A JOHN DEERE COMPANY

WIRTGEN GROUP

PARTS CATALOGUE

01/2026

CLOSE TO OUR CUSTOMERS

Parts?

parts.wirtgen-group.com

WIRTGEN GROUP

CONTENTS

WIRTGEN

CUTTING TOOLS 8

Alternative cutting tools 9
Round-shank picks for recyclers/soil stabilisers 11
Round-shank picks for road milling machines 16

MILLING DRUM 29

Milling drum 30

UNDERCARRIAGE CRAWLER DRIVE 63

Drive sprockets 63
Track pads 67
Crawler unit chains 84
Chain runner 92
Track rollers 95
Idlers 98
Tensioner units 101
Service packages for track pads 106

UNDERCARRIAGE WHEEL DRIVE 119

Tyres 119
Pneumatic tyres 123
Wheels 123
Tubes 128
Solid tyre 128

CONVEYOR UNIT 130

Drive rollers 130
Conveyor belts 135
Guide rollers 143
Idler rollers 150
Return rollers 164
Return rollers 170

MAINTENANCE PARTS 182

Filter packages 182
Maintenance packages 210
Lubricants 228

MILLING DRUM ACCESSORIES 233

Ejectors 233
Toolholder 234

MILLING DRUM HOUSINGS 237

Scraper 237
Wear protection segments 243

MILLING DRUM DRIVE 254

Power belts 254
Belt pulleys 258

TELEMATICS 269

WITOS FleetView 269

EMERGENCY KITS 274

Emergency kits 274
Service case 277

TOOLS 283

Service case 283
Tools for road milling machines 284
Tools for changing round-shank picks 284
Tools for maintenance and assembly 285

VÖGELE

SCREED 288

Rubber cover panel 288
Telescoping tubes 291
Spring steel strip 295
Slide rails and sliding blocks 304
Generators 306
Screed plate 314
Heating rods 342
V-belts 362
Pressure bars 367
Service package for screeds 377
Service package for screed extensions 382
Tamper bar 390
Tamper shield 404

FEED OF MIX 419

Push rollers 419
Conveyor 427
Material hopper 438
Auger drive 462
Sensors for feed of mix 467
Augers 475

UNDERCARRIAGE CRAWLER DRIVE 516

Drive sprockets 516
Track pads 518
Track chains 520
Track rollers 524
Idlers 527
Tensioner units 529

UNDERCARRIAGE WHEEL DRIVE 532

Wheels 532
Tyres 535

GRADE AND SLOPE CONTROL SYSTEM 538

Paver operator's console 538
Sensors 542
Big MultiPlex Ski 548
Leveling Accessories 550
Stringline tensioning system 565

MAINTENANCE PARTS 566

Filter packages 566
Lubricants 578

LIGHTING 583

Light balloons 583

KEYS 590

Control cabinet keys 590
Key rings 591
Tank key 594
Square key 597
Ignition keys 599

TELEMATICS 602

WITOS FleetView 603

EMERGENCY KITS 612

Emergency kits 612

TOOLS 615

Tools for electrical systems 615
Tools for hydraulic systems 616
Service case 617
Other tools 617

CONTENTS

HAMM

MAINTENANCE PARTS 618

Filter sets 619
Maintenance packages 660
Lubricants 715

WATER SYSTEM 720

Sprinkling system parts 720
Water filters 740
Water pumps 743
Driver kits 745

SCRAPER 748

Scraper 748

RUBBER BUFFERS 757

Rubber buffers 757

UNDERCARRIAGE WHEEL DRIVE 761

Earthworks tyres 761
Rock tyres 764
Smooth tyres 766

WINDSCREEN CLEANING 770

Nozzles 770
Wiper arms 772
Wiper blades 780
Wiper motors 786

LIGHTING 794

Drum lighting 794
Position lights 796
Indicator lights 798
Reversing lights 802
Headlights 807
Tail lights 814

TELEMATICS 818

WITOS FleetView 818

EMERGENCY KITS 823

Emergency kits 823

TOOLS 826

Other tools 826

KLEEMANN

CRUSHING TOOLS FOR IMPACT CRUSHERS 834

Impact bars 834
Impact plates 836
Impact wings 838
Blow bars 840

CRUSHING TOOLS FOR JAW CRUSHERS 905

Crusher jaws 906
Cheek plates 916

CRUSHING TOOLS FOR CONE CRUSHERS 922

Crushing shells and crushing cones 923

ABRASION LINING 951

Rubber curtain 952
Chain curtain 953
Wear plates 954

CRUSHER OVERLOAD PROTECTION 978

Pressure plates 978

CRUSHER DRIVE 981

V-belt 981

CONVEYOR UNIT 984

Conveyor belts 985

SCREENING 1052

Wire mesh 1053
Harp screens 1244
Finger screens 1277
Hydraulic folding grates 1278
Anti-clogging ropes 1282
Perforated plates 1283
Slotted grates 1306
Vibrating grates 1311

MAINTENANCE PARTS 1320

Filter sets 1321
Lubricants 1411

EMERGENCY KITS 1416

Emergency kits 1416

DIGITAL SOLUTIONS AND OPERATING 1419

SPECTIVE CONNECT 1419
Full control 1421
Productivity 1422
Performance 1424
Productivity View+ 1425
Performance View+ 1426

CONTENTS

BENNINGHOVEN

LIFTER PLATES	1434
CHAIN, BUCKET ELEVATOR, GEAR RING	1436
INNER PANELS	1438
AGITATOR	1440
FILTER BAGS	1442

A JOHN DEERE COMPANY

WIRTGEN GROUP

HIGHEST QUALITY:
To guarantee your machine a long service life

OPTIMAL AVAILABILITY:
Fast delivery thanks to high warehousing capacities and state-of-the-art logistics

PROFESSIONAL ADVICE:
Service specialists with a high level of technical expertise

FIRST-CLASS SUPPORT:
Fast and reliable order processing

EVERYTHING YOU NEED:
Comprehensive portfolio of product-relevant service and maintenance packages

WIRTGEN GROUP ORIGINAL PARTS

Our quality products ensure your success

Original WIRTGEN

CUTTING TOOLS

Genuine WIRTGEN cutting tools represent an integral part of your machine. As the market leader in this technology, we offer a perfectly harmonised, high-performance cutting system. To ensure that this remains the case long into the future, we continuously make advancements to all the components.

In addition to our high-quality and cost-effective round-shank picks for road milling machines as well as recyclers and stabilisers, we offer alternative cutting tools that perfectly complement our portfolio of round-shank picks.

WIRTGEN cutting tools are synonymous with unparalleled productivity, maximum service life and low operating costs.

> Read more online

ALTERNATIVE CUTTING TOOLS

Alternative cutting tools from WIRTGEN perfectly complement our round-shank picks. While the PCD milling tools are optimally suited for surface layer rehabilitation as well as fine milling applications due to their tool geometry, the WCC PLUS milling tools are designed for mixing compact soils interspersed with large pieces of rock. Both types of tools can be combined with all HT22 toolholder bottom parts.

WD4-12/HT22	Part no. 2805803
Carbide socket: WD4 – Mushroom-shaped carbide socket	
Base diameter tip	12 mm
Tip geometry	F – Flat shape
Base body suitable for tool-holder system	HT22
Number of interlayers	0
Height carbide socket	26.2 mm
Diameter carbide socket	34 mm
Weight per toolbox	16 kg
Quantity per toolbox	5 pc.

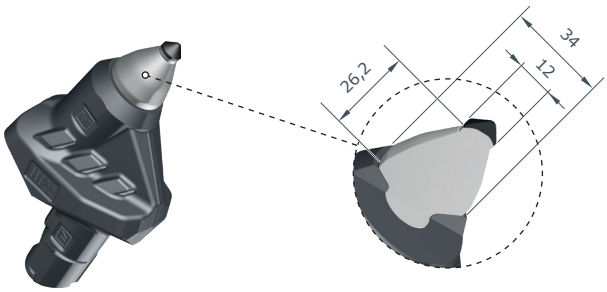

Original WIRTGEN

CUTTING TOOLS

WD4-15/HT22	Part no. 2788432
Carbide socket: WD4 – Mushroom-shaped carbide socket	
Base diameter tip	15 mm
Tip geometry	B – Ballistic shape
Base body suitable for tool-holder system	HT22
Number of interlayers	2
Height carbide socket	24.2 mm
Diameter carbide socket	34 mm
Weight per toolbox	16 kg
Quantity per toolbox	5 pc.

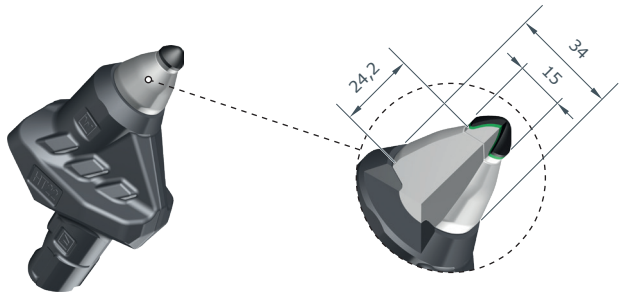

WCC PLUS/HT22	Part no. 3060105
Application	Soil stabilization
Width carbide edge	33 mm
Base body suitable for tool-holder system	HT22
Height carbide edge	30 mm
Depth carbide edge	20 mm
Weight per toolbox	15.46 kg
Quantity per toolbox	4 pc.

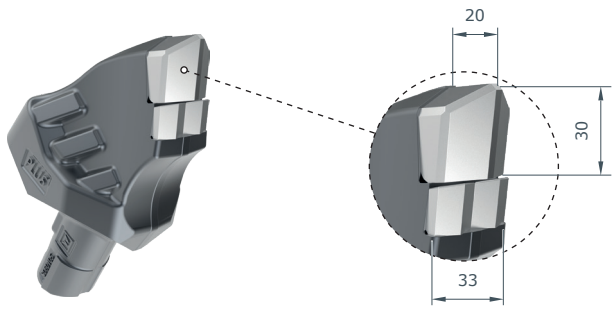

ROUND-SHANK PICKS FOR RECYCLERS/SOIL STABILISERS

GENERATION ***Z²*** round-shank picks for recyclers and stabilisers are designed for high impact loads and, thanks to their optimised carbide tip geometry and composition, are the ideal solution for their areas of application.

W6/20Z²	Part no. 2993005
Carbide tip: W6 – Cap-shaped carbide tip for mixing compact soil	
Base diameter tip	19.5 mm
Diameter shank	20 mm
Generation identification / product characteristic	Z²
For use in toolholder system	HT22 D20, HT11 D20, HT3 D20
Height head	48 mm
Height pick	88 mm
Height tip	17.5 mm
Height wear plate	7 mm
Diameter wear plate	45 mm
Upper diameter tip	11.5 mm
Carbide weight per round-shank pick	37 g
Weight per toolbox	15.3 kg
Quantity per toolbox	40 pc.

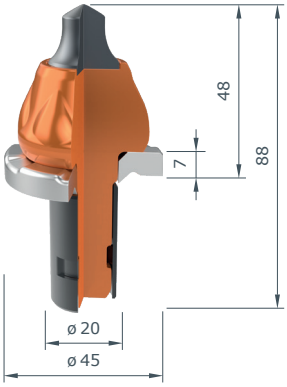

Original WIRTGEN

CUTTING TOOLS

W6C/20Z²	Part no. 2993007
Carbide tip: W6 – Cap-shaped carbide tip for mixing soil with small to medium-sized pieces of rock	
Tip shape: C – Flat carbide tip for greater breaking resistance	
Base diameter tip	19.5 mm
Diameter shank	20 mm
Generation identification / product characteristic	Z²
For use in toolholder system	HT22 D20, HT11 D20, HT3 D20
Height head	40.5 mm
Height pick	80.5 mm
Height tip	10 mm
Height wear plate	7 mm
Diameter wear plate	45 mm
Carbide weight per round-shank pick	24 g
Weight per toolbox	14.5 kg
Quantity per toolbox	40 pc.

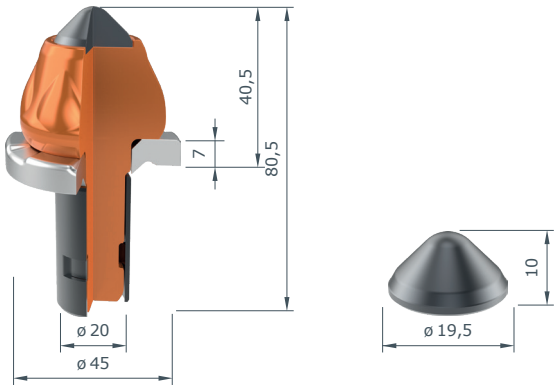

W1-17/22Z²	Part no. 2992994
Carbide tip: W1 – Cylindrical carbide tip for mixing increasingly stony soil	
Base diameter tip	17.5 mm
Diameter shank	22 mm
Generation identification / product characteristic	Z²
For use in toolholder system	HT22 D22, HT11 D22, HT3 D22
Height head	48 mm
Height pick	88 mm
Height tip	28.5 mm
Height wear plate	7 mm
Diameter wear plate	45 mm
Carbide weight per round-shank pick	74 g
Weight per toolbox	17.7 kg
Quantity per toolbox	40 pc.

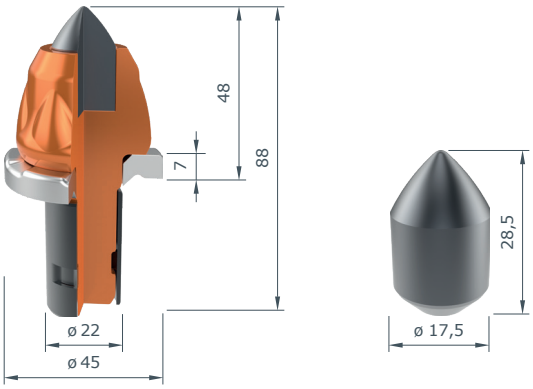

W6/22Z²	Part no. 2992987
Carbide tip: W6 – Cap-shaped carbide tip for mixing compact soil	
Base diameter tip	19.5 mm
Diameter shank	22 mm
Generation identification / product characteristic	Z²
Application	Cold recycling and pulverising, soil stabilising
For use in toolholder system	HT22 D22, HT11 D22, HT3 D22
Height head	48 mm
Height pick	88 mm
Height tip	17.5 mm
Height wear plate	7 mm
Diameter wear plate	45 mm
Upper diameter tip	11.5 mm
Carbide weight per round-shank pick	37 g
Weight per toolbox	16.5 kg
Quantity per toolbox	40 pc.

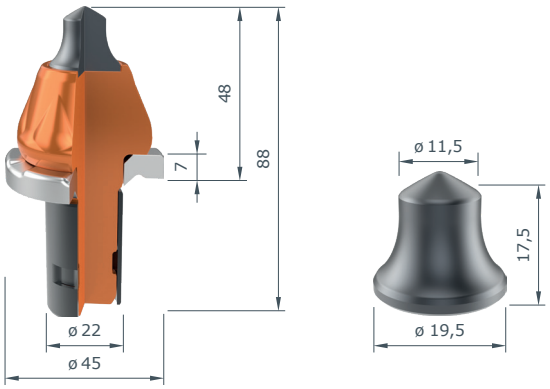

W6C/22Z²	Part no. 2992989
Carbide tip: W6 – Cap-shaped carbide tip for mixing soil with small to medium-sized pieces of rock	
Tip shape: C – Flat carbide tip for greater breaking resistance	
Base diameter tip	19.5 mm
Diameter shank	22 mm
Generation identification / product characteristic	Z²
Application	Soil stabilization
For use in toolholder system	HT22 D22, HT11 D22, HT3 D22
Height head	40.5 mm
Height pick	80.5 mm
Height tip	10 mm
Height wear plate	7 mm
Diameter wear plate	45 mm
Carbide weight per round-shank pick	24 g
Weight per toolbox	15.7 kg
Quantity per toolbox	40 pc.

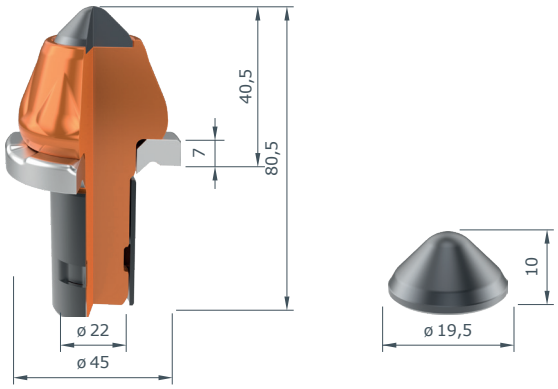

Original WIRTGEN

CUTTING TOOLS

W8/22Z²	Part no. 2992988
Carbide tip: W8 – Cap-shaped carbide tip for mixing compact soil	
Base diameter tip	21.5 mm
Diameter shank	22 mm
Generation identification / product characteristic	Z²
Application	Cold recycling and pulverising, soil stabilising
For use in toolholder system	HT22 D22, HT11 D22, HT3 D22
Height head	48 mm
Height pick	88 mm
Height tip	20 mm
Height wear plate	7 mm
Diameter wear plate	45 mm
Upper diameter tip	11.5 mm
Carbide weight per round-shank pick	47 g
Weight per toolbox	16.5 kg
Quantity per toolbox	40 pc.

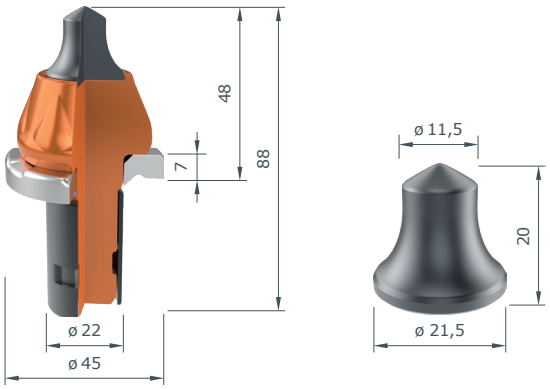

W1-13/22Z²	Part no. 2992998
Carbide tip: W1 – Cylindrical carbide tip for mixing increasingly stony soil	
Base diameter tip	13 mm
Diameter shank	22 mm
Generation identification / product characteristic	Z²
Application	Cold recycling and pulverising, soil stabilising
For use in toolholder system	HT22 D22, HT11 D22, HT3 D22
Height head	48 mm
Height pick	88 mm
Height tip	25 mm
Height wear plate	7 mm
Diameter wear plate	45 mm
Carbide weight per round-shank pick	39 g
Weight per toolbox	16.9 kg
Quantity per toolbox	40 pc.

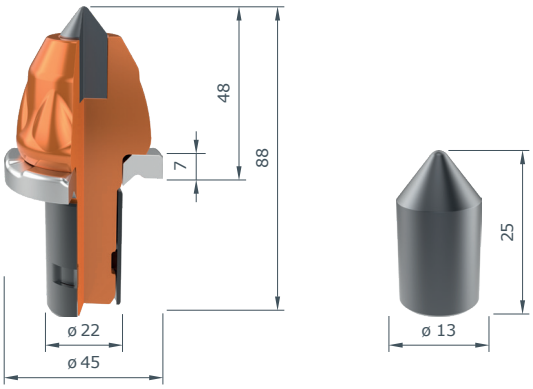

W1-15/22Z²	Part no. 2993003
Carbide tip: W1 – Cylindrical carbide tip for mixing increasingly stony soil	
Base diameter tip	15 mm
Diameter shank	22 mm
Generation identification / product characteristic	Z²
Application	Cold recycling and pulverising, soil stabilising
For use in toolholder system	HT22 D22, HT11 D22, HT3 D22
Height head	48 mm
Height pick	88 mm
Height tip	25 mm
Height wear plate	7 mm
Diameter wear plate	45 mm
Carbide weight per round-shank pick	48 g
Weight per toolbox	17.3 kg
Quantity per toolbox	40 pc.

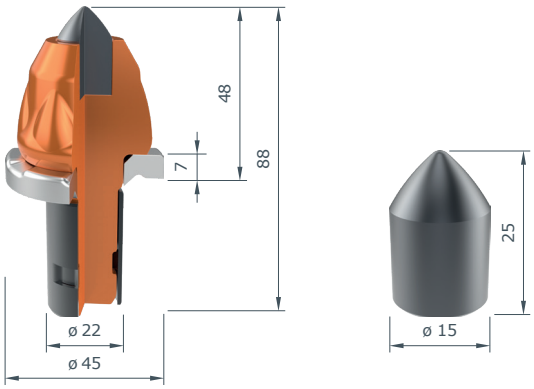

W7/22Z²	Part no. 3063532
Carbide tip: W7 – Cap-shaped carbide tip for mixing cohesive soil	
Base diameter tip	20.5 mm
Diameter shank	22 mm
Generation identification / product characteristic	Z²
Application	Cold recycling and pulverising, soil stabilising
For use in toolholder system	HT22 D22, HT11 D22, HT3 D22
Height head	48 mm
Height pick	88 mm
Height tip	20.5 mm
Height wear plate	7 mm
Diameter wear plate	45 mm
Upper diameter tip	11 mm
Carbide weight per round-shank pick	40 g
Weight per toolbox	16.5 kg
Quantity per toolbox	40 pc.

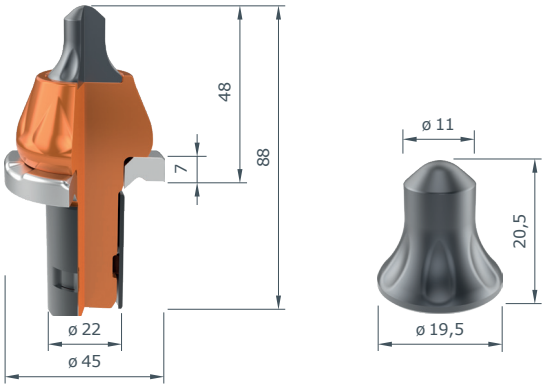

Original WIRTGEN

CUTTING TOOLS

ROUND-SHANK PICKS FOR ROAD MILLING MACHINES

Round-shank picks for road milling machines, including GENERATION ***X²*** round-shank picks, reduce toolholder wear thanks to their innovative, contoured wear plate. This results in the longest possible toolholder service life and a consistent milled surface quality over a longer period of time.

W1-10-G/20X²	Part no. 2642516
Carbide tip: W1 – Cylindrical carbide tip for removing concrete	
Base diameter tip	10 mm
Head shape: G – Pick head with extractor groove to aid in removal	
Diameter shank	20 mm
Generation identification / product characteristic	X²
Height head	48 mm
Height pick	88 mm
Height tip	25 mm
Height wear plate	7 mm
Diameter wear plate	45 mm
Carbide weight per round-shank pick	24 g
Weight per toolbox	15.4 kg
Quantity per toolbox	50 pc.

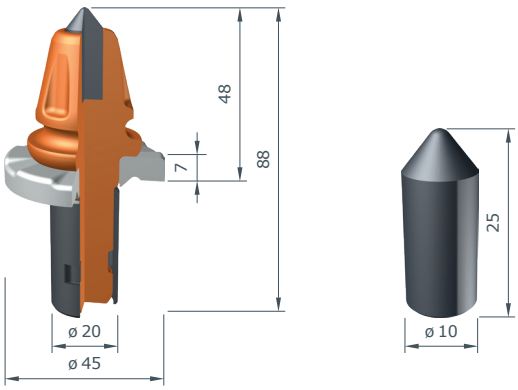

W1-13-G/20X²	Part no. 2642517
Carbide tip: W1 – Cylindrical carbide tip for removing concrete	
Base diameter tip	13 mm
Head shape: G – Pick head with extractor groove to aid in removal	
Diameter shank	20 mm
Generation identification / product characteristic	X²
Height head	48 mm
Height pick	88 mm
Height tip	25 mm
Height wear plate	7 mm
Diameter wear plate	45 mm
Carbide weight per round-shank pick	38 g
Weight per toolbox	16.75 kg
Quantity per toolbox	50 pc.

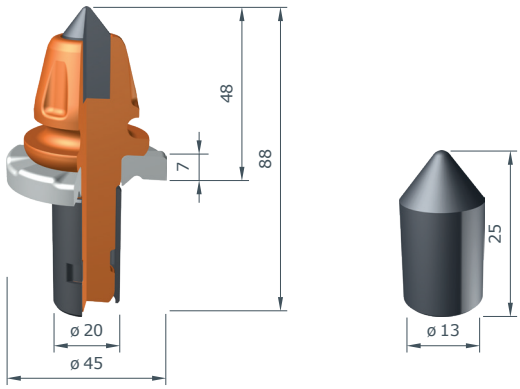

W1-15-G/20X²	Part no. 2642518
Carbide tip: W1 – Cylindrical carbide tip for removing concrete	
Base diameter tip	15 mm
Head shape: G – Pick head with extractor groove to aid in removal	
Diameter shank	20 mm
Generation identification / product characteristic	X²
Height head	48 mm
Height pick	88 mm
Height tip	24 mm
Height wear plate	7 mm
Diameter wear plate	45 mm
Carbide weight per round-shank pick	47 g
Weight per toolbox	16.95 kg
Quantity per toolbox	50 pc.

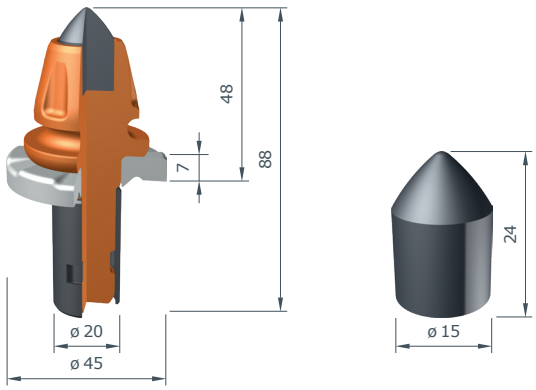

Original WIRTGEN

CUTTING TOOLS

W1-8/13	Part no. 193701
Carbide tip: W1 – Cylindrical carbide tip for removing concrete	
Base diameter tip	8 mm
Diameter shank	13 mm
Height head	28 mm
Height pick	54 mm
Height tip	15 mm
Carbide weight per round-shank pick	8.9 g
Weight per toolbox	19.1 kg
Quantity per toolbox	200 pc.

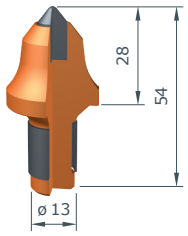

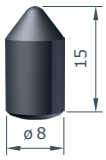

W4-G/20X²	Part no. 2642519
Carbide tip: W4 – Cap-shaped carbide tip for removing asphalt layers	
Base diameter tip	16 mm
Head shape: G – Pick head with extractor groove to aid in removal	
Diameter shank	20 mm
Generation identification / product characteristic	X²
Height head	48 mm
Height pick	88 mm
Height tip	16 mm
Height wear plate	7 mm
Diameter wear plate	45 mm
Upper diameter tip	8.5 mm
Carbide weight per round-shank pick	20 g
Weight per toolbox	14.85 kg
Quantity per toolbox	50 pc.

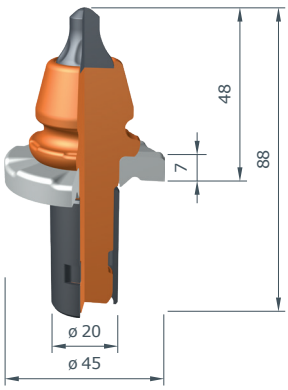

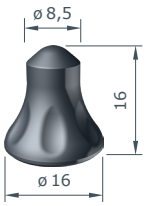

W4/13	Part no. 182598
Carbide tip: W4 – Cap-shaped carbide tip for removing asphalt layers	
Base diameter tip	16 mm
Diameter shank	13 mm
Height head	28 mm
Height pick	54 mm
Height tip	16 mm
Upper diameter tip	8.5 mm
Carbide weight per round-shank pick	19.7 g
Weight per toolbox	19.3 kg
Quantity per toolbox	200 pc.

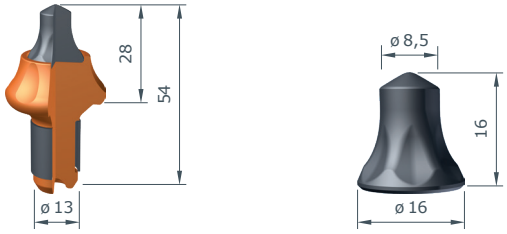

W5-G/20X²	Part no. 2642520
Carbide tip: W5 – Cap-shaped carbide tip for removing asphalt layers	
Base diameter tip	17.5 mm
Head shape: G – Pick head with extractor groove to aid in removal	
Diameter shank	20 mm
Generation identification / product characteristic	X²
Height head	48 mm
Height pick	88 mm
Height tip	17.5 mm
Height wear plate	7 mm
Diameter wear plate	45 mm
Upper diameter tip	9.5 mm
Carbide weight per round-shank pick	26 g
Weight per toolbox	15.75 kg
Quantity per toolbox	50 pc.

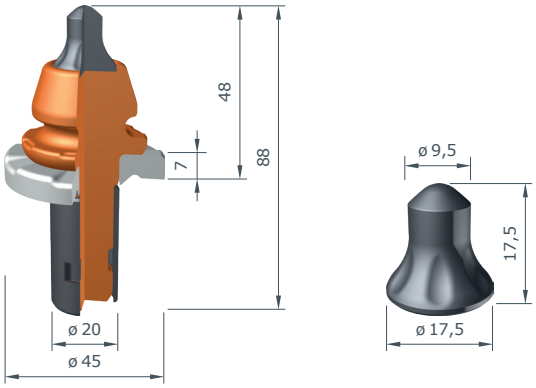

Original WIRTGEN

CUTTING TOOLS

W5/20X²	Part no. 2642521
Carbide tip: W5 – Cap-shaped carbide tip for removing asphalt layers	
Base diameter tip	17.5 mm
Diameter shank	20 mm
Generation identification / product characteristic	X²
Height head	48 mm
Height pick	88 mm
Height tip	17.5 mm
Height wear plate	7 mm
Diameter wear plate	45 mm
Upper diameter tip	9.5 mm
Carbide weight per round-shank pick	26 g
Weight per toolbox	15.9 kg
Quantity per toolbox	50 pc.

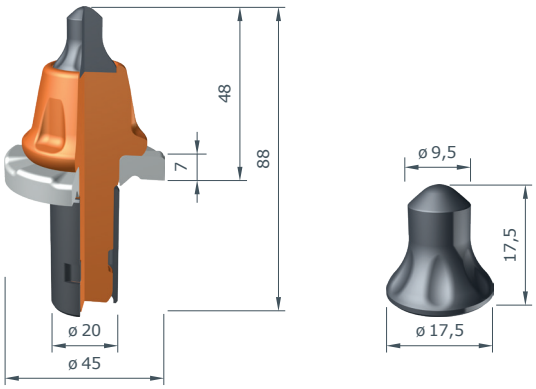

W6-G/20X²	Part no. 2642522
Carbide tip: W6 – Cap-shaped carbide tip for removing asphalt layers	
Base diameter tip	19 mm
Head shape: G – Pick head with extractor groove to aid in removal	
Diameter shank	20 mm
Generation identification / product characteristic	X²
Height head	48 mm
Height pick	88 mm
Height tip	17.5 mm
Height wear plate	7 mm
Diameter wear plate	45 mm
Upper diameter tip	10.5 mm
Carbide weight per round-shank pick	30 g
Weight per toolbox	16.45 kg
Quantity per toolbox	50 pc.

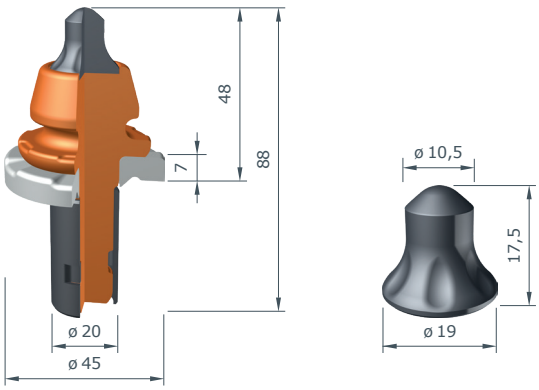

W6/20X²	Part no. 2642523
Carbide tip: W6 – Cap-shaped carbide tip for removing asphalt layers	
Base diameter tip	19 mm
Diameter shank	20 mm
Generation identification / product characteristic	X²
Height head	48 mm
Height pick	88 mm
Height tip	17.5 mm
Height wear plate	7 mm
Diameter wear plate	45 mm
Upper diameter tip	10.5 mm
Carbide weight per round-shank pick	30 g
Weight per toolbox	17 kg
Quantity per toolbox	50 pc.

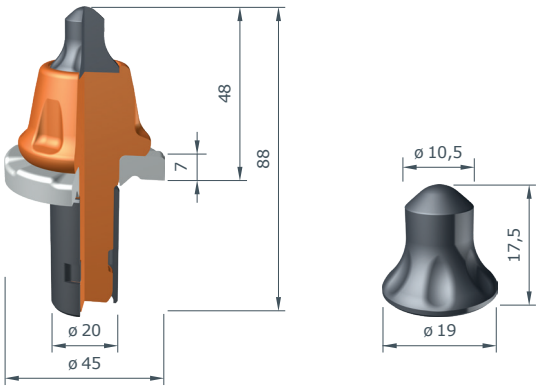

W6L-G/20X²	Part no. 2642524
Carbide tip: W6 – Cap-shaped carbide tip for removing asphalt layers	
Tip shape: L – Long carbide tip for long-lasting cutting performance	
Base diameter tip	19 mm
Head shape: G – Pick head with extractor groove to aid in removal	
Diameter shank	20 mm
Generation identification / product characteristic	X²
Height head	48 mm
Height pick	88 mm
Height tip	19.5 mm
Height wear plate	7 mm
Diameter wear plate	45 mm
Upper diameter tip	10.5 mm
Carbide weight per round-shank pick	33 g
Weight per toolbox	16.15 kg
Quantity per toolbox	50 pc.

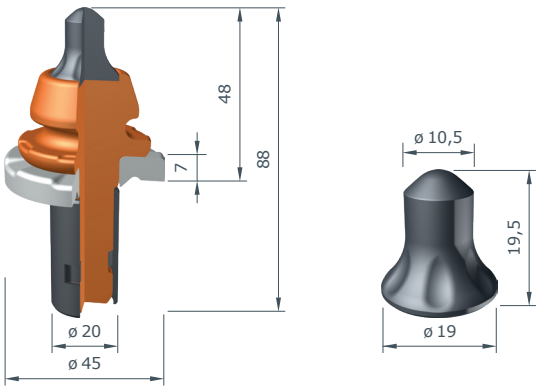

Original WIRTGEN

CUTTING TOOLS

W6L/20X²	Part no. 2642525
Carbide tip: W6 – Cap-shaped carbide tip for removing asphalt layers	
Tip shape: L – Long carbide tip for long-lasting cutting performance	
Base diameter tip	19 mm
Diameter shank	20 mm
Generation identification / product characteristic	X²
Height head	48 mm
Height pick	88 mm
Height tip	19.5 mm
Height wear plate	7 mm
Diameter wear plate	45 mm
Upper diameter tip	10.5 mm
Carbide weight per round-shank pick	33 g
Weight per toolbox	16.6 kg
Quantity per toolbox	50 pc.

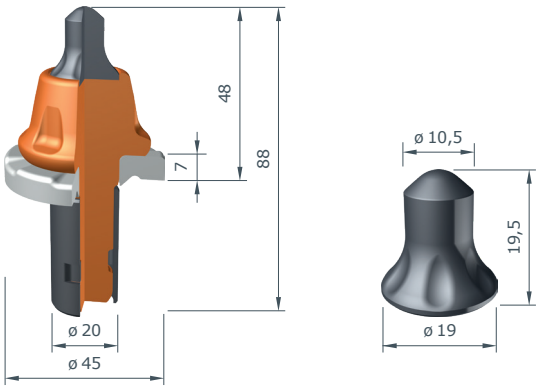

W6M/20X²	Part no. 2642526
Carbide tip: W6 – Cap-shaped carbide tip for removing asphalt layers	
Tip shape: M - Massive carbide tip for greater breaking resistance	
Base diameter tip	19 mm
Diameter shank	20 mm
Generation identification / product characteristic	X²
Height head	48.5 mm
Height pick	88.5 mm
Height tip	18 mm
Height wear plate	7 mm
Diameter wear plate	45 mm
Upper diameter tip	11.5 mm
Carbide weight per round-shank pick	36 g
Weight per toolbox	17.3 kg
Quantity per toolbox	50 pc.

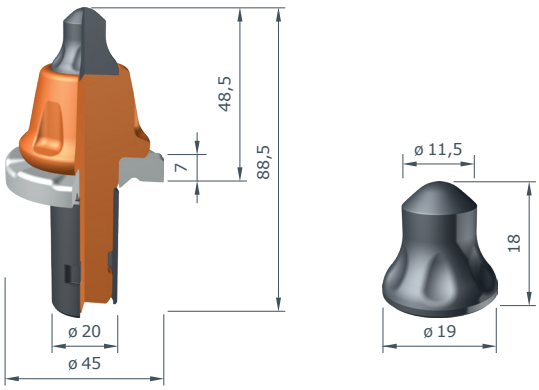

W6ML-G/20X²	Part no. 2642528
Carbide tip: W6 – Cap-shaped carbide tip for removing asphalt layers	
Tip shape: M – Massive carbide tip for greater breaking resistance/ L – Long carbide tip for long-lasting cutting performance	
Base diameter tip	19 mm
Head shape: G – Pick head with extractor groove to aid in removal	
Diameter shank	20 mm
Generation identification / product characteristic	X²
Height head	49.5 mm
Height pick	89.5 mm
Height tip	21 mm
Height wear plate	7 mm
Diameter wear plate	45 mm
Upper diameter tip	11.5 mm
Carbide weight per round-shank pick	41 g
Weight per toolbox	16.5 kg
Quantity per toolbox	50 pc.

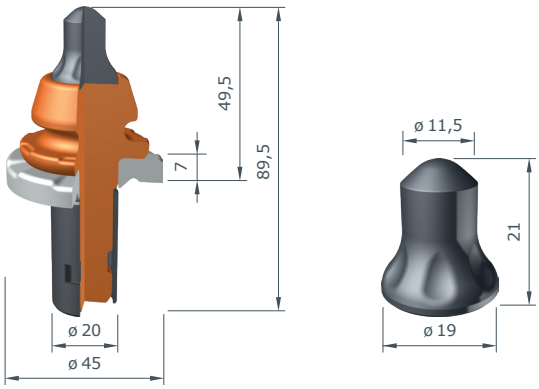

W6ML/20X²	Part no. 2642529
Carbide tip: W6 – Cap-shaped carbide tip for removing asphalt layers	
Tip shape: M – Massive carbide tip for greater breaking resistance/ L – Long carbide tip for long-lasting cutting performance	
Base diameter tip	19 mm
Diameter shank	20 mm
Generation identification / product characteristic	X²
Height head	49.5 mm
Height pick	89.5 mm
Height tip	21 mm
Height wear plate	7 mm
Diameter wear plate	45 mm
Upper diameter tip	11.5 mm
Carbide weight per round-shank pick	41 g
Weight per toolbox	17 kg
Quantity per toolbox	50 pc.

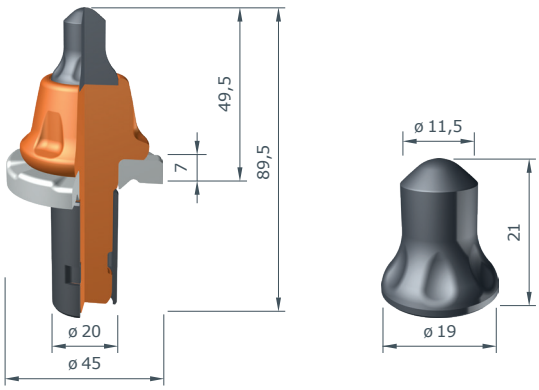

W7-G/20X²	Part no. 2642530
Carbide tip: W7 – Cap-shaped carbide tip for removing asphalt layers	
Base diameter tip	20.5 mm
Head shape: G – Pick head with extractor groove to aid in removal	
Diameter shank	20 mm
Generation identification / product characteristic	X²
Height head	48 mm
Height pick	88 mm
Height tip	20.5 mm
Height wear plate	7 mm
Diameter wear plate	45 mm
Upper diameter tip	11 mm
Carbide weight per round-shank pick	41 g
Weight per toolbox	16.85 kg
Quantity per toolbox	50 pc.

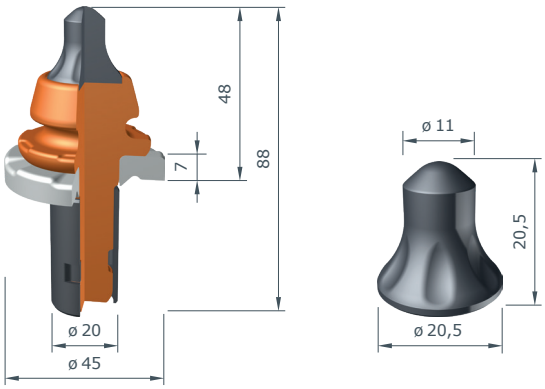

W7/20X²	Part no. 2642532
Carbide tip: W7 – Cap-shaped carbide tip for removing asphalt layers	
Base diameter tip	20.5 mm
Diameter shank	20 mm
Generation identification / product characteristic	X²
Height head	48 mm
Height pick	88 mm
Height tip	20.5 mm
Height wear plate	7 mm
Diameter wear plate	45 mm
Upper diameter tip	11 mm
Carbide weight per round-shank pick	41 g
Weight per toolbox	17 kg
Quantity per toolbox	50 pc.

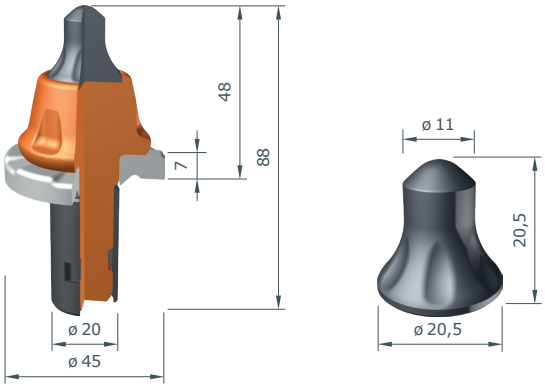

W7M/20X²	Part no. 2642534
Carbide tip: W7 – Cap-shaped carbide tip for removing asphalt layers	
Tip shape: M - Massive carbide tip for greater breaking resistance	
Base diameter tip	20.5 mm
Diameter shank	20 mm
Generation identification / product characteristic	X²
Height head	48 mm
Height pick	88 mm
Height tip	20.5 mm
Height wear plate	7 mm
Diameter wear plate	45 mm
Upper diameter tip	11.5 mm
Carbide weight per round-shank pick	44 g
Weight per toolbox	17.15 kg
Quantity per toolbox	50 pc.

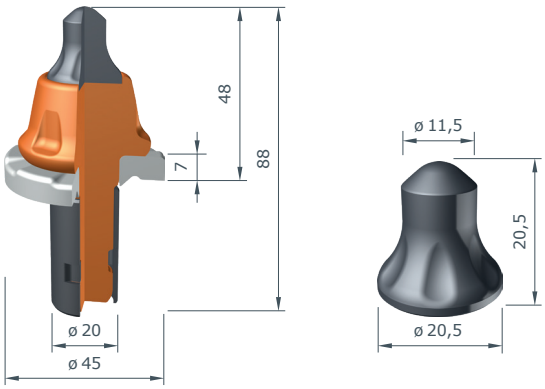

W8-G/20X²	Part no. 2642535
Carbide tip: W8 – Cap-shaped carbide tip for removing asphalt layers	
Base diameter tip	22 mm
Head shape: G – Pick head with extractor groove to aid in removal	
Diameter shank	20 mm
Generation identification / product characteristic	X²
Height head	48 mm
Height pick	88 mm
Height tip	21.5 mm
Height wear plate	7 mm
Diameter wear plate	45 mm
Upper diameter tip	11.7 mm
Carbide weight per round-shank pick	48 g
Weight per toolbox	16.5 kg
Quantity per toolbox	50 pc.

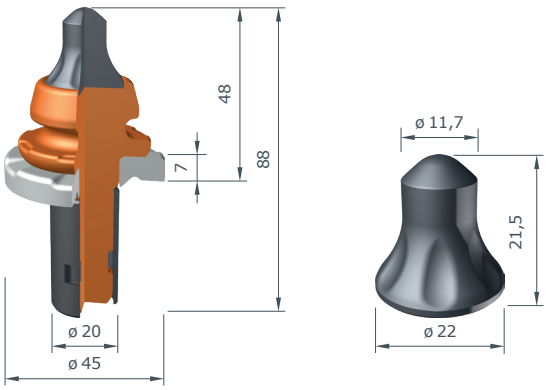

Original WIRTGEN

CUTTING TOOLS

W8/20X²	Part no. 2642537
Carbide tip: W8 – Cap-shaped carbide tip for removing asphalt layers	
Base diameter tip	22 mm
Diameter shank	20 mm
Generation identification / product characteristic	X²
Height head	48 mm
Height pick	88 mm
Height tip	21.5 mm
Height wear plate	7 mm
Diameter wear plate	45 mm
Upper diameter tip	11.7 mm
Carbide weight per round-shank pick	48 g
Weight per toolbox	17.3 kg
Quantity per toolbox	50 pc.

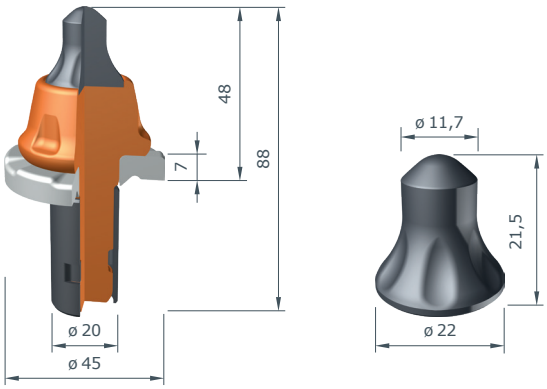

W1-10-NG/20X²	Part no. 2642539
Carbide tip: W1 – Cylindrical carbide tip for removing concrete	
Base diameter tip	10 mm
Head shape: NG – Slim pick head with extractor groove to aid in removal	
Diameter shank	20 mm
Generation identification / product characteristic	X²
Height head	48 mm
Height pick	88 mm
Height tip	25 mm
Height wear plate	7 mm
Diameter wear plate	45 mm
Carbide weight per round-shank pick	24 g
Weight per toolbox	14.05 kg
Quantity per toolbox	50 pc.

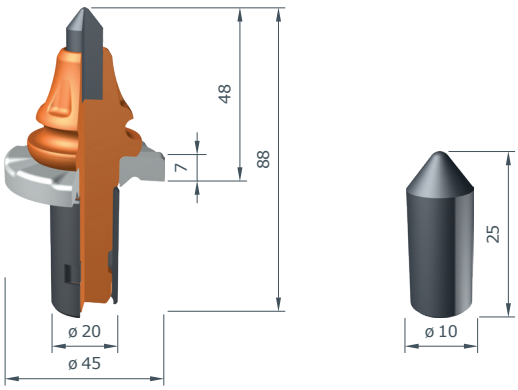

W1-13/22C²	Part no. 2832127
Carbide tip: W1 – Cylindrical carbide tip for removing concrete	
Base diameter tip	13 mm
Diameter shank	22 mm
Generation identification / product characteristic	C²
Height head	48 mm
Height pick	88 mm
Height tip	25 mm
Height wear plate	7 mm
Diameter wear plate	45 mm
Carbide weight per round-shank pick	38 g
Weight per toolbox	16.66 kg
Quantity per toolbox	40 pc.

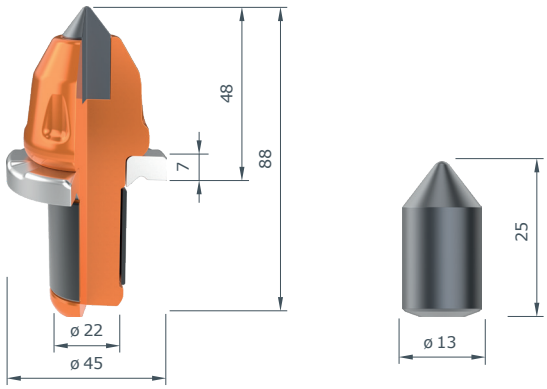

W1-17/22C²	Part no. 2832135
Carbide tip: W1 – Cylindrical carbide tip for removing concrete	
Base diameter tip	17 mm
Diameter shank	22 mm
Generation identification / product characteristic	C²
Height head	48 mm
Height pick	88 mm
Height tip	24 mm
Height wear plate	7 mm
Diameter wear plate	45 mm
Carbide weight per round-shank pick	74 g
Weight per toolbox	16.66 kg
Quantity per toolbox	40 pc.

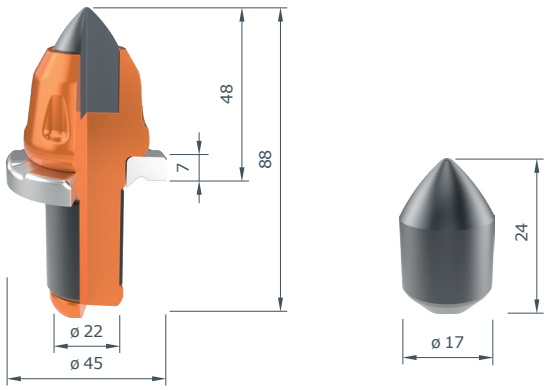

Original WIRTGEN

CUTTING TOOLS

W7M/22C²	Part no. 2832125
Carbide tip: W7 – Cap-shaped carbide tip for removing asphalt layers	
Tip shape: M - Massive carbide tip for greater breaking resistance	
Base diameter tip	20.5 mm
Diameter shank	22 mm
Generation identification / product characteristic	C²
Height head	48 mm
Height pick	88 mm
Height tip	20.5 mm
Height wear plate	7 mm
Diameter wear plate	45 mm
Upper diameter tip	11.5 mm
Carbide weight per round-shank pick	44 g
Weight per toolbox	15.82 kg
Quantity per toolbox	40 pc.

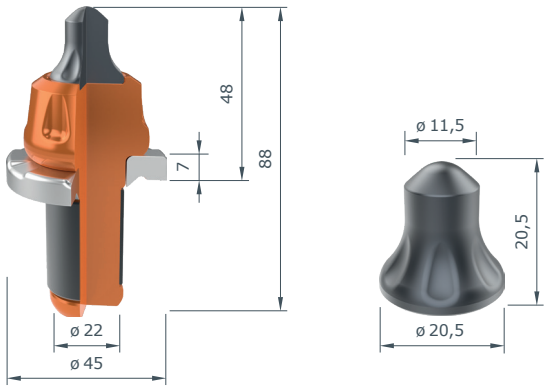

MILLING DRUM

The heart of the world-renowned WIRTGEN road milling machines are the milling drums, designed and manufactured at the Windhagen factory. WIRTGEN has always invested in its key technology – cutting technology – to the benefit of its customers. Cutting, conveying, ejecting – genuine WIRTGEN milling drums not only meet your highest demands in terms of quality and performance, but in conjunction with the other WIRTGEN cutting technology components, also ensure that your machine achieves its maximum performance.

> Read more online

Original WIRTGEN

MILLING DRUM

MILLING DRUM

In order to fully leverage the machine's potential, WIRTGEN offers the perfect milling drum for every application.

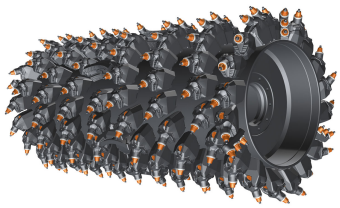

MILLING DRUM										
Series code	Serial code	Part	Milling drum variant	Milling width	Milling width without outlet	Milling width outlet	Line spacing	Number of tool operations per revolution	Maximum milling depth	Part no.
W 35 DC	0403	Fine milling drum	Standard	500 mm			6 mm	1	50 mm	193418
			Standard	350 mm			6 mm	1	50 mm	187267
		Milling drum	Standard	500 mm			15 mm	1	110 mm	2430055
			Standard	350 mm			15 mm	1	110 mm	2430058
		Micro-fine milling drum	Standard	300 mm	250 mm	2x25 mm	3 mm	1	30 mm	195053
			Standard	500 mm	450 mm	2x25 mm	3 mm	1	30 mm	193419
			Standard	200 mm	150 mm	2x25 mm	3 mm	1	30 mm	193416
			Standard	350 mm	300 mm	2x25 mm	3 mm	1	30 mm	193337
			Standard	250 mm	200 mm	2x25 mm	3 mm	1	30 mm	195052
			Standard	350 mm			3 mm	1	30 mm	187266
		Cutting wheel	Standard	80 mm					110 mm	188358
W 35 Ri	0703	Fine milling drum	Standard	500 mm			6 mm	1	50 mm	193418
			Standard	350 mm			6 mm	1	50 mm	187267
		Milling drum	Standard	500 mm			15 mm	1	110 mm	2430055
			Standard	350 mm			15 mm	1	110 mm	2430058
		Micro-fine milling drum	Standard	350 mm			3 mm	1	30 mm	187266
			Standard	250 mm	200 mm	2x25 mm	3 mm	1	30 mm	195052
			Standard	300 mm	250 mm	2x25 mm	3 mm	1	30 mm	195053
			Standard	200 mm	150 mm	2x25 mm	3 mm	1	30 mm	193416

MILLING DRUM

Series code	Serial code	Part	Milling drum variant	Milling width	Milling width without outlet	Milling width outlet	Line spacing	Number of tool operations per revolution	Maximum milling depth	Part no.
W 35 Ri	0703	Micro-fine milling drum	Standard	350 mm	300 mm	2x25 mm	3 mm	1	30 mm	193337
			Standard	500 mm	450 mm	2x25 mm	3 mm	1	30 mm	193419
		Cutting wheel	Standard	80 mm					110 mm	188358
W 500	0605	Fine milling drum	Standard	500 mm			6 mm	1	50 mm	89502
		Milling drum	Standard	500 mm			15 mm	1	160 mm	2400763
		Cutting wheel	Standard	80 mm					220 mm	56855
W 50	0805, 1005	Fine milling drum	Standard	500 mm			6 mm	1	50 mm	172199
		Milling drum	Standard	300 mm			15 mm	1	160 mm	2413491
			Standard	500 mm			15 mm	1	160 mm	2400764
			Standard	400 mm			15 mm	1	160 mm	2413492
			Standard	500 mm			3 mm	1	30 mm	177011
			Standard	500 mm			20 mm	1	160 mm	2413941
		Gutter milling drum	Standard	500 mm			15 mm	1	50 mm	176725
		Micro-fine milling drum	Standard	300 mm			3 mm	1	30 mm	180542
			Standard	500 mm	450 mm	2x25 mm	6 mm	1	50 mm	180541
			Standard	350 mm	300 mm	2x25 mm	3 mm	1	30 mm	172201
			Standard	500 mm			3 mm	1	30 mm	179276
		Cutting wheel	Standard	80 mm					160 mm	172197
W 50 DC	0905	Fine milling drum	Standard	500 mm			6 mm	1	50 mm	177179
			Standard	500 mm	450 mm	2x25 mm	6 mm	2	30 mm	183191
		Milling drum	Standard	400 mm			15 mm	1	210 mm	2334390
			Standard	500 mm			15 mm	1	210 mm	2334391

Original WIRTGEN

MILLING DRUM

MILLING DRUM										
Series code	Serial code	Part	Milling drum variant	Milling width	Milling width without outlet	Milling width outlet	Line spacing	Number of tool operations per revolution	Maximum milling depth	Part no.
W 50 DC	0905	Milling drum	Standard	300 mm			15 mm	1	210 mm	2334386
		Micro-fine milling drum	Standard	500 mm			3 mm	1	30 mm	178362
		Cutting wheel	Standard	80 mm					300 mm	179301
			Standard	80 mm					210 mm	183119
W 50 DCi	1205	Fine milling drum	Standard	500 mm			6 mm	1	50 mm	177179
			Standard	500 mm	450 mm	2x25 mm	6 mm	2	30 mm	183191
		Milling drum	Standard	300 mm			15 mm	1	210 mm	2334386
			Standard	500 mm			15 mm	1	210 mm	2334391
			Standard	400 mm			15 mm	1	210 mm	2334390
		Micro-fine milling drum	Standard	500 mm			3 mm	1	30 mm	178362
		Cutting wheel	Standard	80 mm					300 mm	179301
			Standard	80 mm					210 mm	183119
W 50 R	1405	Fine milling drum	Standard	500 mm			6 mm	1	50 mm	177179
		Milling drum	Standard	500 mm			15 mm	1	210 mm	2334391
			Standard	500 mm			20 mm	1	210 mm	2389391
			Standard	300 mm			15 mm	1	210 mm	2334386
			Standard	400 mm			15 mm	1	210 mm	2334390
		Micro-fine milling drum	Standard	500 mm			3 mm	1	30 mm	178362
		Cutting wheel	Standard	80 mm					300 mm	179301
			Standard	80 mm					210 mm	183119

MILLING DRUM

Series code	Serial code	Part	Milling drum variant	Milling width	Milling width without outlet	Milling width outlet	Line spacing	Number of tool operations per revolution	Maximum milling depth	Part no.
W 50 Ri	1505	Fine milling drum	Standard	500 mm			6 mm	1	50 mm	177179
		Milling drum	Standard	500 mm			15 mm	1	210 mm	2334391
			Standard	500 mm			20 mm	1	210 mm	2389391
			Standard	300 mm			15 mm	1	210 mm	2334386
			Standard	400 mm			15 mm	1	210 mm	2334390
		Micro-fine milling drum	Standard	500 mm			3 mm	1	30 mm	178362
		Cutting wheel	Standard	80 mm					300 mm	179301
			Standard	80 mm					210 mm	183119
W 50 H	1305	Fine milling drum	Standard	500 mm			6 mm	1	50 mm	2487367
			Standard	400 mm			6 mm	1	50 mm	2487917
		Milling drum	Standard	350 mm			15 mm	1	150 mm	2487332
			Standard	500 mm			15 mm	1	180 mm	2544519
		Gutter milling drum	Standard	300 mm			6 mm	1	30 mm	2488800
		Micro-fine milling drum	Standard	200 mm			3 mm	1	30 mm	2487364
		Cutting wheel	Standard	80 mm					135 mm	2487369
W 55 H	1305	Fine milling drum	Standard	500 mm			6 mm	1	50 mm	2487367
			Standard	400 mm			6 mm	1	50 mm	2487917
		Milling drum	Standard	350 mm			15 mm	1	150 mm	2487332
			Standard	500 mm			15 mm	1	180 mm	2544519
		Gutter milling drum	Standard	300 mm			6 mm	1	30 mm	2488800

Original WIRTGEN

MILLING DRUM

MILLING DRUM										
Series code	Serial code	Part	Milling drum variant	Milling width	Milling width without outlet	Milling width outlet	Line spacing	Number of tool operations per revolution	Maximum milling depth	Part no.
W 55 H	1305	Microfine milling drum	Standard	200 mm			3 mm	1	30 mm	2487364
		Cutting wheel	Standard	80 mm					135 mm	2487369
W 60 R	1405	Milling drum	Standard	600 mm			15 mm	1	210 mm	2334395
			Standard	600 mm			6 mm	1	50 mm	2389394
			Standard	600 mm			20 mm	1	210 mm	2389396
		Cutting wheel	Standard	80 mm					210 mm	2389537
W 60 Ri	1505	Milling drum	Standard	600 mm			15 mm	1	210 mm	2334395
			Standard	600 mm			6 mm	1	50 mm	2389394
			Standard	600 mm			20 mm	1	210 mm	2389396
		Cutting wheel	Standard	80 mm					210 mm	2389537
W 60	0910	Milling drum	Standard	600 mm			15 mm	1	300 mm	2311471
			Standard	500 mm			15 mm	1	300 mm	2317307
			Standard	400 mm			15 mm	1	300 mm	2317256
W 60i	1210	Milling drum	Standard	600 mm			15 mm	1	300 mm	2311471
			Standard	500 mm			15 mm	1	300 mm	2317307
			Standard	400 mm			15 mm	1	300 mm	2317256
W 100	0910	Fine milling drum	FCS	1000 mm			8 mm	1	100 mm	2311438
			FCS	1000 mm			6 mm	2	30 mm	2062033
		Milling drum	FCS	1000 mm			18 mm	1	300 mm	2492794
			Standard	1000 mm			15 mm	1	300 mm	2311427
			FCS	1000 mm			15 mm	1	300 mm	2311434
W 100i	1210	Fine milling drum	FCS	1000 mm			8 mm	1	100 mm	2311438
			FCS	1000 mm			6 mm	2	30 mm	2062033
		Milling drum	FCS	1000 mm			18 mm	1	300 mm	2492794

MILLING DRUM

Series code	Serial code	Part	Milling drum variant	Milling width	Milling width without outlet	Milling width outlet	Line spacing	Number of tool operations per revolution	Maximum milling depth	Part no.
W 100i	1210	Milling drum	Standard	1000 mm			15 mm	1	300 mm	2311427
			FCS	1000 mm			15 mm	1	300 mm	2311434
W 100 H	1910	Milling drum	Standard	1300 mm			18 mm	1	180 mm	2314405
			Standard	1000 mm			18 mm	1	180 mm	2314400
W 100 R	1510	Fine milling drum	FCS	1000 mm			8 mm	1	100 mm	2311438
			FCS	1000 mm			6 mm	2	30 mm	2062033
		Milling drum	FCS	1000 mm			18 mm	1	300 mm	2492794
			Standard	1000 mm			15 mm	1	300 mm	2311427
			FCS	1000 mm			15 mm	1	300 mm	2311434
W 100 Ri	1610	Fine milling drum	FCS	1000 mm			8 mm	1	100 mm	2311438
			FCS	1000 mm			6 mm	2	30 mm	2062033
		Milling drum	FCS	1000 mm			18 mm	1	300 mm	2492794
			Standard	1000 mm			15 mm	1	300 mm	2311427
			FCS	1000 mm			15 mm	1	300 mm	2311434
W 100 H	1410	Milling drum	Standard	1300 mm			18 mm	1	180 mm	2314405
			Standard	1000 mm			18 mm	1	180 mm	2314400
W 120 R	1510	Fine milling drum	FCS	1200 mm			8 mm	1	100 mm	2494907
			FCS	1200 mm			6 mm	2	30 mm	2494908
		Milling drum	Standard	1200 mm			18 mm	1	300 mm	2510269
			FCS	1200 mm			18 mm	1	300 mm	2494906
W 120 Ri	1610	Fine milling drum	FCS	1200 mm			8 mm	1	100 mm	2494907
			FCS	1200 mm			6 mm	2	30 mm	2494908
		Milling drum	Standard	1200 mm			18 mm	1	300 mm	2510269
			FCS	1200 mm			18 mm	1	300 mm	2494906
W 130 H	1410, 1910	Milling drum	Standard	1300 mm			18 mm	1	180 mm	2314405

Original WIRTGEN

MILLING DRUM

MILLING DRUM										
Series code	Serial code	Part	Milling drum variant	Milling width	Milling width without outlet	Milling width outlet	Line spacing	Number of tool operations per revolution	Maximum milling depth	Part no.
W 130 H	1410, 1910	Milling drum	Standard	1000 mm			18 mm	1	180 mm	2314400
W 1000 F	0710	Fine milling drum	FCS	1000 mm			8 mm	1	100 mm	2338529
			Standard	1000 mm			6 mm	2	30 mm	161484
			FCS	1000 mm			6 mm	2	30 mm	150396
			FCS	1000 mm			6 mm	1	50 mm	2345886
			Standard	1000 mm			8 mm	1	100 mm	2345885
		Milling drum	FCS	1000 mm			15 mm	1	315 mm	2338521
			Standard	1000 mm			15 mm	1	315 mm	2341969
			FCS	300 mm			12 mm	1	290 mm	2338528
			FCS	500 mm			15 mm	1	290 mm	2338527
			FCS	600 mm			12 mm	1	290 mm	2338525
			FCS	750 mm			15 mm	1	290 mm	2338523
			FCS	900 mm			15 mm	1	290 mm	2338522
W 100 F	0810	Fine milling drum	FCS	1000 mm			8 mm	1	100 mm	2308204
			FCS	1000 mm			6 mm	2	30 mm	2062046
		Milling drum	FCS	500 mm			15 mm	1	290 mm	2308183
			Standard	1000 mm			15 mm	1	320 mm	2308577
			FCS	1000 mm			25 mm	1	320 mm	2308540
			FCS	1000 mm			18 mm	1	320 mm	2308571
			FCS	600 mm			12 mm	1	290 mm	2308151
			FCS	1000 mm			15 mm	1	320 mm	2308077
			FCS	300 mm			12 mm	1	290 mm	2308192
W 100 Fi	1310	Fine milling drum	FCS	1000 mm			8 mm	1	100 mm	2308204
			FCS	1000 mm			6 mm	2	30 mm	2062046
		Milling drum	FCS	500 mm			15 mm	1	290 mm	2308183

MILLING DRUM

Series code	Serial code	Part	Milling drum variant	Milling width	Milling width without outlet	Milling width outlet	Line spacing	Number of tool operations per revolution	Maximum milling depth	Part no.
W 100 Fi	1310	Milling drum	Standard	1000 mm			15 mm	1	320 mm	2308577
			FCS	1000 mm			25 mm	1	320 mm	2308540
			FCS	1000 mm			18 mm	1	320 mm	2308571
			FCS	600 mm			12 mm	1	290 mm	2308151
			FCS	1000 mm			15 mm	1	320 mm	2308077
			FCS	300 mm			12 mm	1	290 mm	2308192
W 100 CF	1710	Fine milling drum	FCS	1000 mm			8 mm	1	100 mm	2308204
			FCS	1000 mm			6 mm	2	30 mm	2062046
		Milling drum	FCS	500 mm			15 mm	1	290 mm	2308183
			Standard	1000 mm			15 mm	1	320 mm	2308577
			FCS	1000 mm			25 mm	1	320 mm	2308540
			FCS	1000 mm			18 mm	1	320 mm	2308571
			FCS	600 mm			12 mm	1	290 mm	2308151
			FCS	1000 mm			15 mm	1	320 mm	2308077
			FCS	300 mm			12 mm	1	290 mm	2308192
W 100 CFi	1810	Fine milling drum	FCS	1000 mm			8 mm	1	100 mm	2308204
			FCS	1000 mm			6 mm	2	30 mm	2062046
		Milling drum	FCS	500 mm			15 mm	1	290 mm	2308183
			Standard	1000 mm			15 mm	1	320 mm	2308577
			FCS	1000 mm			25 mm	1	320 mm	2308540
			FCS	1000 mm			18 mm	1	320 mm	2308571
			FCS	600 mm			12 mm	1	290 mm	2308151
			FCS	1000 mm			15 mm	1	320 mm	2308077
			FCS	300 mm			12 mm	1	290 mm	2308192

Original WIRTGEN

MILLING DRUM

MILLING DRUM										
Series code	Serial code	Part	Milling drum variant	Milling width	Milling width without outlet	Milling width outlet	Line spacing	Number of tool operations per revolution	Maximum milling depth	Part no.
W 1200 F	0710	Fine milling drum	FCS	1200 mm			8 mm	1	100 mm	2345889
			Standard	1200 mm			8 mm	1	100 mm	2345888
			FCS	1200 mm			6 mm	2	30 mm	179345
		Milling drum	FCS	1000 mm			15 mm	1	290 mm	2338521
			FCS	900 mm			15 mm	1	290 mm	2338522
			FCS	750 mm			15 mm	1	290 mm	2338523
			FCS	600 mm			12 mm	1	290 mm	2338525
			FCS	500 mm			15 mm	1	290 mm	2338527
			Standard	1200 mm			15 mm	1	315 mm	2345887
			FCS	300 mm			12 mm	1	290 mm	2338528
			FCS	1200 mm			15 mm	1	315 mm	2338520
W 120 F	0810	Fine milling drum	FCS	1200 mm			8 mm	1	100 mm	2308217
			FCS	1200 mm			6 mm	2	30 mm	2062051
		Milling drum	FCS	500 mm			15 mm	1	290 mm	2308183
			Standard	1200 mm			15 mm	1	320 mm	2308580
			FCS	900 mm			15 mm	1	290 mm	2308214
			FCS	1200 mm			25 mm	1	320 mm	2308291
			FCS	1200 mm			18 mm	1	320 mm	2308569
			FCS	600 mm			12 mm	1	290 mm	2308151
			FCS	1200 mm			15 mm	1	320 mm	2308146
			FCS	300 mm			12 mm	1	290 mm	2308192
W 120 Fi	1310	Fine milling drum	FCS	1200 mm			8 mm	1	100 mm	2308217
			FCS	1200 mm			6 mm	2	30 mm	2062051
		Milling drum	FCS	500 mm			15 mm	1	290 mm	2308183
			Standard	1200 mm			15 mm	1	320 mm	2308580

MILLING DRUM

Series code	Serial code	Part	Milling drum variant	Milling width	Milling width without outlet	Milling width outlet	Line spacing	Number of tool operations per revolution	Maximum milling depth	Part no.
W 120 Fi	1310	Milling drum	FCS	900 mm			15 mm	1	290 mm	2308214
			FCS	1200 mm			25 mm	1	320 mm	2308291
			FCS	1200 mm			18 mm	1	320 mm	2308569
			FCS	600 mm			12 mm	1	290 mm	2308151
			FCS	1200 mm			15 mm	1	320 mm	2308146
			FCS	300 mm			12 mm	1	290 mm	2308192
W 120 CF	1710	Fine milling drum	FCS	1200 mm			8 mm	1	100 mm	2308217
			FCS	1200 mm			6 mm	2	30 mm	2062051
		Milling drum	FCS	500 mm			15 mm	1	290 mm	2308183
			Standard	1200 mm			15 mm	1	320 mm	2308580
			FCS	900 mm			15 mm	1	290 mm	2308214
			FCS	1200 mm			25 mm	1	320 mm	2308291
			FCS	1200 mm			18 mm	1	320 mm	2308569
			FCS	600 mm			12 mm	1	290 mm	2308151
			FCS	1200 mm			15 mm	1	320 mm	2308146
			FCS	300 mm			12 mm	1	290 mm	2308192
W 120 CFi	1810	Fine milling drum	FCS	1200 mm			8 mm	1	100 mm	2308217
			FCS	1200 mm			6 mm	2	30 mm	2062051
		Milling drum	FCS	500 mm			15 mm	1	290 mm	2308183
			Standard	1200 mm			15 mm	1	320 mm	2308580
			FCS	900 mm			15 mm	1	290 mm	2308214
			FCS	1200 mm			25 mm	1	320 mm	2308291
			FCS	1200 mm			18 mm	1	320 mm	2308569
			FCS	600 mm			12 mm	1	290 mm	2308151
			FCS	1200 mm			15 mm	1	320 mm	2308146

Original WIRTGEN

MILLING DRUM

MILLING DRUM										
Series code	Serial code	Part	Milling drum variant	Milling width	Milling width without outlet	Milling width outlet	Line spacing	Number of tool operations per revolution	Maximum milling depth	Part no.
W 120 CFi	1810	Milling drum	FCS	300 mm			12 mm	1	290 mm	2308192
W 1300 F	0710	Fine milling drum	FCS	1320 mm			8 mm	1	100 mm	2345892
		Milling drum	FCS	1000 mm			15 mm	1	290 mm	2338521
			FCS	900 mm			15 mm	1	290 mm	2338522
			FCS	750 mm			15 mm	1	290 mm	2338523
			FCS	500 mm			15 mm	1	290 mm	2338527
			FCS	300 mm			12 mm	1	290 mm	2338528
			Standard	1320 mm			15 mm	1	315 mm	2345890
			FCS	1320 mm			15 mm	1	315 mm	2345891
			FCS	1200 mm			15 mm	1	290 mm	2338520
			FCS	600 mm			12 mm	1	290 mm	2338525
W 130 F	0810	Fine milling drum	FCS	1300 mm			8 mm	1	100 mm	2308268
			FCS	1300 mm			6 mm	2	30 mm	2062070
		Milling drum	FCS	300 mm			12 mm	1	290 mm	2308192
			FCS	1300 mm			25 mm	1	320 mm	2308610
			FCS	1300 mm			15 mm	1	320 mm	2308220
			FCS	1300 mm			18 mm	1	320 mm	2308457
			Standard	1300 mm			15 mm	1	320 mm	2308584
			FCS	500 mm			15 mm	1	290 mm	2308183
			FCS	600 mm			12 mm	1	290 mm	2308151
			FCS	900 mm			15 mm	1	290 mm	2308214
W 130 Fi	1310	Fine milling drum	FCS	1300 mm			8 mm	1	100 mm	2308268
			FCS	1300 mm			6 mm	2	30 mm	2062070
		Milling drum	FCS	300 mm			12 mm	1	290 mm	2308192

MILLING DRUM

Series code	Serial code	Part	Milling drum variant	Milling width	Milling width without outlet	Milling width outlet	Line spacing	Number of tool operations per revolution	Maximum milling depth	Part no.
W 130 Fi	1310	Milling drum	FCS	1300 mm			25 mm	1	320 mm	2308610
			FCS	1300 mm			15 mm	1	320 mm	2308220
			FCS	1300 mm			18 mm	1	320 mm	2308457
			Standard	1300 mm			15 mm	1	320 mm	2308584
			FCS	500 mm			15 mm	1	290 mm	2308183
			FCS	600 mm			12 mm	1	290 mm	2308151
			FCS	900 mm			15 mm	1	290 mm	2308214
W 130 CF	1710	Fine milling drum	FCS	1300 mm			8 mm	1	100 mm	2308268
			FCS	1300 mm			6 mm	2	30 mm	2062070
		Milling drum	FCS	300 mm			12 mm	1	290 mm	2308192
			FCS	1300 mm			25 mm	1	320 mm	2308610
			FCS	1300 mm			15 mm	1	320 mm	2308220
			FCS	1300 mm			18 mm	1	320 mm	2308457
			Standard	1300 mm			15 mm	1	320 mm	2308584
			FCS	500 mm			15 mm	1	290 mm	2308183
			FCS	600 mm			12 mm	1	290 mm	2308151
			FCS	900 mm			15 mm	1	290 mm	2308214
W 130 CFi	1810	Fine milling drum	FCS	1300 mm			8 mm	1	100 mm	2308268
			FCS	1300 mm			6 mm	2	30 mm	2062070
		Milling drum	FCS	300 mm			12 mm	1	290 mm	2308192
			FCS	1300 mm			25 mm	1	320 mm	2308610
			FCS	1300 mm			15 mm	1	320 mm	2308220
			FCS	1300 mm			18 mm	1	320 mm	2308457
			Standard	1300 mm			15 mm	1	320 mm	2308584
			FCS	500 mm			15 mm	1	290 mm	2308183

Original WIRTGEN

MILLING DRUM

MILLING DRUM										
Series code	Serial code	Part	Milling drum variant	Milling width	Milling width without outlet	Milling width outlet	Line spacing	Number of tool operations per revolution	Maximum milling depth	Part no.
W 130 CFi	1810	Milling drum	FCS	600 mm			12 mm	1	290 mm	2308151
			FCS	900 mm			15 mm	1	290 mm	2308214
W 1500	0820	Fine milling drum	Standard	1320 mm			8 mm	1	100 mm	2338530
		Milling drum	Standard	1500 mm			15 mm	1	300 mm	2338533
			Standard	1320 mm			15 mm	1	300 mm	2338532
W 150	0513	Fine milling drum	FCS	1200 mm			6 mm	2	30 mm	2062051
			FCS	1500 mm			8 mm	1	100 mm	2314989
			FCS	1200 mm			8 mm	1	100 mm	2308217
			FCS	1500 mm			6 mm	2	30 mm	2090831
		Milling drum	Standard	1500 mm			15 mm	1	320 mm	2309338
			FCS	1500 mm			18 mm	1	320 mm	2315000
			FCS	1200 mm			15 mm	1	320 mm	2308146
			FCS	600 mm			12 mm	1	280 mm	2308151
			FCS	900 mm			15 mm	1	280 mm	2308214
			Standard	1200 mm			15 mm	1	320 mm	2309334
			FCS	1500 mm			15 mm	1	320 mm	2309322
			FCS	1200 mm			18 mm	1	320 mm	2308569
			FCS	1200 mm			25 mm	1	320 mm	2308291
			FCS	1500 mm			25 mm	1	320 mm	2314996
W 150i	0613	Fine milling drum	FCS	1200 mm			8 mm	1	100 mm	2308217
			FCS	1500 mm			8 mm	1	100 mm	2314989
			FCS	1200 mm			6 mm	2	30 mm	2062051
			FCS	1500 mm			6 mm	2	30 mm	2090831
		Milling drum	FCS	1200 mm			18 mm	1	320 mm	2308569

MILLING DRUM

Series code	Serial code	Part	Milling drum variant	Milling width	Milling width without outlet	Milling width outlet	Line spacing	Number of tool operations per revolution	Maximum milling depth	Part no.
W 150i	0613	Milling drum	FCS	1500 mm			15 mm	1	320 mm	2309322
			Standard	1200 mm			15 mm	1	320 mm	2309334
			Standard	1500 mm			15 mm	1	320 mm	2309338
			FCS	1500 mm			25 mm	1	320 mm	2314996
			FCS	1500 mm			18 mm	1	320 mm	2315000
			FCS	900 mm			15 mm	1	280 mm	2308214
			FCS	600 mm			12 mm	1	280 mm	2308151
			FCS	1200 mm			15 mm	1	320 mm	2308146
			FCS	1200 mm			25 mm	1	320 mm	2308291
W 150 CF	0713	Fine milling drum	FCS	1200 mm			6 mm	2	30 mm	2062051
			FCS	1800 mm			6 mm	2	30 mm	2632992
			FCS	1500 mm			6 mm	2	30 mm	2090831
			FCS	1500 mm			8 mm	1	100 mm	2314989
			FCS	1200 mm			8 mm	1	100 mm	2308217
		Milling drum	Standard	1500 mm			15 mm	1	330 mm	2309338
			FCS	1500 mm			25 mm	1	330 mm	2314996
			FCS	1500 mm			18 mm	1	330 mm	2315000
			FCS	1800 mm			18 mm	1	330 mm	2535359
			FCS	1500 mm			15 mm	1	330 mm	2309322
			FCS	1200 mm			25 mm	1	280 mm	2308291
			FCS	900 mm			15 mm	1	280 mm	2308214
			FCS	600 mm			12 mm	1	280 mm	2308151
			FCS	1200 mm			15 mm	1	280 mm	2308146
			FCS	1200 mm			18 mm	1	280 mm	2308569

Original WIRTGEN

MILLING DRUM

MILLING DRUM										
Series code	Serial code	Part	Milling drum variant	Milling width	Milling width without outlet	Milling width outlet	Line spacing	Number of tool operations per revolution	Maximum milling depth	Part no.
W 150 CFi	0813	Fine milling drum	FCS	1200 mm			6 mm	2	30 mm	2062051
			FCS	1800 mm			6 mm	2	30 mm	2632992
			FCS	1500 mm			6 mm	2	30 mm	2090831
			FCS	1500 mm			8 mm	1	100 mm	2314989
			FCS	1200 mm			8 mm	1	100 mm	2308217
		Milling drum	Standard	1500 mm			15 mm	1	330 mm	2309338
			FCS	1500 mm			25 mm	1	330 mm	2314996
			FCS	1500 mm			18 mm	1	330 mm	2315000
			FCS	1800 mm			18 mm	1	330 mm	2535359
			FCS	1500 mm			15 mm	1	330 mm	2309322
			FCS	1200 mm			25 mm	1	280 mm	2308291
			FCS	900 mm			15 mm	1	280 mm	2308214
			FCS	600 mm			12 mm	1	280 mm	2308151
			FCS	1200 mm			15 mm	1	280 mm	2308146
			FCS	1200 mm			18 mm	1	280 mm	2308569
W 1900	0820	Fine milling drum	FCS	2000 mm			8 mm	1	100 mm	2314592
			FCS	2000 mm			6 mm	2	30 mm	144986
			Standard	2000 mm			8 mm	1	100 mm	2338534
			Standard	2000 mm			6 mm	2	30 mm	123977
		Milling drum	FCS	2000 mm			15 mm	1	320 mm	2314585
			Standard	2000 mm			15 mm	1	320 mm	2314564
	0920	Fine milling drum	Standard	2000 mm			8 mm	1	100 mm	2338534
			FCS	2000 mm			6 mm	2	30 mm	144986
			FCS	2000 mm			8 mm	1	100 mm	2314592
			Standard	2000 mm			6 mm	2	30 mm	123977

MILLING DRUM

Series code	Serial code	Part	Milling drum variant	Milling width	Milling width without outlet	Milling width outlet	Line spacing	Number of tool operations per revolution	Maximum milling depth	Part no.
W 1900	0920	Milling drum	Standard	2000 mm			15 mm	1	320 mm	2314564
			FCS	2000 mm			15 mm	1	320 mm	2314585
	1020	Fine milling drum	FCS	2000 mm			8 mm	1	100 mm	2314592
			FCS	2000 mm			6 mm	2	30 mm	144986
			Standard	2000 mm			8 mm	1	100 mm	2338534
			Standard	2000 mm			6 mm	2	30 mm	123977
		Milling drum	FCS	2000 mm			15 mm	1	320 mm	2314585
			Standard	2000 mm			15 mm	1	320 mm	2314564
W 195	1820	Fine milling drum	FCS	2000 mm			8 mm	1	100 mm	2307327
			FCS	2000 mm			6 mm	2	30 mm	2112481
			Standard	2000 mm			6 mm	2	30 mm	2112478
			Standard	2000 mm			8 mm	1	100 mm	2307323
		Milling drum	FCS	2000 mm			15 mm	1	330 mm	2307326
			FCS	2000 mm			18 mm	1	330 mm	2307325
			FCS	2000 mm			25 mm	1	330 mm	2307324
			Standard	2000 mm			18 mm	1	330 mm	2307321
			Standard	2000 mm			25 mm	1	330 mm	2307320
			Standard	2000 mm			15 mm	1	330 mm	2307322
W 2000	0620, 1120	Fine milling drum	FCS	2000 mm			6 mm	2	30 mm	144986
			Standard	2200 mm			8 mm	1	100 mm	2338535
			Standard	2000 mm			8 mm	1	100 mm	2338534
			FCS	2000 mm			8 mm	1	100 mm	2314592
			Standard	2000 mm			6 mm	2	30 mm	123977
		Milling drum	Standard	2000 mm			25 mm	1	320 mm	2338536
			FCS	2000 mm			25 mm	1	320 mm	2338538

Original WIRTGEN

MILLING DRUM

MILLING DRUM										
Series code	Serial code	Part	Milling drum variant	Milling width	Milling width without outlet	Milling width outlet	Line spacing	Number of tool opera-tions per re-volution	Max-imum milling depth	Part no.
W 2000	0620, 1120	Milling drum	Standard	2200 mm			15 mm	1	320 mm	2314577
			Standard	2000 mm			15 mm	1	320 mm	2314564
			FCS	2000 mm			15 mm	1	320 mm	2314585
W 200	1220	Fine milling drum	FCS	2200 mm			6 mm	2	30 mm	2119190
			FCS	2200 mm			8 mm	1	100 mm	2307335
			FCS	2000 mm			6 mm	2	30 mm	2112481
			Standard	2000 mm			6 mm	2	30 mm	2112478
			Standard	2000 mm			8 mm	1	100 mm	2307323
			FCS	2000 mm			8 mm	1	100 mm	2307327
		Milling drum	Standard	2200 mm			15 mm	1	330 mm	2307330
			FCS	2200 mm			25 mm	1	330 mm	2307332
			FCS	2200 mm			18 mm	1	330 mm	2307333
			Standard	1500 mm			15 mm	1	310 mm	2307338
			FCS	2000 mm			15 mm	1	330 mm	2307326
			FCS	2200 mm			15 mm	1	330 mm	2370389
			FCS	2000 mm			25 mm	1	330 mm	2307324
			Standard	2000 mm			15 mm	1	330 mm	2307322
			Standard	2000 mm			18 mm	1	330 mm	2307321
			Standard	2000 mm			25 mm	1	330 mm	2307320
			FCS	2000 mm			18 mm	1	330 mm	2307325
W 200i	1420	Fine milling drum	Standard	2000 mm			6 mm	2	30 mm	2112478
			Standard	2000 mm			8 mm	1	100 mm	2307323
			FCS	2000 mm			8 mm	1	100 mm	2307327
			FCS	2200 mm			6 mm	2	30 mm	2119190
			FCS	2200 mm			8 mm	1	100 mm	2307335

MILLING DRUM

Series code	Serial code	Part	Milling drum variant	Milling width	Milling width without outlet	Milling width outlet	Line spacing	Number of tool operations per revolution	Maximum milling depth	Part no.
W 200i	1420	Fine milling drum	FCS	2000 mm			6 mm	2	30 mm	2112481
		Milling drum	Standard	2200 mm			15 mm	1	330 mm	2307330
			FCS	2200 mm			25 mm	1	330 mm	2307332
			FCS	2200 mm			18 mm	1	330 mm	2307333
			Standard	1500 mm			15 mm	1	310 mm	2307338
			FCS	1200 mm			15 mm	1	310 mm	2307340
			FCS	900 mm			15 mm	1	310 mm	2307341
			FCS	600 mm			15 mm	1	310 mm	2307342
			FCS	2200 mm			15 mm	1	330 mm	2370389
			FCS	2000 mm			18 mm	1	330 mm	2307325
			FCS	2000 mm			25 mm	1	330 mm	2307324
			Standard	2000 mm			15 mm	1	330 mm	2307322
			Standard	2000 mm			18 mm	1	330 mm	2307321
			Standard	2000 mm			25 mm	1	330 mm	2307320
			FCS	2000 mm			15 mm	1	330 mm	2307326
W 200 F	2020	Fine milling drum	Standard	2000 mm			6 mm	2	30 mm	2112478
			MCS-B	2200 mm			6 mm	2	30 mm	2687542
			Standard	2200 mm			6 mm	2	30 mm	2112500
			MCS-B	2000 mm			6 mm	2	30 mm	2687539
			MCS-B	2200 mm			8 mm	1	100 mm	2627263
			MCS-B	2000 mm			8 mm	1	100 mm	2626331
			Standard	2200 mm			8 mm	1	100 mm	2307331
			Standard	2000 mm			8 mm	1	100 mm	2307323
		Milling drum	Standard	2000 mm			18 mm	1	330 mm	2307321

Original WIRTGEN

MILLING DRUM

MILLING DRUM										
Series code	Serial code	Part	Milling drum variant	Milling width	Milling width without outlet	Milling width outlet	Line spacing	Number of tool operations per revolution	Maximum milling depth	Part no.
W 200 F	2020	Milling drum	MCS-B	2200 mm			15 mm	1	330 mm	2659150
			MCS-B	2000 mm			15 mm	1	330 mm	2616746
			MCS-B	2000 mm			18 mm	1	330 mm	2616748
			MCS-B	2200 mm			18 mm	1	330 mm	2623439
			Standard	2000 mm			15 mm	1	330 mm	2307322
			Standard	2000 mm			25 mm	1	330 mm	2307320
			MCS-B	2000 mm			25 mm	1	330 mm	2630948
			Standard	2200 mm			18 mm	1	330 mm	2307329
			Standard	2200 mm			25 mm	1	330 mm	2307328
			MCS-B	2200 mm			25 mm	1	330 mm	2636948
			Standard	2200 mm			15 mm	1	330 mm	2307330
		PCD milling drum	MCS-B	2000 mm			15 mm	1	330 mm	2675764
			MCS-B	2200 mm			15 mm	1	330 mm	2675768
W 200 Fi	2120	Fine milling drum	Standard	2000 mm			8 mm	1	100 mm	2307323
			Standard	2200 mm			8 mm	1	100 mm	2307331
			Standard	1500 mm			8 mm	1	100 mm	2307339
			MCS-B	2000 mm			8 mm	1	100 mm	2626331
			MCS-B	2200 mm			6 mm	2	30 mm	2687542
			Standard	2000 mm			6 mm	2	30 mm	2112478
			Standard	2200 mm			6 mm	2	30 mm	2112500
			Standard	1500 mm			6 mm	2	30 mm	2139106
			MCS-B	2000 mm			6 mm	2	30 mm	2687539
			MCS-B	2200 mm			8 mm	1	100 mm	2627263
		Milling drum	Standard	2200 mm			25 mm	1	330 mm	2307328
			Standard	2200 mm			18 mm	1	330 mm	2307329

MILLING DRUM

Series code	Serial code	Part	Milling drum variant	Milling width	Milling width without outlet	Milling width outlet	Line spacing	Number of tool operations per revolution	Maximum milling depth	Part no.
W 200 Fi	2120	Milling drum	Standard	2200 mm			15 mm	1	330 mm	2307330
			Standard	1500 mm			25 mm	1	330 mm	2307336
			Standard	1500 mm			15 mm	1	330 mm	2307338
			MCS-B	2000 mm			15 mm	1	330 mm	2616746
			MCS-B	2000 mm			18 mm	1	330 mm	2616748
			MCS-B	2200 mm			18 mm	1	330 mm	2623439
			MCS-B	2000 mm			25 mm	1	330 mm	2630948
			Standard	2000 mm			25 mm	1	330 mm	2307320
			Standard	2000 mm			18 mm	1	330 mm	2307321
			Standard	2000 mm			15 mm	1	330 mm	2307322
			MCS-B	2200 mm			25 mm	1	330 mm	2636948
			MCS-B	2200 mm			15 mm	1	330 mm	2659150
		PCD milling drum	MCS-B	2200 mm			15 mm	1	330 mm	2675768
			MCS-B	2000 mm			15 mm	1	330 mm	2675764
W 200 H	1620	Milling drum	Standard	2100 mm			18 mm	1	300 mm	2314417
			Standard	2100 mm			15 mm	1	300 mm	2314414
W 200 Hi	1720	Milling drum	Standard	2100 mm			18 mm	1	300 mm	2314417
			Standard	2100 mm			15 mm	1	300 mm	2314414
W 205	2520	Fine milling drum	FCS	2000 mm			8 mm	1	100 mm	2307327
			FCS	2000 mm			6 mm	2	30 mm	2112481
			Standard	2000 mm			6 mm	2	30 mm	2112478
			Standard	2000 mm			8 mm	1	100 mm	2307323
		Milling drum	FCS	2000 mm			15 mm	1	330 mm	2307326
			FCS	2000 mm			18 mm	1	330 mm	2307325
			FCS	2000 mm			25 mm	1	330 mm	2307324

Original WIRTGEN

MILLING DRUM

MILLING DRUM										
Series code	Serial code	Part	Milling drum variant	Milling width	Milling width without outlet	Milling width outlet	Line spacing	Number of tool operations per revolution	Maximum milling depth	Part no.
W 205	2520	Milling drum	Standard	2000 mm			18 mm	1	330 mm	2307321
			Standard	2000 mm			25 mm	1	330 mm	2307320
			Standard	2000 mm			15 mm	1	330 mm	2307322
W 207 Fi	2120	Fine milling drum	Standard	2000 mm			6 mm	2	30 mm	2112478
			MCS-B	2200 mm			6 mm	2	30 mm	2687542
			MCS-B	2000 mm			6 mm	2	30 mm	2687539
			Standard	2200 mm			6 mm	2	30 mm	2112500
			MCS-B	2000 mm			8 mm	1	100 mm	2626331
			Standard	1500 mm			8 mm	1	100 mm	2307339
			Standard	2200 mm			8 mm	1	100 mm	2307331
			Standard	2000 mm			8 mm	1	100 mm	2307323
			MCS-B	2200 mm			8 mm	1	100 mm	2627263
			Standard	1500 mm			6 mm	2	30 mm	2139106
		Milling drum	MCS-B	2000 mm			25 mm	1	330 mm	2630948
			MCS-B	2200 mm			25 mm	1	330 mm	2636948
			MCS-B	2200 mm			15 mm	1	330 mm	2659150
			MCS-B	2200 mm			18 mm	1	330 mm	2623439
			MCS-B	2000 mm			18 mm	1	330 mm	2616748
			MCS-B	2000 mm			15 mm	1	330 mm	2616746
			Standard	1500 mm			15 mm	1	330 mm	2307338
			Standard	1500 mm			25 mm	1	330 mm	2307336
			Standard	2200 mm			15 mm	1	330 mm	2307330
			Standard	2200 mm			18 mm	1	330 mm	2307329
			Standard	2200 mm			25 mm	1	330 mm	2307328
			Standard	2000 mm			25 mm	1	330 mm	2307320

MILLING DRUM

Series code	Serial code	Part	Milling drum variant	Milling width	Milling width without outlet	Milling width outlet	Line spacing	Number of tool operations per revolution	Maximum milling depth	Part no.
W 207 Fi	2120	Milling drum	Standard	2000 mm			18 mm	1	330 mm	2307321
			Standard	2000 mm			15 mm	1	330 mm	2307322
		PCD milling drum	MCS-B	2000 mm			15 mm	1	330 mm	2675764
			MCS-B	2200 mm			15 mm	1	330 mm	2675768
W 2100	0921	Fine milling drum	Standard	2100 mm			8 mm	1	100 mm	2338541
			Standard	2000 mm			8 mm	1	100 mm	2338543
		Milling drum	Standard	2000 mm			15 mm	1	320 mm	2338542
			Standard	2100 mm			15 mm	1	320 mm	2338539
			Standard	2200 mm			15 mm	1	320 mm	2315691
W 210	1320	Fine milling drum	FCS	2200 mm			6 mm	2	30 mm	2119190
			FCS	2200 mm			8 mm	1	100 mm	2307335
			FCS	2000 mm			6 mm	2	30 mm	2112481
			Standard	2000 mm			6 mm	2	30 mm	2112478
			Standard	2000 mm			8 mm	1	100 mm	2307323
			FCS	2000 mm			8 mm	1	100 mm	2307327
		Milling drum	Standard	2200 mm			15 mm	1	330 mm	2307330
			FCS	2200 mm			25 mm	1	330 mm	2307332
			FCS	2200 mm			18 mm	1	330 mm	2307333
			Standard	1500 mm			15 mm	1	310 mm	2307338
			FCS	2000 mm			15 mm	1	330 mm	2307326
			FCS	2200 mm			15 mm	1	330 mm	2370389
			FCS	2000 mm			25 mm	1	330 mm	2307324
			Standard	2000 mm			15 mm	1	330 mm	2307322
			Standard	2000 mm			18 mm	1	330 mm	2307321
			Standard	2000 mm			25 mm	1	330 mm	2307320

Original WIRTGEN

MILLING DRUM

MILLING DRUM										
Series code	Serial code	Part	Milling drum variant	Milling width	Milling width without outlet	Milling width outlet	Line spacing	Number of tool operations per revolution	Maximum milling depth	Part no.
W 210	1320	Milling drum	FCS	2000 mm			18 mm	1	330 mm	2307325
W 210i	1520	Fine milling drum	Standard	2000 mm			6 mm	2	30 mm	2112478
			Standard	2000 mm			8 mm	1	100 mm	2307323
			FCS	2000 mm			8 mm	1	100 mm	2307327
			FCS	2200 mm			6 mm	2	30 mm	2119190
			FCS	2200 mm			8 mm	1	100 mm	2307335
			FCS	2000 mm			6 mm	2	30 mm	2112481
		Milling drum	Standard	2200 mm			15 mm	1	330 mm	2307330
			FCS	2200 mm			25 mm	1	330 mm	2307332
			FCS	2200 mm			18 mm	1	330 mm	2307333
			Standard	1500 mm			15 mm	1	310 mm	2307338
			FCS	1200 mm			15 mm	1	310 mm	2307340
			FCS	900 mm			15 mm	1	310 mm	2307341
			FCS	600 mm			15 mm	1	310 mm	2307342
			FCS	2200 mm			15 mm	1	330 mm	2370389
			FCS	2000 mm			18 mm	1	330 mm	2307325
			FCS	2000 mm			25 mm	1	330 mm	2307324
			Standard	2000 mm			15 mm	1	330 mm	2307322
			Standard	2000 mm			18 mm	1	330 mm	2307321
			Standard	2000 mm			25 mm	1	330 mm	2307320
			FCS	2000 mm			15 mm	1	330 mm	2307326
W 210 Fi	2320	Fine milling drum	Standard	2000 mm			6 mm	2	30 mm	2112478
			MCS-B	2200 mm			6 mm	2	30 mm	2687542
			Standard	2200 mm			6 mm	2	30 mm	2112500
			MCS-B	2000 mm			6 mm	2	30 mm	2687539

MILLING DRUM

Series code	Serial code	Part	Milling drum variant	Milling width	Milling width without outlet	Milling width outlet	Line spacing	Number of tool operations per revolution	Maximum milling depth	Part no.
W 210 Fi	2320	Fine milling drum	MCS-B	2500 mm			8 mm	1	100 mm	2627265
			MCS-B	2200 mm			8 mm	1	100 mm	2627263
			MCS-B	2000 mm			8 mm	1	100 mm	2626331
			Standard	2200 mm			8 mm	1	100 mm	2307331
			Standard	2000 mm			8 mm	1	100 mm	2307323
		Milling drum	MCS-B	2200 mm			15 mm	1	330 mm	2659150
			Standard	2000 mm			25 mm	1	330 mm	2307320
			MCS-B	2500 mm			25 mm	1	330 mm	2687543
			MCS-B	2000 mm			18 mm	1	330 mm	2616748
			MCS-B	2200 mm			18 mm	1	330 mm	2623439
			MCS-B	2500 mm			18 mm	1	330 mm	2624427
			MCS-B	2000 mm			15 mm	1	330 mm	2616746
			Standard	2000 mm			18 mm	1	330 mm	2307321
			Standard	2000 mm			15 mm	1	330 mm	2307322
			MCS-B	2000 mm			25 mm	1	330 mm	2630948
			Standard	2200 mm			15 mm	1	330 mm	2307330
			Standard	2200 mm			18 mm	1	330 mm	2307329
			Standard	2200 mm			25 mm	1	330 mm	2307328
			MCS-B	2200 mm			25 mm	1	330 mm	2636948
		PCD milling drum	MCS-B	2500 mm			18 mm	1	330 mm	2675788
			MCS-B	2200 mm			15 mm	1	330 mm	2675768
			MCS-B	2000 mm			15 mm	1	330 mm	2675764
W 210 XP	2420	Fine milling drum	Standard	2000 mm			8 mm	1	100 mm	2307323
			Standard	2000 mm			6 mm	2	30 mm	2112478
			FCS	2200 mm			8 mm	1	100 mm	2307335

Original WIRTGEN

MILLING DRUM

MILLING DRUM										
Series code	Serial code	Part	Milling drum variant	Milling width	Milling width without outlet	Milling width outlet	Line spacing	Number of tool operations per revolution	Maximum milling depth	Part no.
W 210 XP	2420	Fine milling drum	FCS	2000 mm			8 mm	1	100 mm	2307327
			FCS	2200 mm			6 mm	2	30 mm	2119190
			FCS	2000 mm			6 mm	2	30 mm	2112481
		Milling drum	FCS	2200 mm			15 mm	1	330 mm	2370389
			Standard	2000 mm			25 mm	1	330 mm	2307320
			Standard	2000 mm			18 mm	1	330 mm	2307321
			Standard	2000 mm			15 mm	1	330 mm	2307322
			Standard	1500 mm			15 mm	1	310 mm	2307338
			FCS	2200 mm			18 mm	1	330 mm	2307333
			FCS	2200 mm			25 mm	1	330 mm	2307332
			Standard	2200 mm			15 mm	1	330 mm	2307330
			FCS	2000 mm			25 mm	1	330 mm	2307324
			FCS	2000 mm			18 mm	1	330 mm	2307325
			FCS	2000 mm			15 mm	1	330 mm	2307326
W 215	1920	Fine milling drum	FCS	2000 mm			8 mm	1	100 mm	2307327
			FCS	2000 mm			6 mm	2	30 mm	2112481
			Standard	2000 mm			6 mm	2	30 mm	2112478
			Standard	2000 mm			8 mm	1	100 mm	2307323
		Milling drum	FCS	2000 mm			15 mm	1	330 mm	2307326
			FCS	2000 mm			18 mm	1	330 mm	2307325
			FCS	2000 mm			25 mm	1	330 mm	2307324
			Standard	2000 mm			18 mm	1	330 mm	2307321
			Standard	2000 mm			25 mm	1	330 mm	2307320
			Standard	2000 mm			15 mm	1	330 mm	2307322
W 2200	0821	Milling drum	Standard	2200 mm			15 mm	1	350 mm	2300231

MILLING DRUM

Series code	Serial code	Part	Milling drum variant	Milling width	Milling width without outlet	Milling width outlet	Line spacing	Number of tool operations per revolution	Maximum milling depth	Part no.
W 2200	0821	Milling drum	FCS	2200 mm			15 mm	1	350 mm	2317660
			FCS	2500 mm			15 mm	1	350 mm	2317661
			FCS	4400 mm			15 mm	1	350 mm	2317666
			FCS	3500 mm			15 mm	1	350 mm	2317664
			FCS	3800 mm			15 mm	1	350 mm	2317665
			FCS	3100 mm			15 mm	1	350 mm	2317663
W 220	0522	Fine milling drum	FCS	2200 mm			6 mm	2	30 mm	2120236
		Milling drum	FCS	2200 mm			15 mm	1	350 mm	2317660
			FCS	2500 mm			15 mm	1	350 mm	2317661
			FCS	2500 mm			15 mm	1	350 mm	2440591
			Standard	2200 mm			15 mm	1	350 mm	2300231
			FCS	2200 mm			25 mm	1	350 mm	2309341
			FCS	2200 mm			15 mm	1	350 mm	2309353
			FCS	2200 mm			8 mm	1	100 mm	2309358
			FCS	2200 mm			18 mm	1	350 mm	2309362
W 220i	0722	Fine milling drum	FCS	2200 mm			6 mm	2	30 mm	2120236
		Milling drum	FCS	2200 mm			15 mm	1	350 mm	2309353
			FCS	2200 mm			8 mm	1	100 mm	2309358
			FCS	2200 mm			18 mm	1	350 mm	2309362
			Standard	2200 mm			15 mm	1	350 mm	2300231
			FCS	2500 mm			15 mm	1	350 mm	2317661
			FCS	2500 mm			15 mm	1	350 mm	2440591
			FCS	2200 mm			25 mm	1	350 mm	2309341

Original WIRTGEN

MILLING DRUM

MILLING DRUM										
Series code	Serial code	Part	Milling drum variant	Milling width	Milling width without outlet	Milling width outlet	Line spacing	Number of tool operations per revolution	Maximum milling depth	Part no.
W 220i	0722	Milling drum	FCS	2200 mm			15 mm	1	350 mm	2317660
W 220 Fi	1122	Fine milling drum	FCS	2200 mm			6 mm	2	30 mm	2120236
		Milling drum	FCS	2200 mm			25 mm	1	350 mm	2309341
			FCS	2200 mm			15 mm	1	350 mm	2309353
			FCS	2500 mm			15 mm	1	350 mm	2440591
			FCS	2200 mm			18 mm	1	350 mm	2309362
			FCS	2200 mm			15 mm	1	350 mm	2317660
			FCS	2500 mm			15 mm	1	350 mm	2317661
			Standard	2200 mm			15 mm	1	350 mm	2300231
			FCS	2200 mm			8 mm	1	100 mm	2309358
W 250	0422	Fine milling drum	FCS	2200 mm			6 mm	2	30 mm	2120236
		Milling drum	FCS	3800 mm			15 mm	1	350 mm	2317665
			FCS	4400 mm			15 mm	1	350 mm	2317666
			Standard	2200 mm			15 mm	1	350 mm	2300231
			FCS	3100 mm			15 mm	1	350 mm	2317663
			FCS	2200 mm			15 mm	1	350 mm	2309353
			FCS	2200 mm			8 mm	1	100 mm	2309358
			FCS	2200 mm			18 mm	1	350 mm	2309362
			FCS	2200 mm			15 mm	1	350 mm	2317660
			FCS	2500 mm			15 mm	1	350 mm	2317661
			FCS	3500 mm			15 mm	1	350 mm	2317664
			FCS	2200 mm			25 mm	1	350 mm	2309341

MILLING DRUM

Series code	Serial code	Part	Milling drum variant	Milling width	Milling width without outlet	Milling width outlet	Line spacing	Number of tool operations per revolution	Maximum milling depth	Part no.
W 250i	0622	Fine milling drum	FCS	2200 mm			6 mm	2	30 mm	2120236
		Milling drum	FCS	2200 mm			25 mm	1	350 mm	2309341
			FCS	2200 mm			15 mm	1	350 mm	2309353
			FCS	2200 mm			8 mm	1	100 mm	2309358
			FCS	4400 mm			15 mm	1	350 mm	2317666
			FCS	2200 mm			15 mm	1	350 mm	2317660
			FCS	2500 mm			15 mm	1	350 mm	2317661
			FCS	3100 mm			15 mm	1	350 mm	2317663
			FCS	3500 mm			15 mm	1	350 mm	2317664
			FCS	3800 mm			15 mm	1	350 mm	2317665
			Standard	2200 mm			15 mm	1	350 mm	2300231
			FCS	2200 mm			18 mm	1	350 mm	2309362
W 250 Fi	1322	Fine milling drum	FCS	2200 mm			6 mm	2	30 mm	2120236
		Milling drum	Standard	2200 mm			15 mm	1	350 mm	2300231
			FCS	2200 mm			25 mm	1	350 mm	2309341
			FCS	2200 mm			15 mm	1	350 mm	2309353
			FCS	3800 mm			15 mm	1	350 mm	2317665
			FCS	2200 mm			18 mm	1	350 mm	2309362
			FCS	2200 mm			15 mm	1	350 mm	2317660
			FCS	2500 mm			15 mm	1	350 mm	2317661
			FCS	3100 mm			15 mm	1	350 mm	2317663
			FCS	3500 mm			15 mm	1	350 mm	2317664
			FCS	4400 mm			15 mm	1	350 mm	2317666

Original WIRTGEN

MILLING DRUM

MILLING DRUM										
Series code	Serial code	Part	Milling drum variant	Milling width	Milling width without outlet	Milling width outlet	Line spacing	Number of tool operations per revolution	Maximum milling depth	Part no.
W 250 Fi	1322	Milling drum	FCS	2200 mm			8 mm	1	100 mm	2309358
WS 220	02AS	Milling drum	Standard	2150 mm			40 mm	1	500 mm	2314423
WS 250	02AS	Milling drum	Standard	2500 mm			40 mm	1	500 mm	2314429
WR 2000	03WR	DURAFORCE milling/mixing rotor	Standard	2000 mm			20 mm	1	500 mm	2338550
WR 200	06WR	DURA***F-ORCE*** milling/mixing rotor	Standard	2000 mm			20 mm	1	510 mm	2339558
			Standard	2000 mm			20 mm	1	510 mm	2339557
WR 200i	09WR	DURA***F-ORCE*** milling/mixing rotor	Standard	2000 mm			20 mm	1	510 mm	2339558
			Standard	2000 mm			20 mm	1	510 mm	2339557
WR 2400	05WR	DURA***F-ORCE*** milling/mixing rotor	Standard	2400 mm			20 mm	1	500 mm	2338552
WR 240	07WR	DURA***F-ORCE*** milling/mixing rotor	Standard	2400 mm			20 mm	1	510 mm	2314437
			Standard	2400 mm			20 mm	1	510 mm	2314434
WR 240i	10WR	DURA***F-ORCE*** milling/mixing rotor	Standard	2400 mm			20 mm	1	510 mm	2314437
			Standard	2400 mm			20 mm	1	510 mm	2314434
WR 2500 S	04WR	DURA***F-ORCE*** milling/mixing rotor	Standard	2438 mm			30 mm	2	500 mm	2341964
			Standard	3048 mm			37 mm	2	500 mm	2338553

MILLING DRUM

Series code	Serial code	Part	Milling drum variant	Milling width	Milling width without outlet	Milling width outlet	Line spacing	Number of tool operations per revolution	Maximum milling depth	Part no.
WR 250	08WR	DURA***F-ORCE*** milling/mixing rotor	Standard	2400 mm			30 mm	2	560 mm	2314518
			Standard	2400 mm			30 mm	2	560 mm	2314513
WR 250i	11WR	DURA***F-ORCE*** milling/mixing rotor	Standard	2400 mm			30 mm	2	560 mm	2314513
			Standard	2400 mm			30 mm	2	560 mm	2314518
W 240 CR	03CR	DC milling drum		3500 mm			15 mm	1	330 mm	2701518
				3800 mm			15 mm	1	330 mm	2701525
				3200 mm			15 mm	1	330 mm	2701514
		UC/DC milling drum	Standard	3800 mm			15 mm	1	330 mm	2315042
			Standard	2350 mm			15 mm	1	330 mm	2573810
W 240 CRi	04CR	DC milling drum		3200 mm			15 mm	1	330 mm	2701514
				3800 mm			15 mm	1	330 mm	2701525
				3500 mm			15 mm	1	330 mm	2701518
		UC/DC milling drum	Standard	3800 mm			15 mm	1	330 mm	2315042
			Standard	2350 mm			15 mm	1	330 mm	2573810
W 380 CR	03CR	DC milling drum		3800 mm			15 mm	1	330 mm	2701525
				3200 mm			15 mm	1	330 mm	2701514
				3500 mm			15 mm	1	330 mm	2701518
		UC/DC milling drum	Standard	2350 mm			15 mm	1	330 mm	2573810
			Standard	3800 mm			15 mm	1	330 mm	2315042
W 380 CRi	04CR	DC milling drum		3800 mm			15 mm	1	330 mm	2701525
				3500 mm			15 mm	1	330 mm	2701518
				3200 mm			15 mm	1	330 mm	2701514

Original WIRTGEN

MILLING DRUM

MILLING DRUM										
Series code	Serial code	Part	Milling drum variant	Milling width	Milling width without outlet	Milling width outlet	Line spacing	Number of tool operations per revolution	Maximum milling depth	Part no.
W 380 CRi	04CR	UC/DC milling drum	Standard	2350 mm			15 mm	1	330 mm	2573810
			Standard	3800 mm			15 mm	1	330 mm	2315042
2200 SM	0821	Milling drum	Standard	2200 mm			76 mm	1	300 mm	141663
			Standard	2200 mm			38 mm	1	300 mm	127333
			Standard	2200 mm			38 mm	1	300 mm	2143830
			Standard	2200 mm			76 mm	1	300 mm	2143829
			Standard	3800 mm			50 mm	1	300 mm	2045386
220 SM	0822	Milling drum	Standard	2200 mm			75 mm	1	350 mm	2570768
			Standard	2200 mm			50 mm	1	350 mm	2535495
			Standard	3800 mm			50 mm	1	350 mm	2535491
			Standard	3800 mm			75 mm	1	350 mm	2569952
220 SM 3.8	0822	Milling drum	Standard	2200 mm			75 mm	1	350 mm	2570768
			Standard	3800 mm			50 mm	1	350 mm	2535491
			Standard	2200 mm			50 mm	1	350 mm	2535495
			Standard	3800 mm			75 mm	1	350 mm	2569952
220 SMi	0922	Milling drum	Standard	2200 mm			75 mm	1	350 mm	2570768
			Standard	3800 mm			50 mm	1	350 mm	2535491
			Standard	2200 mm			50 mm	1	350 mm	2535495
			Standard	3800 mm			75 mm	1	350 mm	2569952
220 SMi 3.8	0922	Milling drum	Standard	3800 mm			50 mm	1	350 mm	2535491
			Standard	2200 mm			50 mm	1	350 mm	2535495
			Standard	3800 mm			75 mm	1	350 mm	2569952
			Standard	2200 mm			75 mm	1	350 mm	2570768
W 220 F	1022	Fine milling drum	FCS	2200 mm			6 mm	2	30 mm	2120236

MILLING DRUM

Series code	Serial code	Part	Milling drum variant	Milling width	Milling width without outlet	Milling width outlet	Line spacing	Number of tool operations per revolution	Maximum milling depth	Part no.
W 220 F	1022	Milling drum	Standard	2200 mm			15 mm	1	350 mm	2300231
			FCS	2200 mm			25 mm	1	350 mm	2309341
			FCS	2200 mm			15 mm	1	350 mm	2309353
			FCS	2200 mm			8 mm	1	100 mm	2309358
			FCS	2200 mm			18 mm	1	350 mm	2309362
			FCS	2200 mm			15 mm	1	350 mm	2317660
			FCS	2500 mm			15 mm	1	350 mm	2317661
			FCS	2500 mm			15 mm	1	350 mm	2440591
W 250 XF	1522	Fine milling drum	FCS	2200 mm			6 mm	2	30 mm	2120236
		Milling drum	FCS	3800 mm			15 mm	1	350 mm	2317665
			FCS	4400 mm			15 mm	1	350 mm	2317666
			FCS	3500 mm			15 mm	1	350 mm	2317664
			FCS	3100 mm			15 mm	1	350 mm	2317663
			FCS	2500 mm			15 mm	1	350 mm	2317661
			FCS	2200 mm			15 mm	1	350 mm	2317660
			FCS	2200 mm			18 mm	1	350 mm	2309362
			FCS	2200 mm			8 mm	1	100 mm	2309358
			FCS	2200 mm			15 mm	1	350 mm	2309353
			Standard	2200 mm			15 mm	1	350 mm	2300231
			FCS	2200 mm			25 mm	1	350 mm	2309341
W 220 XF	1422	Fine milling drum	FCS	2200 mm			6 mm	2	30 mm	2120236
		Milling drum	FCS	2500 mm			15 mm	1	350 mm	2317661
			FCS	2200 mm			15 mm	1	350 mm	2317660

Original WIRTGEN

MILLING DRUM

MILLING DRUM										
Series code	Serial code	Part	Milling drum variant	Milling width	Milling width without outlet	Milling width outlet	Line spacing	Number of tool operations per revolution	Maximum milling depth	Part no.
W 220 XF	1422	Milling drum	Standard	2200 mm			15 mm	1	350 mm	2300231
			FCS	2200 mm			8 mm	1	100 mm	2309358
			FCS	2200 mm			15 mm	1	350 mm	2309353
			FCS	2200 mm			25 mm	1	350 mm	2309341
			FCS	2500 mm			15 mm	1	350 mm	2440591
			FCS	2200 mm			18 mm	1	350 mm	2309362

UNDERCARRIAGE CRAWLER DRIVE

WIRTGEN crawler units are designed to safely the drive system power into forceful forward motion for the milling process, even in the tough conditions found day to day on the construction site.

The shape and dimensions of all the parts have been precisely tailored to the chain for reliable power transmission and high-precision tracking. The materials used guarantee a long service life and a high degree of functional reliability.

> Read more online

DRIVE SPROCKETS

Our precision-fit drive sprockets made of hardened, highly wear-resistant cast steel ensure that power is optimally transmitted to the WIRTGEN crawler undercarriages, which is converted into high-traction forward motion.

DRIVE SPROCKETS					
Series code	Serial code	Series range	Track pad system	Crawler size	Part no.
W 100 Fi	2710	1 - 9999	EPS ***PLUS***; Poly Grip; EPS ***PLUS*** bolt on	W1	2555933
W 1000 F	0710	8 - 9999	EPS ***PLUS***; Poly Grip; EPS ***PLUS*** bolt on	W1	2555933
W 100 F	0810	1 - 9999	EPS ***PLUS***; Poly Grip; EPS ***PLUS*** bolt on	W1	2555933

UNDERCARRIAGE CRAWLER DRIVE

DRIVE SPROCKETS					
Series code	Serial code	Series range	Track pad system	Crawler size	Part no.
W 100 Fi	1310	1 - 9999	EPS ***PLUS***; Poly Grip; EPS ***PLUS*** bolt on	W1	2555933
W 100 CF	1710	1 - 9999	EPS ***PLUS***; Poly Grip; EPS ***PLUS*** bolt on	W1	2555933
W 100 CFi	1810	1 - 9999	EPS ***PLUS***; Poly Grip; EPS ***PLUS*** bolt on	W1	2555933
W 100 XFi	1810	1 - 9999	EPS ***PLUS***; Poly Grip; EPS ***PLUS*** bolt on	W1	2555933
W 1200 F	0710	1 - 9999	EPS ***PLUS***; Poly Grip; EPS ***PLUS*** bolt on	W1	2555933
W 120 F	0810	1 - 9999	EPS ***PLUS***; Poly Grip; EPS ***PLUS*** bolt on	W1	2555933
W 120 Fi	1310	1 - 9999	EPS ***PLUS***; Poly Grip; EPS ***PLUS*** bolt on	W1	2555933
W 120 CF	1710	1 - 9999	EPS ***PLUS***; Poly Grip; EPS ***PLUS*** bolt on	W1	2555933
W 120 CFi	1810	1 - 9999	EPS ***PLUS***; Poly Grip; EPS ***PLUS*** bolt on	W1	2555933
W 120 XTi	1810	1 - 9999	EPS ***PLUS***; Poly Grip; EPS ***PLUS*** bolt on	W1	2555933
W 120 XFi	1810	1 - 9999	EPS ***PLUS***; Poly Grip; EPS ***PLUS*** bolt on	W1	2555933
W 120 Fi	2710	1 - 9999	EPS ***PLUS***; Poly Grip; EPS ***PLUS*** bolt on	W1	2555933
W 120 FTi	2710	1 - 9999	EPS ***PLUS***; Poly Grip; EPS ***PLUS*** bolt on	W1	2555933
W 1300 F	0710	1 - 9999	EPS ***PLUS***; Poly Grip; EPS ***PLUS*** bolt on	W1	2555933
W 130 F	0810	1 - 9999	EPS ***PLUS***; Poly Grip; EPS ***PLUS*** bolt on	W1	2555933
W 130 Fi	1310	1 - 9999	EPS ***PLUS***; Poly Grip; EPS ***PLUS*** bolt on	W1	2555933
W 130 CF	1710	1 - 9999	EPS ***PLUS***; Poly Grip; EPS ***PLUS*** bolt on	W1	2555933
W 130 CFi	1810	1 - 9999	EPS ***PLUS***; Poly Grip; EPS ***PLUS*** bolt on	W1	2555933
W 130 XFi	1810	1 - 9999	EPS ***PLUS***; Poly Grip; EPS ***PLUS*** bolt on	W1	2555933
W 130 Fi	2710	1 - 9999	EPS ***PLUS***; Poly Grip; EPS ***PLUS*** bolt on	W1	2555933
W 1500	0820	1 - 9999	EPS ***PLUS***; Poly Grip; EPS ***PLUS*** bolt on	W1	2555933
W 150	0513	1 - 9999	EPS ***PLUS***; Poly Grip; EPS ***PLUS*** bolt on	W1	2555933
W 150i	0613	1 - 9999	EPS ***PLUS***; Poly Grip; EPS ***PLUS*** bolt on	W1	2555933
W 150 CF	0713	1 - 9999	EPS ***PLUS***; Poly Grip; EPS ***PLUS*** bolt on	W1	2555933
W 150 CFi	0813	1 - 9999	EPS ***PLUS***; Poly Grip; EPS ***PLUS*** bolt on	W1	2555933
W 150 XFi	0813	1 - 9999	EPS ***PLUS***; Poly Grip; EPS ***PLUS*** bolt on	W1	2555933

DRIVE SPROCKETS

Series code	Serial code	Series range	Track pad system	Crawler size	Part no.
W 1900	0820, 0920, 1020	1 - 9999	EPS ***PLUS***; Poly Grip; EPS ***PLUS*** bolt on	W1	2555933
W 195	1820	1 - 9999	EPS ***PLUS***; Poly Grip; EPS ***PLUS*** bolt on	W1	2555933
W 2000	0620	1 - 9999	EPS ***PLUS***; Poly Grip; EPS ***PLUS*** bolt on	W2	121234
	1120	1 - 9999	EPS ***PLUS***; Poly Grip; EPS ***PLUS*** bolt on	W3	121234
W 200	1220	1 - 9999	EPS ***PLUS***; Poly Grip; EPS ***PLUS*** bolt on	W1	2555933
W 200i	1420	1 - 9999	EPS ***PLUS***; Poly Grip; EPS ***PLUS*** bolt on	W1	2555933
W 200 F	2020	1 - 9999	EPS ***PLUS***; Poly Grip; EPS ***PLUS*** bolt on	W1	2555933
W 200 Fi	2120	1 - 9999	EPS ***PLUS***; Poly Grip; EPS ***PLUS*** bolt on	W1	2555933
W 200 H	1620	1 - 9999	EPS ***PLUS***; Poly Grip; EPS ***PLUS*** bolt on	W1	2555933
W 200 Hi	1720	1 - 9999	EPS ***PLUS***; Poly Grip; EPS ***PLUS*** bolt on	W1	2555933
W 205	2520	88 - 9999	EPS ***PLUS***; Poly Grip; EPS ***PLUS*** bolt on	W2	121234
W 207 Fi	2120	1 - 9999	EPS ***PLUS***; Poly Grip; EPS ***PLUS*** bolt on	W3	121234
			EPS ***PLUS***; Poly Grip; EPS ***PLUS*** bolt on	W1	2555933
W 2100	0921	1 - 9999	EPS ***PLUS***; Poly Grip; EPS ***PLUS*** bolt on	W3	41346
W 210	1320	1 - 9999	EPS ***PLUS***; Poly Grip; EPS ***PLUS*** bolt on	W2	121234
W 210i	1520	1 - 9999	EPS ***PLUS***; Poly Grip; EPS ***PLUS*** bolt on	W2	121234
W 210 Fi	2320	1 - 9999	EPS ***PLUS***; Poly Grip; EPS ***PLUS*** bolt on	W2	121234
W 210 XP	2420	1 - 9999	EPS ***PLUS***; Poly Grip; EPS ***PLUS*** bolt on	W2	121234
W 215	1920	88 - 9999	EPS ***PLUS***; Poly Grip; EPS ***PLUS*** bolt on	W2	121234
W 2200	0821	1 - 9999	EPS ***PLUS***; Poly Grip; EPS ***PLUS*** bolt on	W5	133013
W 220	0522	1 - 9999	EPS ***PLUS***; Poly Grip; EPS ***PLUS*** bolt on	W4	41346
W 220i	0722	1 - 9999	EPS ***PLUS***; Poly Grip; EPS ***PLUS*** bolt on	W3	41346
W 220 Fi	1122	1 - 9999	EPS ***PLUS***; Poly Grip; EPS ***PLUS*** bolt on	W4	41346
W 250	0422	3 - 9999	EPS ***PLUS***; Poly Grip; EPS ***PLUS*** bolt on	W5	133013
W 250i	0622	1 - 9999	EPS ***PLUS***; Poly Grip; EPS ***PLUS*** bolt on	W5	133013
W 250 Fi	1322	1 - 9999	EPS ***PLUS***; Poly Grip; EPS ***PLUS*** bolt on	W5	133013

Original WIRTGEN

UNDERCARRIAGE CRAWLER DRIVE

DRIVE SPROCKETS					
Series code	Serial code	Series range	Track pad system	Crawler size	Part no.
2200 CR	0821	1 - 9999	EPS ***PLUS***; Poly Grip; EPS ***PLUS*** bolt on	W5	133013
W 240 CR	03CR	1 - 9999	EPS ***PLUS***; Poly Grip; EPS ***PLUS*** bolt on	W5	133013
W 240 CRi	04CR	1 - 9999	EPS ***PLUS***; Poly Grip; EPS ***PLUS*** bolt on	W5	133013
W 380 CR	03CR	1 - 9999	EPS ***PLUS***; Poly Grip; EPS ***PLUS*** bolt on	W5	133013
W 380 CRi	04CR	1 - 9999	EPS ***PLUS***; Poly Grip; EPS ***PLUS*** bolt on	W5	133013
SP 150	09SP	1 - 9999	EPS ***PLUS***; Poly Grip; EPS ***PLUS*** bolt on	W1	2555933
SP 15	12SP	1 - 9999	EPS ***PLUS***; Poly Grip; EPS ***PLUS*** bolt on	W1	2555933
SP 15i	14SP	1 - 9999	EPS ***PLUS***; Poly Grip; EPS ***PLUS*** bolt on	W1	2555933
SP 250	08SP	1 - 9999	EPS ***PLUS***; Poly Grip; EPS ***PLUS*** bolt on	W0	120586
SP 25	13SP	1 - 172	EPS ***PLUS***; Poly Grip; EPS ***PLUS*** bolt on	W0	120586
		173 - 9999	EPS ***PLUS***; Poly Grip; EPS ***PLUS*** bolt on	W1	2553365
SP 25i	15SP	1 - 1061	EPS ***PLUS***; Poly Grip; EPS ***PLUS*** bolt on	W0	120586
		1 - 9999	EPS ***PLUS***; Poly Grip; EPS ***PLUS*** bolt on	W1	2553365
SP 500	10SP	1 - 9999	EPS ***PLUS***; Poly Grip; EPS ***PLUS*** bolt on	W0	120586
2200 SM	0821	740 - 9999	EPS ***PLUS***; Poly Grip; EPS ***PLUS*** bolt on	W5	2416655

TRACK PADS

WIRTGEN offers different types of track pads so that you, as the customer, can select your preferred bolting type. Regardless of your choice, all WIRTGEN track pads provide reliable traction on a wide variety of surfaces and also prevent possible damage to the asphalt pavement. You can never go wrong with genuine track pads from WIRTGEN.

TRACK PADS							
Series code	Serial code	Part	Track pad system	Packaging unit	Crawler size	Track pads per crawler unit	Part no.
W 100 Fi	2710	Baseplate	EPS ***PLUS***; EPS ***PLUS*** bolt on	1 pc.	W1	20 pc.	2063489
		For track pads (incl. nuts)	EPS ***PLUS*** bolt on	1 pc.	W1	20 pc.	2615388
		Nut set for pads	EPS ***PLUS*** bolt on	100 pc.	W1	20 pc.	2908516
		Pad	EPS ***PLUS***	1 pc.	W1	20 pc.	2411111
		Pad bolt on	EPS ***PLUS*** bolt on	1 pc.	W1	20 pc.	2650002
		Set of bolts for pads.	EPS ***PLUS***	100 pc.	W1	20 pc.	2103002
		Bolt set for track pads (incl. nuts)	EPS ***PLUS***; EPS ***PLUS*** bolt on	100 pc.	W1	20 pc.	2064533
W 1000 F	0710	Baseplate	EPS ***PLUS***; EPS ***PLUS*** bolt on	1 pc.	W1	20 pc.	2063489
		Track pad	Poly Grip	1 pc.	W1	20 pc.	150740
		Nut	Poly Grip	1 pc.	W1	20 pc.	18502
		For track pads (incl. nuts)	EPS ***PLUS*** bolt on	1 pc.	W1	20 pc.	2615388
		Nut set for pads	EPS ***PLUS*** bolt on	100 pc.	W1	20 pc.	2908516
		Pad	EPS ***PLUS***	1 pc.	W1	20 pc.	2411111
		Pad bolt on	EPS ***PLUS*** bolt on	1 pc.	W1	20 pc.	2650002
		Bolt	Poly Grip	1 pc.	W1	20 pc.	18501
		Set of bolts for pads.	EPS ***PLUS***	100 pc.	W1	20 pc.	2103002
		Bolt set for track pads (incl. nuts)	EPS ***PLUS***; EPS ***PLUS*** bolt on	100 pc.	W1	20 pc.	2064533
W 100 F	0810	Baseplate	EPS ***PLUS***; EPS ***PLUS*** bolt on	1 pc.	W1	20 pc.	2063489
		Track pad	Poly Grip	1 pc.	W1	20 pc.	150740
		Nut	Poly Grip	1 pc.	W1	20 pc.	18502

Original WIRTGEN

UNDERCARRIAGE CRAWLER DRIVE

TRACK PADS							
Series code	Serial code	Part	Track pad system	Packaging unit	Crawler size	Track pads per crawler unit	Part no.
W 100 F	0810	For track pads (incl. nuts)	EPS ***PLUS*** bolt on	1 pc.	W1	20 pc.	2615388
		Nut set for pads	EPS ***PLUS*** bolt on	100 pc.	W1	20 pc.	2908516
		Pad	EPS ***PLUS***	1 pc.	W1	20 pc.	2411111
		Pad bolt on	EPS ***PLUS*** bolt on	1 pc.	W1	20 pc.	2650002
		Bolt	Poly Grip	1 pc.	W1	20 pc.	18501
		Set of bolts for pads.	EPS ***PLUS***	100 pc.	W1	20 pc.	2103002
		Bolt set for track pads (incl. nuts)	EPS ***PLUS***; EPS ***PLUS*** bolt on	100 pc.	W1	20 pc.	2064533
W 100 Fi	1310	Baseplate	EPS ***PLUS***; EPS ***PLUS*** bolt on	1 pc.	W1	20 pc.	2063489
		Track pad	Poly Grip	1 pc.	W1	20 pc.	150740
		Nut	Poly Grip	1 pc.	W1	20 pc.	18502
		For track pads (incl. nuts)	EPS ***PLUS*** bolt on	1 pc.	W1	20 pc.	2615388
		Nut set for pads	EPS ***PLUS*** bolt on	100 pc.	W1	20 pc.	2908516
		Pad	EPS ***PLUS***	1 pc.	W1	20 pc.	2411111
		Pad bolt on	EPS ***PLUS*** bolt on	1 pc.	W1	20 pc.	2650002
		Bolt	Poly Grip	1 pc.	W1	20 pc.	18501
		Set of bolts for pads.	EPS ***PLUS***	100 pc.	W1	20 pc.	2103002
		Bolt set for track pads (incl. nuts)	EPS ***PLUS***; EPS ***PLUS*** bolt on	100 pc.	W1	20 pc.	2064533
W 100 CF	1710	Baseplate	EPS ***PLUS***; EPS ***PLUS*** bolt on	1 pc.	W1	20 pc.	2063489
		For track pads (incl. nuts)	EPS ***PLUS*** bolt on	1 pc.	W1	20 pc.	2615388
		Nut set for pads	EPS ***PLUS*** bolt on	100 pc.	W1	20 pc.	2908516
		Pad	EPS ***PLUS***	1 pc.	W1	20 pc.	2411111
		Pad bolt on	EPS ***PLUS*** bolt on	1 pc.	W1	20 pc.	2650002
		Set of bolts for pads.	EPS ***PLUS***	100 pc.	W1	20 pc.	2103002
		Bolt set for track pads (incl. nuts)	EPS ***PLUS***; EPS ***PLUS*** bolt on	100 pc.	W1	20 pc.	2064533
W 100 CFi	1810	Baseplate	EPS ***PLUS***; EPS ***PLUS*** bolt on	1 pc.	W1	20 pc.	2063489
		For track pads (incl. nuts)	EPS ***PLUS*** bolt on	1 pc.	W1	20 pc.	2615388

TRACK PADS

Series code	Serial code	Part	Track pad system	Packaging unit	Crawler size	Track pads per crawler unit	Part no.
W 100 CFi	1810	Nut set for pads	EPS ***PLUS*** bolt on	100 pc.	W1	20 pc.	2908516
		Pad	EPS ***PLUS***	1 pc.	W1	20 pc.	2411111
		Pad bolt on	EPS ***PLUS*** bolt on	1 pc.	W1	20 pc.	2650002
		Set of bolts for pads.	EPS ***PLUS***	100 pc.	W1	20 pc.	2103002
		Bolt set for track pads (incl. nuts)	EPS ***PLUS***; EPS ***PLUS*** bolt on	100 pc.	W1	20 pc.	2064533
W 100 XFi	1810	Baseplate	EPS ***PLUS***; EPS ***PLUS*** bolt on	1 pc.	W1	20 pc.	2063489
		For track pads (incl. nuts)	EPS ***PLUS*** bolt on	1 pc.	W1	20 pc.	2615388
		Nut set for pads	EPS ***PLUS*** bolt on	100 pc.	W1	20 pc.	2908516
		Pad	EPS ***PLUS***	1 pc.	W1	20 pc.	2411111
		Pad bolt on	EPS ***PLUS*** bolt on	1 pc.	W1	20 pc.	2650002
		Set of bolts for pads.	EPS ***PLUS***	100 pc.	W1	20 pc.	2103002
		Bolt set for track pads (incl. nuts)	EPS ***PLUS***; EPS ***PLUS*** bolt on	100 pc.	W1	20 pc.	2064533
W 1200 F	0710	Baseplate	EPS ***PLUS***; EPS ***PLUS*** bolt on	1 pc.	W1	20 pc.	2063489
		Track pad	Poly Grip	1 pc.	W1	20 pc.	150740
		Nut	Poly Grip	1 pc.	W1	20 pc.	18502
		For track pads (incl. nuts)	EPS ***PLUS*** bolt on	1 pc.	W1	20 pc.	2615388
		Nut set for pads	EPS ***PLUS*** bolt on	100 pc.	W1	20 pc.	2908516
		Pad	EPS ***PLUS***	1 pc.	W1	20 pc.	2411111
		Pad bolt on	EPS ***PLUS*** bolt on	1 pc.	W1	20 pc.	2650002
		Bolt	Poly Grip	1 pc.	W1	20 pc.	18501
		Set of bolts for pads.	EPS ***PLUS***	100 pc.	W1	20 pc.	2103002
		Bolt set for track pads (incl. nuts)	EPS ***PLUS***; EPS ***PLUS*** bolt on	100 pc.	W1	20 pc.	2064533
W 120 F	0810	Baseplate	EPS ***PLUS***; EPS ***PLUS*** bolt on	1 pc.	W1	20 pc.	2063489
		Track pad	Poly Grip	1 pc.	W1	20 pc.	150740
		Nut	Poly Grip	1 pc.	W1	20 pc.	18502
		For track pads (incl. nuts)	EPS ***PLUS*** bolt on	1 pc.	W1	20 pc.	2615388

Original WIRTGEN

UNDERCARRIAGE CRAWLER DRIVE

TRACK PADS							
Series code	Serial code	Part	Track pad system	Packaging unit	Crawler size	Track pads per crawler unit	Part no.
W 120 F	0810	Nut set for pads	EPS ***PLUS*** bolt on	100 pc.	W1	20 pc.	2908516
		Pad	EPS ***PLUS***	1 pc.	W1	20 pc.	2411111
		Pad bolt on	EPS ***PLUS*** bolt on	1 pc.	W1	20 pc.	2650002
		Bolt	Poly Grip	1 pc.	W1	20 pc.	18501
		Set of bolts for pads.	EPS ***PLUS***	100 pc.	W1	20 pc.	2103002
		Bolt set for track pads (incl. nuts)	EPS ***PLUS***; EPS ***PLUS*** bolt on	100 pc.	W1	20 pc.	2064533
W 120 Fi	1310	Baseplate	EPS ***PLUS***; EPS ***PLUS*** bolt on	1 pc.	W1	20 pc.	2063489
		Track pad	Poly Grip	1 pc.	W1	20 pc.	150740
		Nut	Poly Grip	1 pc.	W1	20 pc.	18502
		For track pads (incl. nuts)	EPS ***PLUS*** bolt on	1 pc.	W1	20 pc.	2615388
		Nut set for pads	EPS ***PLUS*** bolt on	100 pc.	W1	20 pc.	2908516
		Pad	EPS ***PLUS***	1 pc.	W1	20 pc.	2411111
		Pad bolt on	EPS ***PLUS*** bolt on	1 pc.	W1	20 pc.	2650002
		Bolt	Poly Grip	1 pc.	W1	20 pc.	18501
		Set of bolts for pads.	EPS ***PLUS***	100 pc.	W1	20 pc.	2103002
		Bolt set for track pads (incl. nuts)	EPS ***PLUS***; EPS ***PLUS*** bolt on	100 pc.	W1	20 pc.	2064533
W 120 CF	1710	Baseplate	EPS ***PLUS***; EPS ***PLUS*** bolt on	1 pc.	W1	20 pc.	2063489
		For track pads (incl. nuts)	EPS ***PLUS*** bolt on	1 pc.	W1	20 pc.	2615388
		Nut set for pads	EPS ***PLUS*** bolt on	100 pc.	W1	20 pc.	2908516
		Pad	EPS ***PLUS***	1 pc.	W1	20 pc.	2411111
		Pad bolt on	EPS ***PLUS*** bolt on	1 pc.	W1	20 pc.	2650002
		Set of bolts for pads.	EPS ***PLUS***	100 pc.	W1	20 pc.	2103002
		Bolt set for track pads (incl. nuts)	EPS ***PLUS***; EPS ***PLUS*** bolt on	100 pc.	W1	20 pc.	2064533
W 120 CFi	1810	Baseplate	EPS ***PLUS***; EPS ***PLUS*** bolt on	1 pc.	W1	20 pc.	2063489
		For track pads (incl. nuts)	EPS ***PLUS*** bolt on	1 pc.	W1	20 pc.	2615388
		Nut set for pads	EPS ***PLUS*** bolt on	100 pc.	W1	20 pc.	2908516

TRACK PADS

Series code	Serial code	Part	Track pad system	Packaging unit	Crawler size	Track pads per crawler unit	Part no.
W 120 CFi	1810	Pad	EPS ***PLUS***	1 pc.	W1	20 pc.	2411111
		Pad bolt on	EPS ***PLUS*** bolt on	1 pc.	W1	20 pc.	2650002
		Set of bolts for pads.	EPS ***PLUS***	100 pc.	W1	20 pc.	2103002
		Bolt set for track pads (incl. nuts)	EPS ***PLUS***; EPS ***PLUS*** bolt on	100 pc.	W1	20 pc.	2064533
W 120 XTi	1810	Baseplate	EPS ***PLUS***; EPS ***PLUS*** bolt on	1 pc.	W1	20 pc.	2063489
		For track pads (incl. nuts)	EPS ***PLUS*** bolt on	1 pc.	W1	20 pc.	2615388
		Nut set for pads	EPS ***PLUS*** bolt on	100 pc.	W1	20 pc.	2908516
		Pad	EPS ***PLUS***	1 pc.	W1	20 pc.	2411111
		Pad bolt on	EPS ***PLUS*** bolt on	1 pc.	W1	20 pc.	2650002
		Set of bolts for pads.	EPS ***PLUS***	100 pc.	W1	20 pc.	2103002
		Bolt set for track pads (incl. nuts)	EPS ***PLUS***; EPS ***PLUS*** bolt on	100 pc.	W1	20 pc.	2064533
W 120 XFi	1810	Baseplate	EPS ***PLUS***; EPS ***PLUS*** bolt on	1 pc.	W1	20 pc.	2063489
		For track pads (incl. nuts)	EPS ***PLUS*** bolt on	1 pc.	W1	20 pc.	2615388
		Nut set for pads	EPS ***PLUS*** bolt on	100 pc.	W1	20 pc.	2908516
		Pad	EPS ***PLUS***	1 pc.	W1	20 pc.	2411111
		Pad bolt on	EPS ***PLUS*** bolt on	1 pc.	W1	20 pc.	2650002
		Set of bolts for pads.	EPS ***PLUS***	100 pc.	W1	20 pc.	2103002
		Bolt set for track pads (incl. nuts)	EPS ***PLUS***; EPS ***PLUS*** bolt on	100 pc.	W1	20 pc.	2064533
W 120 Fi	2710	Baseplate	EPS ***PLUS***; EPS ***PLUS*** bolt on	1 pc.	W1	20 pc.	2063489
		For track pads (incl. nuts)	EPS ***PLUS*** bolt on	1 pc.	W1	20 pc.	2615388
		Nut set for pads	EPS ***PLUS*** bolt on	100 pc.	W1	20 pc.	2908516
		Pad	EPS ***PLUS***	1 pc.	W1	20 pc.	2411111
		Pad bolt on	EPS ***PLUS*** bolt on	1 pc.	W1	20 pc.	2650002
		Set of bolts for pads.	EPS ***PLUS***	100 pc.	W1	20 pc.	2103002
		Bolt set for track pads (incl. nuts)	EPS ***PLUS***; EPS ***PLUS*** bolt on	100 pc.	W1	20 pc.	2064533
W 120 FTi	2710	Baseplate	EPS ***PLUS***; EPS ***PLUS*** bolt on	1 pc.	W1	20 pc.	2063489

UNDERCARRIAGE CRAWLER DRIVE

TRACK PADS							
Series code	Serial code	Part	Track pad system	Packaging unit	Crawler size	Track pads per crawler unit	Part no.
W 120 FTi	2710	For track pads (incl. nuts)	EPS ***PLUS*** bolt on	1 pc.	W1	20 pc.	2615388
		Nut set for pads	EPS ***PLUS*** bolt on	100 pc.	W1	20 pc.	2908516
		Pad	EPS ***PLUS***	1 pc.	W1	20 pc.	2411111
		Pad bolt on	EPS ***PLUS*** bolt on	1 pc.	W1	20 pc.	2650002
		Set of bolts for pads.	EPS ***PLUS***	100 pc.	W1	20 pc.	2103002
		Bolt set for track pads (incl. nuts)	EPS ***PLUS***; EPS ***PLUS*** bolt on	100 pc.	W1	20 pc.	2064533
W 1300 F	0710	Baseplate	EPS ***PLUS***; EPS ***PLUS*** bolt on	1 pc.	W1	20 pc.	2063489
		Track pad	Poly Grip	1 pc.	W1	20 pc.	150740
		Nut	Poly Grip	1 pc.	W1	20 pc.	18502
		For track pads (incl. nuts)	EPS ***PLUS*** bolt on	1 pc.	W1	20 pc.	2615388
		Nut set for pads	EPS ***PLUS*** bolt on	100 pc.	W1	20 pc.	2908516
		Pad	EPS ***PLUS***	1 pc.	W1	20 pc.	2411111
		Pad bolt on	EPS ***PLUS*** bolt on	1 pc.	W1	20 pc.	2650002
		Bolt	Poly Grip	1 pc.	W1	20 pc.	18501
		Set of bolts for pads.	EPS ***PLUS***	100 pc.	W1	20 pc.	2103002
		Bolt set for track pads (incl. nuts)	EPS ***PLUS***; EPS ***PLUS*** bolt on	100 pc.	W1	20 pc.	2064533
W 130 F	0810	Baseplate	EPS ***PLUS***; EPS ***PLUS*** bolt on	1 pc.	W1	20 pc.	2063489
		Track pad	Poly Grip	1 pc.	W1	20 pc.	150740
		Nut	Poly Grip	1 pc.	W1	20 pc.	18502
		For track pads (incl. nuts)	EPS ***PLUS*** bolt on	1 pc.	W1	20 pc.	2615388
		Nut set for pads	EPS ***PLUS*** bolt on	100 pc.	W1	20 pc.	2908516
		Pad	EPS ***PLUS***	1 pc.	W1	20 pc.	2411111
		Pad bolt on	EPS ***PLUS*** bolt on	1 pc.	W1	20 pc.	2650002
		Bolt	Poly Grip	1 pc.	W1	20 pc.	18501
		Set of bolts for pads.	EPS ***PLUS***	100 pc.	W1	20 pc.	2103002
		Bolt set for track pads (incl. nuts)	EPS ***PLUS***; EPS ***PLUS*** bolt on	100 pc.	W1	20 pc.	2064533

TRACK PADS

Series code	Serial code	Part	Track pad system	Packaging unit	Crawler size	Track pads per crawler unit	Part no.
W 130 Fi	1310	Baseplate	EPS ***PLUS***; EPS ***PLUS*** bolt on	1 pc.	W1	20 pc.	2063489
		Track pad	Poly Grip	1 pc.	W1	20 pc.	150740
		Nut	Poly Grip	1 pc.	W1	20 pc.	18502
		For track pads (incl. nuts)	EPS ***PLUS*** bolt on	1 pc.	W1	20 pc.	2615388
		Nut set for pads	EPS ***PLUS*** bolt on	100 pc.	W1	20 pc.	2908516
		Pad	EPS ***PLUS***	1 pc.	W1	20 pc.	2411111
		Pad bolt on	EPS ***PLUS*** bolt on	1 pc.	W1	20 pc.	2650002
		Bolt	Poly Grip	1 pc.	W1	20 pc.	18501
		Set of bolts for pads.	EPS ***PLUS***	100 pc.	W1	20 pc.	2103002
		Bolt set for track pads (incl. nuts)	EPS ***PLUS***; EPS ***PLUS*** bolt on	100 pc.	W1	20 pc.	2064533
W 130 CF	1710	Baseplate	EPS ***PLUS***; EPS ***PLUS*** bolt on	1 pc.	W1	20 pc.	2063489
		For track pads (incl. nuts)	EPS ***PLUS*** bolt on	1 pc.	W1	20 pc.	2615388
		Nut set for pads	EPS ***PLUS*** bolt on	100 pc.	W1	20 pc.	2908516
		Pad	EPS ***PLUS***	1 pc.	W1	20 pc.	2411111
		Pad bolt on	EPS ***PLUS*** bolt on	1 pc.	W1	20 pc.	2650002
		Set of bolts for pads.	EPS ***PLUS***	100 pc.	W1	20 pc.	2103002
		Bolt set for track pads (incl. nuts)	EPS ***PLUS***; EPS ***PLUS*** bolt on	100 pc.	W1	20 pc.	2064533
W 130 CFi	1810	Baseplate	EPS ***PLUS***; EPS ***PLUS*** bolt on	1 pc.	W1	20 pc.	2063489
		For track pads (incl. nuts)	EPS ***PLUS*** bolt on	1 pc.	W1	20 pc.	2615388
		Nut set for pads	EPS ***PLUS*** bolt on	100 pc.	W1	20 pc.	2908516
		Pad	EPS ***PLUS***	1 pc.	W1	20 pc.	2411111
		Pad bolt on	EPS ***PLUS*** bolt on	1 pc.	W1	20 pc.	2650002
		Set of bolts for pads.	EPS ***PLUS***	100 pc.	W1	20 pc.	2103002
		Bolt set for track pads (incl. nuts)	EPS ***PLUS***; EPS ***PLUS*** bolt on	100 pc.	W1	20 pc.	2064533
W 130 XFi	1810	Baseplate	EPS ***PLUS***; EPS ***PLUS*** bolt on	1 pc.	W1	20 pc.	2063489
		For track pads (incl. nuts)	EPS ***PLUS*** bolt on	1 pc.	W1	20 pc.	2615388

Original WIRTGEN

UNDERCARRIAGE CRAWLER DRIVE

TRACK PADS							
Series code	Serial code	Part	Track pad system	Packaging unit	Crawler size	Track pads per crawler unit	Part no.
W 130 XFi	1810	Nut set for pads	EPS ***PLUS*** bolt on	100 pc.	W1	20 pc.	2908516
		Pad	EPS ***PLUS***	1 pc.	W1	20 pc.	2411111
		Pad bolt on	EPS ***PLUS*** bolt on	1 pc.	W1	20 pc.	2650002
		Set of bolts for pads.	EPS ***PLUS***	100 pc.	W1	20 pc.	2103002
		Bolt set for track pads (incl. nuts)	EPS ***PLUS***; EPS ***PLUS*** bolt on	100 pc.	W1	20 pc.	2064533
W 130 Fi	2710	Baseplate	EPS ***PLUS***; EPS ***PLUS*** bolt on	1 pc.	W1	20 pc.	2063489
		For track pads (incl. nuts)	EPS ***PLUS*** bolt on	1 pc.	W1	20 pc.	2615388
		Nut set for pads	EPS ***PLUS*** bolt on	100 pc.	W1	20 pc.	2908516
		Pad	EPS ***PLUS***	1 pc.	W1	20 pc.	2411111
		Pad bolt on	EPS ***PLUS*** bolt on	1 pc.	W1	20 pc.	2650002
		Set of bolts for pads.	EPS ***PLUS***	100 pc.	W1	20 pc.	2103002
		Bolt set for track pads (incl. nuts)	EPS ***PLUS***; EPS ***PLUS*** bolt on	100 pc.	W1	20 pc.	2064533
W 1500	0820	Baseplate	EPS ***PLUS***; EPS ***PLUS*** bolt on	1 pc.	W1	24 pc.	2063489
		Track pad	Poly Grip	1 pc.	W1	24 pc.	150740
		Nut	Poly Grip	1 pc.	W1	24 pc.	18502
		For track pads (incl. nuts)	EPS ***PLUS*** bolt on	1 pc.	W1	24 pc.	2615388
		Nut set for pads	EPS ***PLUS*** bolt on	100 pc.	W1	24 pc.	2908516
		Pad	EPS ***PLUS***	1 pc.	W1	24 pc.	2411111
		Pad bolt on	EPS ***PLUS*** bolt on	1 pc.	W1	24 pc.	2650002
		Bolt	Poly Grip	1 pc.	W1	24 pc.	18501
		Set of bolts for pads.	EPS ***PLUS***	100 pc.	W1	24 pc.	2103002
		Bolt set for track pads (incl. nuts)	EPS ***PLUS***; EPS ***PLUS*** bolt on	100 pc.	W1	24 pc.	2064533
W 150	0513	Baseplate	EPS ***PLUS***; EPS ***PLUS*** bolt on	1 pc.	W1	20 pc.	2063489
		Track pad	Poly Grip	1 pc.	W1	20 pc.	150740
		Nut	Poly Grip	1 pc.	W1	20 pc.	18502
		For track pads (incl. nuts)	EPS ***PLUS*** bolt on	1 pc.	W1	20 pc.	2615388

TRACK PADS

Series code	Serial code	Part	Track pad system	Packaging unit	Crawler size	Track pads per crawler unit	Part no.
W 150	0513	Nut set for pads	EPS ***PLUS*** bolt on	100 pc.	W1	20 pc.	2908516
		Pad	EPS ***PLUS***	1 pc.	W1	20 pc.	2411111
		Pad bolt on	EPS ***PLUS*** bolt on	1 pc.	W1	20 pc.	2650002
		Bolt	Poly Grip	1 pc.	W1	20 pc.	18501
		Set of bolts for pads.	EPS ***PLUS***	100 pc.	W1	20 pc.	2103002
		Bolt set for track pads (incl. nuts)	EPS ***PLUS***; EPS ***PLUS*** bolt on	100 pc.	W1	20 pc.	2064533
W 150i	0613	Baseplate	EPS ***PLUS***; EPS ***PLUS*** bolt on	1 pc.	W1	20 pc.	2063489
		Track pad	Poly Grip	1 pc.	W1	20 pc.	150740
		Nut	Poly Grip	1 pc.	W1	20 pc.	18502
		For track pads (incl. nuts)	EPS ***PLUS*** bolt on	1 pc.	W1	20 pc.	2615388
		Nut set for pads	EPS ***PLUS*** bolt on	100 pc.	W1	20 pc.	2908516
		Pad	EPS ***PLUS***	1 pc.	W1	20 pc.	2411111
		Pad bolt on	EPS ***PLUS*** bolt on	1 pc.	W1	20 pc.	2650002
		Bolt	Poly Grip	1 pc.	W1	20 pc.	18501
		Set of bolts for pads.	EPS ***PLUS***	100 pc.	W1	20 pc.	2103002
		Bolt set for track pads (incl. nuts)	EPS ***PLUS***; EPS ***PLUS*** bolt on	100 pc.	W1	20 pc.	2064533
W 150 CF	0713	Baseplate	EPS ***PLUS***; EPS ***PLUS*** bolt on	1 pc.	W1	20 pc.	2063489
		For track pads (incl. nuts)	EPS ***PLUS*** bolt on	1 pc.	W1	20 pc.	2615388
		Nut set for pads	EPS ***PLUS*** bolt on	100 pc.	W1	20 pc.	2908516
		Pad	EPS ***PLUS***	1 pc.	W1	20 pc.	2411111
		Pad bolt on	EPS ***PLUS*** bolt on	1 pc.	W1	20 pc.	2650002
		Set of bolts for pads.	EPS ***PLUS***	100 pc.	W1	20 pc.	2103002
		Bolt set for track pads (incl. nuts)	EPS ***PLUS***; EPS ***PLUS*** bolt on	100 pc.	W1	20 pc.	2064533
W 150 CFi	0813	Baseplate	EPS ***PLUS***; EPS ***PLUS*** bolt on	1 pc.	W1	20 pc.	2063489
		For track pads (incl. nuts)	EPS ***PLUS*** bolt on	1 pc.	W1	20 pc.	2615388
		Nut set for pads	EPS ***PLUS*** bolt on	100 pc.	W1	20 pc.	2908516

UNDERCARRIAGE CRAWLER DRIVE

TRACK PADS

Series code	Serial code	Part	Track pad system	Packaging unit	Crawler size	Track pads per crawler unit	Part no.
W 150 CFi	0813	Pad	EPS ***PLUS***	1 pc.	W1	20 pc.	2411111
		Pad bolt on	EPS ***PLUS*** bolt on	1 pc.	W1	20 pc.	2650002
		Set of bolts for pads.	EPS ***PLUS***	100 pc.	W1	20 pc.	2103002
		Bolt set for track pads (incl. nuts)	EPS ***PLUS***; EPS ***PLUS*** bolt on	100 pc.	W1	20 pc.	2064533
W 150 XFi	0813	Baseplate	EPS ***PLUS***; EPS ***PLUS*** bolt on	1 pc.	W1	20 pc.	2063489
		For track pads (incl. nuts)	EPS ***PLUS*** bolt on	1 pc.	W1	20 pc.	2615388
		Nut set for pads	EPS ***PLUS*** bolt on	100 pc.	W1	20 pc.	2908516
		Pad	EPS ***PLUS***	1 pc.	W1	20 pc.	2411111
		Pad bolt on	EPS ***PLUS*** bolt on	1 pc.	W1	20 pc.	2650002
		Set of bolts for pads.	EPS ***PLUS***	100 pc.	W1	20 pc.	2103002
		Bolt set for track pads (incl. nuts)	EPS ***PLUS***; EPS ***PLUS*** bolt on	100 pc.	W1	20 pc.	2064533
W 1900	0820, 0920, 1020	Baseplate	EPS ***PLUS***; EPS ***PLUS*** bolt on	1 pc.	W1	24 pc.	2063489
		Track pad	Poly Grip	1 pc.	W1	24 pc.	150740
		Nut	Poly Grip	1 pc.	W1	24 pc.	18502
		For track pads (incl. nuts)	EPS ***PLUS*** bolt on	1 pc.	W1	24 pc.	2615388
		Nut set for pads	EPS ***PLUS*** bolt on	100 pc.	W1	24 pc.	2908516
		Pad	EPS ***PLUS***	1 pc.	W1	24 pc.	2411111
		Pad bolt on	EPS ***PLUS*** bolt on	1 pc.	W1	24 pc.	2650002
		Bolt	Poly Grip	1 pc.	W1	24 pc.	18501
		Set of bolts for pads.	EPS ***PLUS***	100 pc.	W1	24 pc.	2103002
		Bolt set for track pads (incl. nuts)	EPS ***PLUS***; EPS ***PLUS*** bolt on	100 pc.	W1	24 pc.	2064533
W 195	1820	Baseplate	EPS ***PLUS***; EPS ***PLUS*** bolt on	1 pc.	W1	24 pc.	2063489
		For track pads (incl. nuts)	EPS ***PLUS*** bolt on	1 pc.	W1	24 pc.	2615388
		Nut set for pads	EPS ***PLUS*** bolt on	100 pc.	W1	24 pc.	2908516
		Pad	EPS ***PLUS***	1 pc.	W1	24 pc.	2411111
		Pad bolt on	EPS ***PLUS*** bolt on	1 pc.	W1	24 pc.	2650002

TRACK PADS

Series code	Serial code	Part	Track pad system	Packaging unit	Crawler size	Track pads per crawler unit	Part no.
W 195	1820	Set of bolts for pads.	EPS ***PLUS***	100 pc.	W1	24 pc.	2103002
		Bolt set for track pads (incl. nuts)	EPS ***PLUS***; EPS ***PLUS*** bolt on	100 pc.	W1	24 pc.	2064533
W 2000	0620, 1120	Baseplate	EPS ***PLUS***; EPS ***PLUS*** bolt on	1 pc.	W3	23 pc.	2063490
		Track pad	Poly Grip	1 pc.	W3	23 pc.	150821
		Nut	Poly Grip	1 pc.	W3	23 pc.	1860
		For track pads (incl. nuts)	EPS ***PLUS*** bolt on	1 pc.	W3	23 pc.	2615388
		Nut set for pads	EPS ***PLUS*** bolt on	100 pc.	W3	23 pc.	2908516
		Pad	EPS ***PLUS***	1 pc.	W3	23 pc.	2411112
		Pad with bolt on	EPS ***PLUS*** bolt on	1 pc.	W3	23 pc.	2650003
		Bolt	Poly Grip	1 pc.	W3	23 pc.	1861
		Set of bolts for pads.	EPS ***PLUS***	100 pc.	W3	23 pc.	2103002
		Bolt set for track pads (incl. nuts)	EPS ***PLUS***; EPS ***PLUS*** bolt on	100 pc.	W3	23 pc.	2064534
W 200	1220	Baseplate	EPS ***PLUS***; EPS ***PLUS*** bolt on	1 pc.	W1	24 pc.	2063489
		For track pads (incl. nuts)	EPS ***PLUS*** bolt on	1 pc.	W1	24 pc.	2615388
		Nut set for pads	EPS ***PLUS*** bolt on	100 pc.	W1	24 pc.	2908516
		Pad	EPS ***PLUS***	1 pc.	W1	24 pc.	2411111
		Pad bolt on	EPS ***PLUS*** bolt on	1 pc.	W1	24 pc.	2650002
		Set of bolts for pads.	EPS ***PLUS***	100 pc.	W1	24 pc.	2103002
		Bolt set for track pads (incl. nuts)	EPS ***PLUS***; EPS ***PLUS*** bolt on	100 pc.	W1	24 pc.	2064533
W 200i	1420	Baseplate	EPS ***PLUS***; EPS ***PLUS*** bolt on	1 pc.	W1	24 pc.	2063489
		For track pads (incl. nuts)	EPS ***PLUS*** bolt on	1 pc.	W1	24 pc.	2615388
		Nut set for pads	EPS ***PLUS*** bolt on	100 pc.	W1	24 pc.	2908516
		Pad	EPS ***PLUS***	1 pc.	W1	24 pc.	2411111
		Pad bolt on	EPS ***PLUS*** bolt on	1 pc.	W1	24 pc.	2650002
		Set of bolts for pads.	EPS ***PLUS***	100 pc.	W1	24 pc.	2103002
		Bolt set for track pads (incl. nuts)	EPS ***PLUS***; EPS ***PLUS*** bolt on	100 pc.	W1	24 pc.	2064533

Original WIRTGEN

UNDERCARRIAGE CRAWLER DRIVE

TRACK PADS							
Series code	Serial code	Part	Track pad system	Packaging unit	Crawler size	Track pads per crawler unit	Part no.
W 200 F	2020	Baseplate	EPS ***PLUS***; EPS ***PLUS*** bolt on	1 pc.	W1	23 pc.	2063489
		For track pads (incl. nuts)	EPS ***PLUS*** bolt on	1 pc.	W1	23 pc.	2615388
		Nut set for pads	EPS ***PLUS*** bolt on	100 pc.	W1	23 pc.	2908516
		Pad	EPS ***PLUS***	1 pc.	W1	23 pc.	2411111
		Pad bolt on	EPS ***PLUS*** bolt on	1 pc.	W1	23 pc.	2650002
		Set of bolts for pads.	EPS ***PLUS***	100 pc.	W1	23 pc.	2103002
		Bolt set for track pads (incl. nuts)	EPS ***PLUS***; EPS ***PLUS*** bolt on	100 pc.	W1	23 pc.	2064533
W 200 Fi	2120	Baseplate	EPS ***PLUS***; EPS ***PLUS*** bolt on	1 pc.	W1	23 pc.	2063489
		For track pads (incl. nuts)	EPS ***PLUS*** bolt on	1 pc.	W1	23 pc.	2615388
		Nut set for pads	EPS ***PLUS*** bolt on	100 pc.	W1	23 pc.	2908516
		Pad	EPS ***PLUS***	1 pc.	W1	23 pc.	2411111
		Pad bolt on	EPS ***PLUS*** bolt on	1 pc.	W1	23 pc.	2650002
		Set of bolts for pads.	EPS ***PLUS***	100 pc.	W1	23 pc.	2103002
		Bolt set for track pads (incl. nuts)	EPS ***PLUS***; EPS ***PLUS*** bolt on	100 pc.	W1	23 pc.	2064533
W 200 H	1620	Baseplate	EPS ***PLUS***; EPS ***PLUS*** bolt on	1 pc.	W1	24 pc.	2063489
		For track pads (incl. nuts)	EPS ***PLUS*** bolt on	1 pc.	W1	24 pc.	2615388
		Nut set for pads	EPS ***PLUS*** bolt on	100 pc.	W1	24 pc.	2908516
		Pad	EPS ***PLUS***	1 pc.	W1	24 pc.	2411111
		Pad bolt on	EPS ***PLUS*** bolt on	1 pc.	W1	24 pc.	2650002
		Set of bolts for pads.	EPS ***PLUS***	100 pc.	W1	24 pc.	2103002
		Bolt set for track pads (incl. nuts)	EPS ***PLUS***; EPS ***PLUS*** bolt on	100 pc.	W1	24 pc.	2064533
W 200 Hi	1720	Baseplate	EPS ***PLUS***; EPS ***PLUS*** bolt on	1 pc.	W1	24 pc.	2063489
		For track pads (incl. nuts)	EPS ***PLUS*** bolt on	1 pc.	W1	24 pc.	2615388
		Nut set for pads	EPS ***PLUS*** bolt on	100 pc.	W1	24 pc.	2908516
		Pad	EPS ***PLUS***	1 pc.	W1	24 pc.	2411111
		Pad bolt on	EPS ***PLUS*** bolt on	1 pc.	W1	24 pc.	2650002

TRACK PADS

Series code	Serial code	Part	Track pad system	Packaging unit	Crawler size	Track pads per crawler unit	Part no.
W 200 Hi	1720	Set of bolts for pads.	EPS ***PLUS***	100 pc.	W1	24 pc.	2103002
		Bolt set for track pads (incl. nuts)	EPS ***PLUS***; EPS ***PLUS*** bolt on	100 pc.	W1	24 pc.	2064533
W 205	2520	Baseplate	EPS ***PLUS***; EPS ***PLUS*** bolt on	1 pc.	W3	23 pc.	2063490
		For track pads (incl. nuts)	EPS ***PLUS*** bolt on	1 pc.	W3	23 pc.	2615388
		Nut set for pads	EPS ***PLUS*** bolt on	100 pc.	W3	23 pc.	2908516
		Pad	EPS ***PLUS***	1 pc.	W3	23 pc.	2411112
		Pad with bolt on	EPS ***PLUS*** bolt on	1 pc.	W3	23 pc.	2650003
		Set of bolts for pads.	EPS ***PLUS***	100 pc.	W3	23 pc.	2103002
		Bolt set for track pads (incl. nuts)	EPS ***PLUS***; EPS ***PLUS*** bolt on	100 pc.	W3	23 pc.	2064534
W 207 Fi	2120	Baseplate	EPS ***PLUS***; EPS ***PLUS*** bolt on	1 pc.	W3	23 pc.	2063490
		For track pads (incl. nuts)	EPS ***PLUS*** bolt on	1 pc.	W3	23 pc.	2615388
		Nut set for pads	EPS ***PLUS*** bolt on	100 pc.	W3	23 pc.	2908516
		Pad	EPS ***PLUS***	1 pc.	W3	23 pc.	2411112
		Pad with bolt on	EPS ***PLUS*** bolt on	1 pc.	W3	23 pc.	2650003
		Set of bolts for pads.	EPS ***PLUS***	100 pc.	W3	23 pc.	2103002
		Bolt set for track pads (incl. nuts)	EPS ***PLUS***; EPS ***PLUS*** bolt on	100 pc.	W3	23 pc.	2064534
W 2100	0921	Baseplate	EPS ***PLUS***	1 pc.	W4	24 pc.	2063491
		Track pad	Poly Grip	1 pc.	W4	24 pc.	144728
		Nut	Poly Grip	1 pc.	W4	24 pc.	37825
		Pad	EPS ***PLUS***	1 pc.	W4	24 pc.	2102698
		Bolt	Poly Grip	1 pc.	W4	24 pc.	37824
		Set of bolts for pads.	EPS ***PLUS***	50 pc.	W4	24 pc.	2103003
		Bolt set for track pads (incl. nuts)	EPS ***PLUS***	50 pc.	W4	24 pc.	2064535
W 210	1320	Baseplate	EPS ***PLUS***; EPS ***PLUS*** bolt on	1 pc.	W3	23 pc.	2063490
		For track pads (incl. nuts)	EPS ***PLUS*** bolt on	1 pc.	W3	23 pc.	2615388
		Nut set for pads	EPS ***PLUS*** bolt on	100 pc.	W3	23 pc.	2908516

UNDERCARRIAGE CRAWLER DRIVE

TRACK PADS							
Series code	Serial code	Part	Track pad system	Packaging unit	Crawler size	Track pads per crawler unit	Part no.
W 210	1320	Pad	EPS ***PLUS***	1 pc.	W3	23 pc.	2411112
		Pad with bolt on	EPS ***PLUS*** bolt on	1 pc.	W3	23 pc.	2650003
		Set of bolts for pads.	EPS ***PLUS***	100 pc.	W3	23 pc.	2103002
		Bolt set for track pads (incl. nuts)	EPS ***PLUS***; EPS ***PLUS*** bolt on	100 pc.	W3	23 pc.	2064534
W 210i	1520	Baseplate	EPS ***PLUS***; EPS ***PLUS*** bolt on	1 pc.	W3	23 pc.	2063490
		For track pads (incl. nuts)	EPS ***PLUS*** bolt on	1 pc.	W3	23 pc.	2615388
		Nut set for pads	EPS ***PLUS*** bolt on	100 pc.	W3	23 pc.	2908516
		Pad	EPS ***PLUS***	1 pc.	W3	23 pc.	2411112
		Pad with bolt on	EPS ***PLUS*** bolt on	1 pc.	W3	23 pc.	2650003
		Set of bolts for pads.	EPS ***PLUS***	100 pc.	W3	23 pc.	2103002
		Bolt set for track pads (incl. nuts)	EPS ***PLUS***; EPS ***PLUS*** bolt on	100 pc.	W3	23 pc.	2064534
W 210 Fi	2320	Baseplate	EPS ***PLUS***; EPS ***PLUS*** bolt on	1 pc.	W3	23 pc.	2063490
		For track pads (incl. nuts)	EPS ***PLUS*** bolt on	1 pc.	W3	23 pc.	2615388
		Nut set for pads	EPS ***PLUS*** bolt on	100 pc.	W3	23 pc.	2908516
		Pad	EPS ***PLUS***	1 pc.	W3	23 pc.	2411112
		Pad with bolt on	EPS ***PLUS*** bolt on	1 pc.	W3	23 pc.	2650003
		Set of bolts for pads.	EPS ***PLUS***	100 pc.	W3	23 pc.	2103002
		Bolt set for track pads (incl. nuts)	EPS ***PLUS***; EPS ***PLUS*** bolt on	100 pc.	W3	23 pc.	2064534
W 210 XP	2420	Baseplate	EPS ***PLUS***; EPS ***PLUS*** bolt on	1 pc.	W3	23 pc.	2063490
		For track pads (incl. nuts)	EPS ***PLUS*** bolt on	1 pc.	W3	23 pc.	2615388
		Nut set for pads	EPS ***PLUS*** bolt on	100 pc.	W3	23 pc.	2908516
		Pad	EPS ***PLUS***	1 pc.	W3	23 pc.	2411112
		Pad with bolt on	EPS ***PLUS*** bolt on	1 pc.	W3	23 pc.	2650003
		Set of bolts for pads.	EPS ***PLUS***	100 pc.	W3	23 pc.	2103002
		Bolt set for track pads (incl. nuts)	EPS ***PLUS***; EPS ***PLUS*** bolt on	100 pc.	W3	23 pc.	2064534
W 215	1920	Baseplate	EPS ***PLUS***; EPS ***PLUS*** bolt on	1 pc.	W3	23 pc.	2063490

TRACK PADS

Series code	Serial code	Part	Track pad system	Packaging unit	Crawler size	Track pads per crawler unit	Part no.
W 215	1920	For track pads (incl. nuts)	EPS ***PLUS*** bolt on	1 pc.	W3	23 pc.	2615388
		Nut set for pads	EPS ***PLUS*** bolt on	100 pc.	W3	23 pc.	2908516
		Pad	EPS ***PLUS***	1 pc.	W3	23 pc.	2411112
		Pad with bolt on	EPS ***PLUS*** bolt on	1 pc.	W3	23 pc.	2650003
		Set of bolts for pads.	EPS ***PLUS***	100 pc.	W3	23 pc.	2103002
		Bolt set for track pads (incl. nuts)	EPS ***PLUS***; EPS ***PLUS*** bolt on	100 pc.	W3	23 pc.	2064534
W 2200	0821	Baseplate	EPS ***PLUS***	1 pc.	W5	26 pc.	2063492
		Track pad	Poly Grip	1 pc.	W5	26 pc.	144727
		Nut	Poly Grip	1 pc.	W5	26 pc.	43499
		Pad	EPS ***PLUS***	1 pc.	W5	26 pc.	2102699
		Bolt	Poly Grip	1 pc.	W5	26 pc.	43500
		Set of bolts for pads.	EPS ***PLUS***	50 pc.	W5	26 pc.	2103003
		Bolt set for track pads (incl. nuts)	EPS ***PLUS***	50 pc.	W5	26 pc.	2064536
W 220	0522	Baseplate	EPS ***PLUS***	1 pc.	W4	24 pc.	2063491
		Pad	EPS ***PLUS***	1 pc.	W4	24 pc.	2102698
		Set of bolts for pads.	EPS ***PLUS***	50 pc.	W4	24 pc.	2103003
		Bolt set for track pads (incl. nuts)	EPS ***PLUS***	50 pc.	W4	24 pc.	2064535
W 220i	0722	Baseplate	EPS ***PLUS***	1 pc.	W4	24 pc.	2063491
		Pad	EPS ***PLUS***	1 pc.	W4	24 pc.	2102698
		Set of bolts for pads.	EPS ***PLUS***	50 pc.	W4	24 pc.	2103003
		Bolt set for track pads (incl. nuts)	EPS ***PLUS***	50 pc.	W4	24 pc.	2064535
W 220 Fi	1122	Baseplate	EPS ***PLUS***	1 pc.	W4	24 pc.	2063491
		Pad	EPS ***PLUS***	1 pc.	W4	24 pc.	2102698
		Set of bolts for pads.	EPS ***PLUS***	50 pc.	W4	24 pc.	2103003
		Bolt set for track pads (incl. nuts)	EPS ***PLUS***	50 pc.	W4	24 pc.	2064535
W 250	0422	Baseplate	EPS ***PLUS***	1 pc.	W5	26 pc.	2063492

UNDERCARRIAGE CRAWLER DRIVE

TRACK PADS							
Series code	Serial code	Part	Track pad system	Packaging unit	Crawler size	Track pads per crawler unit	Part no.
W 250	0422	Pad	EPS ***PLUS***	1 pc.	W5	26 pc.	2102699
		Set of bolts for pads.	EPS ***PLUS***	50 pc.	W5	26 pc.	2103003
		Bolt set for track pads (incl. nuts)	EPS ***PLUS***	50 pc.	W5	26 pc.	2064536
W 250i	0622	Baseplate	EPS ***PLUS***	1 pc.	W5	26 pc.	2063492
		Pad	EPS ***PLUS***	1 pc.	W5	26 pc.	2102699
		Set of bolts for pads.	EPS ***PLUS***	50 pc.	W5	26 pc.	2103003
		Bolt set for track pads (incl. nuts)	EPS ***PLUS***	50 pc.	W5	26 pc.	2064536
W 250 Fi	1322	Baseplate	EPS ***PLUS***	1 pc.	W5	26 pc.	2063492
		Pad	EPS ***PLUS***	1 pc.	W5	26 pc.	2102699
		Set of bolts for pads.	EPS ***PLUS***	50 pc.	W5	26 pc.	2103003
		Bolt set for track pads (incl. nuts)	EPS ***PLUS***	50 pc.	W5	26 pc.	2064536
2200 CR	0821	Baseplate	EPS ***PLUS***	1 pc.	W5	26 pc.	2063492
		Pad	EPS ***PLUS***	1 pc.	W5	26 pc.	2102699
		Set of bolts for pads.	EPS ***PLUS***	50 pc.	W5	26 pc.	2103003
		Bolt set for track pads (incl. nuts)	EPS ***PLUS***	50 pc.	W5	26 pc.	2064536
W 240 CR	03CR	Baseplate	EPS ***PLUS***	1 pc.	W5	26 pc.	2063492
		Pad	EPS ***PLUS***	1 pc.	W5	26 pc.	2102699
		Set of bolts for pads.	EPS ***PLUS***	50 pc.	W5	26 pc.	2103003
		Bolt set for track pads (incl. nuts)	EPS ***PLUS***	50 pc.	W5	26 pc.	2064536
W 240 CRi	04CR	Baseplate	EPS ***PLUS***	1 pc.	W5	26 pc.	2063492
		Pad	EPS ***PLUS***	1 pc.	W5	26 pc.	2102699
		Set of bolts for pads.	EPS ***PLUS***	50 pc.	W5	26 pc.	2103003
		Bolt set for track pads (incl. nuts)	EPS ***PLUS***	50 pc.	W5	26 pc.	2064536
W 380 CR	03CR	Baseplate	EPS ***PLUS***	1 pc.	W5	26 pc.	2063492
		Pad	EPS ***PLUS***	1 pc.	W5	26 pc.	2102699
		Set of bolts for pads.	EPS ***PLUS***	50 pc.	W5	26 pc.	2103003

TRACK PADS

Series code	Serial code	Part	Track pad system	Packaging unit	Crawler size	Track pads per crawler unit	Part no.
W 380 CR	03CR	Bolt set for track pads (incl. nuts)	EPS ***PLUS***	50 pc.	W5	26 pc.	2064536
W 380 CRi	04CR	Baseplate	EPS ***PLUS***	1 pc.	W5	26 pc.	2063492
		Pad	EPS ***PLUS***	1 pc.	W5	26 pc.	2102699
		Set of bolts for pads.	EPS ***PLUS***	50 pc.	W5	26 pc.	2103003
		Bolt set for track pads (incl. nuts)	EPS ***PLUS***	50 pc.	W5	26 pc.	2064536
SP 150	09SP	Track pad	Poly Grip	1 pc.	W1	20 pc.	150740
		Nut	Poly Grip	1 pc.	W1	20 pc.	18502
		Bolt	Poly Grip	1 pc.	W1	20 pc.	18501
SP 15	12SP	Track pad	Poly Grip	1 pc.	W1	20 pc.	150740
		Nut	Poly Grip	1 pc.	W1	20 pc.	18502
		Bolt	Poly Grip	1 pc.	W1	20 pc.	18501
SP 15i	14SP	Track pad	Poly Grip	1 pc.	W1	20 pc.	150740
		Nut	Poly Grip	1 pc.	W1	20 pc.	18502
		Bolt	Poly Grip	1 pc.	W1	20 pc.	18501
SP 250	08SP	Track pad	Poly Grip	1 pc.	W0	27 pc.	151757
		Nut	Poly Grip	1 pc.	W0	27 pc.	120553
		Bolt	Poly Grip	1 pc.	W0	27 pc.	120552
SP 25	13SP	Track pad	Poly Grip	1 pc.	W0	27 pc.	151757
		Nut	Poly Grip	1 pc.	W0	27 pc.	120553
		Bolt	Poly Grip	1 pc.	W0	27 pc.	120552
SP 25i	15SP	Track pad	Poly Grip	1 pc.	W0	27 pc.	151757
		Nut	Poly Grip	1 pc.	W0	27 pc.	120553
		Bolt	Poly Grip	1 pc.	W0	27 pc.	120552
SP 500	10SP	Track pad	Poly Grip	1 pc.	W0	27 pc.	151757
		Nut	Poly Grip	1 pc.	W0	27 pc.	120553
		Bolt	Poly Grip	1 pc.	W0	27 pc.	120552

Original WIRTGEN

UNDERCARRIAGE CRAWLER DRIVE

CRAWLER UNIT CHAINS

High-strength genuine WIRTGEN crawler unit chains achieve an exceptionally long service life, even under extreme construction site conditions, and thus always ensure a reliable transfer of traction.

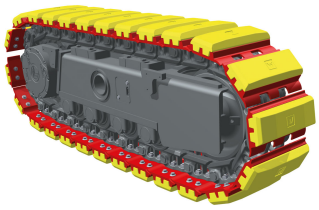

CRAWLER UNIT CHAINS

Series code	Serial code	Series range	Track pad system	Version	Crawler size	Pads per crawler unit	Part no.
W 100 Fi	2710	1 - 9999	EPS ***PLUS***; Poly Grip; EPS ***PLUS*** bolt on	without track pads	W1	20 pcs.	131296
			Poly Grip	pre-assembled with Poly Grip track pads	W1	20 pcs.	131303
			EPS ***PLUS***	pre-assembled with EPS ***PLUS*** track pads	W1	20 pcs.	2121472
W 1000 F	0710	1 - 9999	EPS ***PLUS***; Poly Grip; EPS ***PLUS*** bolt on	without track pads	W1	20 pcs.	131296
			EPS ***PLUS***	pre-assembled with EPS ***PLUS*** track pads	W1	20 pcs.	2121472
			Poly Grip	pre-assembled with Poly Grip track pads	W1	20 pcs.	131303
W 100 F	0810	1 - 9999	EPS ***PLUS***; Poly Grip; EPS ***PLUS*** bolt on	without track pads	W1	20 pcs.	131296
			EPS ***PLUS***	pre-assembled with EPS ***PLUS*** track pads	W1	20 pcs.	2121472
			Poly Grip	pre-assembled with Poly Grip track pads	W1	20 pcs.	131303
W 100 Fi	1310	1 - 9999	EPS ***PLUS***; Poly Grip; EPS ***PLUS*** bolt on	without track pads	W1	20 pcs.	131296
			EPS ***PLUS***	pre-assembled with EPS ***PLUS*** track pads	W1	20 pcs.	2121472
			Poly Grip	pre-assembled with Poly Grip track pads	W1	20 pcs.	131303
W 100 CF	1710	1 - 9999	EPS ***PLUS***; Poly Grip; EPS ***PLUS*** bolt on	without track pads	W1	20 pcs.	131296
			EPS ***PLUS***	pre-assembled with EPS ***PLUS*** track pads	W1	20 pcs.	2121472
			Poly Grip	pre-assembled with Poly Grip track pads	W1	20 pcs.	131303
W 100 CFi	1810	1 - 9999	EPS ***PLUS***; Poly Grip; EPS ***PLUS*** bolt on	without track pads	W1	20 pcs.	131296
			EPS ***PLUS***	pre-assembled with EPS ***PLUS*** track pads	W1	20 pcs.	2121472
			Poly Grip	pre-assembled with Poly Grip track pads	W1	20 pcs.	131303
W 100 XFi	1810	1 - 9999	Poly Grip	pre-assembled with Poly Grip track pads	W1	20 pcs.	131303
			EPS ***PLUS***	pre-assembled with EPS ***PLUS*** track pads	W1	20 pcs.	2121472

CRAWLER UNIT CHAINS

Series code	Serial code	Series range	Track pad system	Version	Crawler size	Pads per crawler unit	Part no.
W 100 XFi	1810	1 - 9999	EPS ***PLUS***; Poly Grip; EPS ***PLUS*** bolt on	without track pads	W1	20 pcs.	131296
W 1200 F	0710	1 - 9999	EPS ***PLUS***; Poly Grip; EPS ***PLUS*** bolt on	without track pads	W1	20 pcs.	131296
			EPS ***PLUS***	pre-assembled with EPS ***PLUS*** track pads	W1	20 pcs.	2121472
			Poly Grip	pre-assembled with Poly Grip track pads	W1	20 pcs.	131303
W 120 F	0810	1 - 9999	EPS ***PLUS***	pre-assembled with EPS ***PLUS*** track pads	W1	20 pcs.	2121472
			Poly Grip	pre-assembled with Poly Grip track pads	W1	20 pcs.	131303
			EPS ***PLUS***; Poly Grip; EPS ***PLUS*** bolt on	without track pads	W1	20 pcs.	131296
W 120 Fi	1310	1 - 9999	EPS ***PLUS***; Poly Grip; EPS ***PLUS*** bolt on	without track pads	W1	20 pcs.	131296
			EPS ***PLUS***	pre-assembled with EPS ***PLUS*** track pads	W1	20 pcs.	2121472
			Poly Grip	pre-assembled with Poly Grip track pads	W1	20 pcs.	131303
W 120 CF	1710	1 - 9999	EPS ***PLUS***; Poly Grip; EPS ***PLUS*** bolt on	without track pads	W1	20 pcs.	131296
			EPS ***PLUS***	pre-assembled with EPS ***PLUS*** track pads	W1	20 pcs.	2121472
			Poly Grip	pre-assembled with Poly Grip track pads	W1	20 pcs.	131303
W 120 CFi	1810	1 - 9999	EPS ***PLUS***; Poly Grip; EPS ***PLUS*** bolt on	without track pads	W1	20 pcs.	131296
			EPS ***PLUS***	pre-assembled with EPS ***PLUS*** track pads	W1	20 pcs.	2121472
			Poly Grip	pre-assembled with Poly Grip track pads	W1	20 pcs.	131303
W 120 XTi	1810	1 - 9999	Poly Grip	pre-assembled with Poly Grip track pads	W1	20 pcs.	131303
			EPS ***PLUS***	pre-assembled with EPS ***PLUS*** track pads	W1	20 pcs.	2121472
			EPS ***PLUS***; Poly Grip; EPS ***PLUS*** bolt on	without track pads	W1	20 pcs.	131296
W 120 XFi	1810	1 - 9999	EPS ***PLUS***	pre-assembled with EPS ***PLUS*** track pads	W1	20 pcs.	2121472
			Poly Grip	pre-assembled with Poly Grip track pads	W1	20 pcs.	131303
			EPS ***PLUS***; Poly Grip; EPS ***PLUS*** bolt on	without track pads	W1	20 pcs.	131296
W 120 Fi	2710	1 - 9999	EPS ***PLUS***	pre-assembled with EPS ***PLUS*** track pads	W1	20 pcs.	2121472
			EPS ***PLUS***; Poly Grip; EPS ***PLUS*** bolt on	without track pads	W1	20 pcs.	131296
			Poly Grip	pre-assembled with Poly Grip track pads	W1	20 pcs.	131303
W 120 FTi	2710	1 - 9999	EPS ***PLUS***; Poly Grip; EPS ***PLUS*** bolt on	without track pads	W1	20 pcs.	131296

UNDERCARRIAGE CRAWLER DRIVE

CRAWLER UNIT CHAINS

Series code	Serial code	Series range	Track pad system	Version	Crawler size	Pads per crawler unit	Part no.
W 120 FTi	2710	1 - 9999	Poly Grip	pre-assembled with Poly Grip track pads	W1	20 pcs.	131303
			EPS ***PLUS***	pre-assembled with EPS ***PLUS*** track pads	W1	20 pcs.	2121472
W 1300 F	0710	1 - 9999	EPS ***PLUS***; Poly Grip; EPS ***PLUS*** bolt on	without track pads	W1	20 pcs.	131296
			EPS ***PLUS***	pre-assembled with EPS ***PLUS*** track pads	W1	20 pcs.	2121472
			Poly Grip	pre-assembled with Poly Grip track pads	W1	20 pcs.	131303
W 130 F	0810	1 - 9999	EPS ***PLUS***; Poly Grip; EPS ***PLUS*** bolt on	without track pads	W1	20 pcs.	131296
			EPS ***PLUS***	pre-assembled with EPS ***PLUS*** track pads	W1	20 pcs.	2121472
			Poly Grip	pre-assembled with Poly Grip track pads	W1	20 pcs.	131303
W 130 Fi	1310	1 - 9999	EPS ***PLUS***; Poly Grip; EPS ***PLUS*** bolt on	without track pads	W1	20 pcs.	131296
			EPS ***PLUS***	pre-assembled with EPS ***PLUS*** track pads	W1	20 pcs.	2121472
			Poly Grip	pre-assembled with Poly Grip track pads	W1	20 pcs.	131303
W 130 CF	1710	1 - 9999	EPS ***PLUS***; Poly Grip; EPS ***PLUS*** bolt on	without track pads	W1	20 pcs.	131296
			EPS ***PLUS***	pre-assembled with EPS ***PLUS*** track pads	W1	20 pcs.	2121472
			Poly Grip	pre-assembled with Poly Grip track pads	W1	20 pcs.	131303
W 130 CFi	1810	1 - 9999	EPS ***PLUS***; Poly Grip; EPS ***PLUS*** bolt on	without track pads	W1	20 pcs.	131296
			EPS ***PLUS***	pre-assembled with EPS ***PLUS*** track pads	W1	20 pcs.	2121472
			Poly Grip	pre-assembled with Poly Grip track pads	W1	20 pcs.	131303
W 130 XFi	1810	1 - 9999	EPS ***PLUS***; Poly Grip; EPS ***PLUS*** bolt on	without track pads	W1	20 pcs.	131296
			Poly Grip	pre-assembled with Poly Grip track pads	W1	20 pcs.	131303
			EPS ***PLUS***	pre-assembled with EPS ***PLUS*** track pads	W1	20 pcs.	2121472
W 130 Fi	2710	1 - 9999	EPS ***PLUS***	pre-assembled with EPS ***PLUS*** track pads	W1	20 pcs.	2121472
			Poly Grip	pre-assembled with Poly Grip track pads	W1	20 pcs.	131303
			EPS ***PLUS***; Poly Grip; EPS ***PLUS*** bolt on	without track pads	W1	20 pcs.	131296
W 1500	0820	1 - 9999	EPS ***PLUS***; Poly Grip; EPS ***PLUS*** bolt on	without track pads	W1	24 pcs.	108750
			EPS ***PLUS***	pre-assembled with EPS ***PLUS*** track pads	W1	24 pcs.	2136667
			Poly Grip	pre-assembled with Poly Grip track pads	W1	24 pcs.	108756

CRAWLER UNIT CHAINS

Series code	Serial code	Series range	Track pad system	Version	Crawler size	Pads per crawler unit	Part no.
W 150	0513	1 - 9999	EPS ***PLUS***; Poly Grip; EPS ***PLUS*** bolt on	without track pads	W1	20 pcs.	131296
			EPS ***PLUS***	pre-assembled with EPS ***PLUS*** track pads	W1	20 pcs.	2121472
			Poly Grip	pre-assembled with Poly Grip track pads	W1	20 pcs.	131303
W 150i	0613	1 - 9999	EPS ***PLUS***; Poly Grip; EPS ***PLUS*** bolt on	without track pads	W1	20 pcs.	131296
			EPS ***PLUS***	pre-assembled with EPS ***PLUS*** track pads	W1	20 pcs.	2121472
			Poly Grip	pre-assembled with Poly Grip track pads	W1	20 pcs.	131303
W 150 CF	0713	1 - 9999	EPS ***PLUS***; Poly Grip; EPS ***PLUS*** bolt on	without track pads	W1	20 pcs.	131296
			EPS ***PLUS***	pre-assembled with EPS ***PLUS*** track pads	W1	20 pcs.	2121472
			Poly Grip	pre-assembled with Poly Grip track pads	W1	20 pcs.	131303
W 150 CFi	0813	1 - 9999	EPS ***PLUS***; Poly Grip; EPS ***PLUS*** bolt on	without track pads	W1	20 pcs.	131296
			EPS ***PLUS***	pre-assembled with EPS ***PLUS*** track pads	W1	20 pcs.	2121472
			Poly Grip	pre-assembled with Poly Grip track pads	W1	20 pcs.	131303
W 150 XFi	0813	1 - 9999	EPS ***PLUS***	pre-assembled with EPS ***PLUS*** track pads	W1	20 pcs.	2121472
			EPS ***PLUS***; Poly Grip; EPS ***PLUS*** bolt on	without track pads	W1	20 pcs.	131296
			Poly Grip	pre-assembled with Poly Grip track pads	W1	20 pcs.	131303
W 1900	0820, 0920, 1020	1 - 9999	EPS ***PLUS***; Poly Grip; EPS ***PLUS*** bolt on	without track pads	W1	24 pcs.	108750
			EPS ***PLUS***	pre-assembled with EPS ***PLUS*** track pads	W1	24 pcs.	2136667
			Poly Grip	pre-assembled with Poly Grip track pads	W1	24 pcs.	108756
W 195	1820	1 - 9999	EPS ***PLUS***; Poly Grip; EPS ***PLUS*** bolt on	without track pads	W1	24 pcs.	108750
			EPS ***PLUS***	pre-assembled with EPS ***PLUS*** track pads	W1	24 pcs.	2136667
			Poly Grip	pre-assembled with Poly Grip track pads	W1	24 pcs.	108756
W 2000	0620, 1120	1 - 9999	Poly Grip	pre-assembled with Poly Grip track pads	W3	23 pcs.	121235
			EPS ***PLUS***	pre-assembled with EPS ***PLUS*** track pads	W3	23 pcs.	2136665
			EPS ***PLUS***; Poly Grip	without track pads	W3	23 pcs.	121236
W 200	1220	1 - 9999	EPS ***PLUS***; Poly Grip; EPS ***PLUS*** bolt on	without track pads	W1	24 pcs.	108750
			EPS ***PLUS***	pre-assembled with EPS ***PLUS*** track pads	W1	24 pcs.	2136667

UNDERCARRIAGE CRAWLER DRIVE

CRAWLER UNIT CHAINS

Series code	Serial code	Series range	Track pad system	Version	Crawler size	Pads per crawler unit	Part no.
W 200	1220	1 - 9999	Poly Grip	pre-assembled with Poly Grip track pads	W1	24 pcs.	108756
W 200i	1420	1 - 9999	EPS ***PLUS***	pre-assembled with EPS ***PLUS*** track pads	W1	24 pcs.	2136667
			Poly Grip	pre-assembled with Poly Grip track pads	W1	24 pcs.	108756
			EPS ***PLUS***; Poly Grip; EPS ***PLUS*** bolt on	without track pads	W1	24 pcs.	108750
W 200 F	2020	1 - 9999	EPS ***PLUS***	pre-assembled with EPS ***PLUS*** track pads	W1	23 pcs.	2703118
			EPS ***PLUS***; Poly Grip; EPS ***PLUS*** bolt on	without track pads	W1	23 pcs.	2703072
W 200 Fi	2120	1 - 9999	EPS ***PLUS***	pre-assembled with EPS ***PLUS*** track pads	W1	23 pcs.	2703118
			EPS ***PLUS***; Poly Grip; EPS ***PLUS*** bolt on	without track pads	W1	23 pcs.	2703072
W 200 H	1620	1 - 9999	EPS ***PLUS***; Poly Grip; EPS ***PLUS*** bolt on	without track pads	W1	24 pcs.	108750
			EPS ***PLUS***	pre-assembled with EPS ***PLUS*** track pads	W1	24 pcs.	2136667
			Poly Grip	pre-assembled with Poly Grip track pads	W1	24 pcs.	108756
W 200 Hi	1720	1 - 9999	EPS ***PLUS***; Poly Grip; EPS ***PLUS*** bolt on	without track pads	W1	24 pcs.	108750
			EPS ***PLUS***	pre-assembled with EPS ***PLUS*** track pads	W1	24 pcs.	2136667
			Poly Grip	pre-assembled with Poly Grip track pads	W1	24 pcs.	108756
W 205	2520	1 - 9999	Poly Grip	pre-assembled with Poly Grip track pads	W3	23 pcs.	121235
			EPS ***PLUS***	pre-assembled with EPS ***PLUS*** track pads	W3	23 pcs.	2136665
			EPS ***PLUS***; Poly Grip	without track pads	W3	23 pcs.	121236
W 207 Fi	2120	1 - 9999	Poly Grip	pre-assembled with Poly Grip track pads	W3	23 pcs.	121235
			EPS ***PLUS***	pre-assembled with EPS ***PLUS*** track pads	W3	23 pcs.	2136665
			EPS ***PLUS***; Poly Grip	without track pads	W3	23 pcs.	121236
W 2100	0921	1 - 147	Poly Grip	pre-assembled with Poly Grip track pads	W4	24 pcs.	41345
			EPS ***PLUS***; Poly Grip	without track pads	W4	24 pcs.	41344
		148 - 9999	EPS ***PLUS***; Poly Grip	without track pads	W4	24 pcs.	191688
			Poly Grip	pre-assembled with Poly Grip track pads	W4	24 pcs.	193228
			EPS ***PLUS***	pre-assembled with EPS ***PLUS*** track pads	W4	24 pcs.	2213105
W 210	1320	1 - 9999	EPS ***PLUS***; Poly Grip	without track pads	W3	23 pcs.	121236

CRAWLER UNIT CHAINS

Series code	Serial code	Series range	Track pad system	Version	Crawler size	Pads per crawler unit	Part no.
W 210	1320	1 - 9999	EPS ***PLUS***	pre-assembled with EPS ***PLUS*** track pads	W3	23 pcs.	2136665
			Poly Grip	pre-assembled with Poly Grip track pads	W3	23 pcs.	121235
W 210i	1520	1 - 9999	EPS ***PLUS***	pre-assembled with EPS ***PLUS*** track pads	W3	23 pcs.	2136665
			EPS ***PLUS***; Poly Grip	without track pads	W3	23 pcs.	121236
			Poly Grip	pre-assembled with Poly Grip track pads	W3	23 pcs.	121235
W 210 Fi	2320	1 - 9999	EPS ***PLUS***	pre-assembled with EPS ***PLUS*** track pads	W3	23 pcs.	2136665
			Poly Grip	pre-assembled with Poly Grip track pads	W3	23 pcs.	121235
			EPS ***PLUS***; Poly Grip	without track pads	W3	23 pcs.	121236
W 210 XP	2420	1 - 9999	EPS ***PLUS***	pre-assembled with EPS ***PLUS*** track pads	W3	23 pcs.	2136665
			Poly Grip	pre-assembled with Poly Grip track pads	W3	23 pcs.	121235
			EPS ***PLUS***; Poly Grip	without track pads	W3	23 pcs.	121236
W 215	1920	1 - 9999	Poly Grip	pre-assembled with Poly Grip track pads	W3	23 pcs.	121235
			EPS ***PLUS***; Poly Grip	without track pads	W3	23 pcs.	121236
			EPS ***PLUS***	pre-assembled with EPS ***PLUS*** track pads	W3	23 pcs.	2136665
W 2200	0821	1 - 9999	EPS ***PLUS***	pre-assembled with EPS ***PLUS*** track pads	W5	26 pcs.	2517143
			Poly Grip	pre-assembled with Poly Grip track pads	W5	26 pcs.	176321
			EPS ***PLUS***; Poly Grip	without track pads	W5	26 pcs.	176322
W 220	0522	1 - 9999	EPS ***PLUS***	pre-assembled with EPS ***PLUS*** track pads	W4	24 pcs.	2213105
			EPS ***PLUS***; Poly Grip	without track pads	W4	24 pcs.	191688
			Poly Grip	pre-assembled with Poly Grip track pads	W4	24 pcs.	193228
W 220i	0722	1 - 9999	EPS ***PLUS***; Poly Grip	without track pads	W4	24 pcs.	191688
			EPS ***PLUS***	pre-assembled with EPS ***PLUS*** track pads	W4	24 pcs.	2213105
			Poly Grip	pre-assembled with Poly Grip track pads	W4	24 pcs.	193228
W 220 Fi	1122	1 - 9999	EPS ***PLUS***; Poly Grip	without track pads	W4	24 pcs.	191688
			EPS ***PLUS***	pre-assembled with EPS ***PLUS*** track pads	W4	24 pcs.	2213105
W 250	0422	1 - 9999	Poly Grip	pre-assembled with Poly Grip track pads	W5	26 pcs.	176321

UNDERCARRIAGE CRAWLER DRIVE

CRAWLER UNIT CHAINS

Series code	Serial code	Series range	Track pad system	Version	Crawler size	Pads per crawler unit	Part no.
W 250	0422	1 - 9999	EPS ***PLUS***; Poly Grip	without track pads	W5	26 pcs.	176322
			EPS ***PLUS***	pre-assembled with EPS ***PLUS*** track pads	W5	26 pcs.	2517143
W 250i	0622	1 - 9999	EPS ***PLUS***	pre-assembled with EPS ***PLUS*** track pads	W5	26 pcs.	2517143
			EPS ***PLUS***; Poly Grip	without track pads	W5	26 pcs.	176322
			Poly Grip	pre-assembled with Poly Grip track pads	W5	26 pcs.	176321
W 250 Fi	1322	1 - 9999	EPS ***PLUS***	pre-assembled with EPS ***PLUS*** track pads	W5	26 pcs.	2517143
			EPS ***PLUS***; Poly Grip	without track pads	W5	26 pcs.	176322
2200 CR	0821	1 - 9999	EPS ***PLUS***	pre-assembled with EPS ***PLUS*** track pads	W5	26 pcs.	2517143
			Poly Grip	pre-assembled with Poly Grip track pads	W5	26 pcs.	176321
			EPS ***PLUS***; Poly Grip	without track pads	W5	26 pcs.	176322
W 240 CR	03CR	1 - 9999	Poly Grip	pre-assembled with Poly Grip track pads	W5	26 pcs.	176321
			EPS ***PLUS***	pre-assembled with EPS ***PLUS*** track pads	W5	26 pcs.	2517143
			EPS ***PLUS***; Poly Grip	without track pads	W5	26 pcs.	176322
W 240 CRi	04CR	1 - 9999	Poly Grip	pre-assembled with Poly Grip track pads	W5	26 pcs.	176321
			EPS ***PLUS***; Poly Grip	without track pads	W5	26 pcs.	176322
			EPS ***PLUS***	pre-assembled with EPS ***PLUS*** track pads	W5	26 pcs.	2517143
W 380 CR	03CR	1 - 9999	EPS ***PLUS***; Poly Grip	without track pads	W5	26 pcs.	176322
			Poly Grip	pre-assembled with Poly Grip track pads	W5	26 pcs.	176321
			EPS ***PLUS***	pre-assembled with EPS ***PLUS*** track pads	W5	26 pcs.	2517143
W 380 CRi	04CR	1 - 9999	EPS ***PLUS***	pre-assembled with EPS ***PLUS*** track pads	W5	26 pcs.	2517143
			EPS ***PLUS***; Poly Grip	without track pads	W5	26 pcs.	176322
			Poly Grip	pre-assembled with Poly Grip track pads	W5	26 pcs.	176321
SP 150	09SP	1 - 9999	Poly Grip	pre-assembled with Poly Grip track pads	W1	20 pcs.	131303
			EPS ***PLUS***; Poly Grip; EPS ***PLUS*** bolt on	without track pads	W1	20 pcs.	131296
			EPS ***PLUS***	pre-assembled with EPS ***PLUS*** track pads	W1	20 pcs.	2121472
SP 15	12SP	1 - 9999	EPS ***PLUS***	pre-assembled with EPS ***PLUS*** track pads	W1	20 pcs.	2121472

CRAWLER UNIT CHAINS

Series code	Serial code	Series range	Track pad system	Version	Crawler size	Pads per crawler unit	Part no.
SP 15	12SP	1 - 9999	Poly Grip	pre-assembled with Poly Grip track pads	W1	20 pcs.	131303
			EPS ***PLUS***; Poly Grip; EPS ***PLUS*** bolt on	without track pads	W1	20 pcs.	131296
SP 15i	14SP	1 - 9999	EPS ***PLUS***	pre-assembled with EPS ***PLUS*** track pads	W1	20 pcs.	2121472
			EPS ***PLUS***; Poly Grip; EPS ***PLUS*** bolt on	without track pads	W1	20 pcs.	131296
			Poly Grip	pre-assembled with Poly Grip track pads	W1	20 pcs.	131303
SP 250	08SP	1 - 9999	EPS ***PLUS***; Poly Grip	without track pads	W0	27 pcs.	120561
			Poly Grip	pre-assembled with Poly Grip track pads	W0	27 pcs.	120610
SP 25	13SP	1 - 9999	Poly Grip	pre-assembled with Poly Grip track pads	W0	27 pcs.	120610
			EPS ***PLUS***; Poly Grip	without track pads	W0	27 pcs.	120561
SP 25i	15SP	1 - 9999	Poly Grip	pre-assembled with Poly Grip track pads	W0	27 pcs.	120610
			EPS ***PLUS***; Poly Grip	without track pads	W0	27 pcs.	120561
SP 500	10SP	1 - 9999	Poly Grip	pre-assembled with Poly Grip track pads	W0	27 pcs.	120610
			EPS ***PLUS***; Poly Grip	without track pads	W0	27 pcs.	120561
2200 SM	0821	740 - 9999	EPS ***PLUS***; Poly Grip	without track pads	W5	24 pcs.	2416649
			Poly Grip	pre-assembled with Poly Grip track pads	W5	24 pcs.	2531040

Original WIRTGEN

UNDERCARRIAGE CRAWLER DRIVE

CHAIN RUNNER

Chain runner from WIRTGEN increase the service life of the crawler unit chains by preventing the link chains from coming into contact with the crawler unit frame.

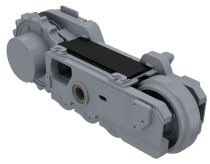

CHAIN RUNNER					
Series code	Serial code	Series range	Track pad system	Crawler size	Part no.
W 100 Fi	2710	1 - 9999	EPS ***PLUS***; Poly Grip; EPS ***PLUS*** bolt on	W1	2056527
W 1000 F	0710	1 - 9999	EPS ***PLUS***; Poly Grip; EPS ***PLUS*** bolt on	W1	2056527
W 100 F	0810	1 - 9999	EPS ***PLUS***; Poly Grip; EPS ***PLUS*** bolt on	W1	2056527
W 100 Fi	1310	1 - 9999	EPS ***PLUS***; Poly Grip; EPS ***PLUS*** bolt on	W1	2056527
W 100 CF	1710	1 - 9999	EPS ***PLUS***; Poly Grip; EPS ***PLUS*** bolt on	W1	2056527
W 100 CFi	1810	1 - 9999	EPS ***PLUS***; Poly Grip; EPS ***PLUS*** bolt on	W1	2056527
W 100 XFi	1810	1 - 9999	EPS ***PLUS***; Poly Grip; EPS ***PLUS*** bolt on	W1	2056527
W 1200 F	0710	1 - 9999	EPS ***PLUS***; Poly Grip; EPS ***PLUS*** bolt on	W1	2056527
W 120 F	0810	1 - 9999	EPS ***PLUS***; Poly Grip; EPS ***PLUS*** bolt on	W1	2056527
W 120 Fi	1310	1 - 9999	EPS ***PLUS***; Poly Grip; EPS ***PLUS*** bolt on	W1	2056527
W 120 CF	1710	1 - 9999	EPS ***PLUS***; Poly Grip; EPS ***PLUS*** bolt on	W1	2056527
W 120 CFi	1810	1 - 9999	EPS ***PLUS***; Poly Grip; EPS ***PLUS*** bolt on	W1	2056527
W 120 XTi	1810	1 - 9999	EPS ***PLUS***; Poly Grip; EPS ***PLUS*** bolt on	W1	2056527
W 120 XFi	1810	1 - 9999	EPS ***PLUS***; Poly Grip; EPS ***PLUS*** bolt on	W1	2056527
W 120 Fi	2710	1 - 9999	EPS ***PLUS***; Poly Grip; EPS ***PLUS*** bolt on	W1	2056527
W 120 FTi	2710	1 - 9999	EPS ***PLUS***; Poly Grip; EPS ***PLUS*** bolt on	W1	2056527
W 1300 F	0710	1 - 9999	EPS ***PLUS***; Poly Grip; EPS ***PLUS*** bolt on	W1	2056527
W 130 F	0810	1 - 9999	EPS ***PLUS***; Poly Grip; EPS ***PLUS*** bolt on	W1	2056527
W 130 Fi	1310	1 - 9999	EPS ***PLUS***; Poly Grip; EPS ***PLUS*** bolt on	W1	2056527
W 130 CF	1710	1 - 9999	EPS ***PLUS***; Poly Grip; EPS ***PLUS*** bolt on	W1	2056527

CHAIN RUNNER

Series code	Serial code	Series range	Track pad system	Crawler size	Part no.
W 130 CFi	1810	1 - 9999	EPS ***PLUS***; Poly Grip; EPS ***PLUS*** bolt on	W1	2056527
W 130 XFi	1810	1 - 9999	EPS ***PLUS***; Poly Grip; EPS ***PLUS*** bolt on	W1	2056527
W 130 Fi	2710	1 - 9999	EPS ***PLUS***; Poly Grip; EPS ***PLUS*** bolt on	W1	2056527
W 150	0513	1 - 9999	EPS ***PLUS***; Poly Grip; EPS ***PLUS*** bolt on	W1	2056527
W 150i	0613	1 - 9999	EPS ***PLUS***; Poly Grip; EPS ***PLUS*** bolt on	W1	2056527
W 150 CF	0713	1 - 9999	EPS ***PLUS***; Poly Grip; EPS ***PLUS*** bolt on	W1	2056527
W 150 CFi	0813	1 - 9999	EPS ***PLUS***; Poly Grip; EPS ***PLUS*** bolt on	W1	2056527
W 150 XFi	0813	1 - 9999	EPS ***PLUS***; Poly Grip; EPS ***PLUS*** bolt on	W1	2056527
W 195	1820	1 - 9999	EPS ***PLUS***; Poly Grip; EPS ***PLUS*** bolt on	W1	2139779
W 2000	0620	1 - 9999	EPS ***PLUS***; Poly Grip	W2	138451
	1120	88 - 9999	EPS ***PLUS***; Poly Grip	W3	138451
W 200	1220	1 - 9999	EPS ***PLUS***; Poly Grip; EPS ***PLUS*** bolt on	W1	2139779
W 200i	1420	1 - 9999	EPS ***PLUS***; Poly Grip; EPS ***PLUS*** bolt on	W1	2139779
W 200 F	2020	1 - 9999	EPS ***PLUS***; Poly Grip; EPS ***PLUS*** bolt on	W1	2139779
W 200 Fi	2120	1 - 9999	EPS ***PLUS***; Poly Grip; EPS ***PLUS*** bolt on	W1	2139779
W 200 H	1620	1 - 9999	EPS ***PLUS***; Poly Grip; EPS ***PLUS*** bolt on	W1	2139779
W 200 Hi	1720	1 - 9999	EPS ***PLUS***; Poly Grip; EPS ***PLUS*** bolt on	W1	2139779
W 205	2520	1 - 9999	EPS ***PLUS***; Poly Grip; EPS ***PLUS*** bolt on	W2	2139779
W 207 Fi	2120	1 - 9999	EPS ***PLUS***; Poly Grip; EPS ***PLUS*** bolt on	W2	2139779
W 2100	0921	1 - 9999	EPS ***PLUS***; Poly Grip	W3	138451
W 210	1320	1 - 9999	EPS ***PLUS***; Poly Grip; EPS ***PLUS*** bolt on	W2	2139779
W 210i	1520	1 - 9999	EPS ***PLUS***; Poly Grip; EPS ***PLUS*** bolt on	W2	2139779
W 210 Fi	2320	1 - 9999	EPS ***PLUS***; Poly Grip; EPS ***PLUS*** bolt on	W2	2139779
W 210 XP	2420	1 - 9999	EPS ***PLUS***; Poly Grip; EPS ***PLUS*** bolt on	W2	2139779
W 215	1920	1 - 9999	EPS ***PLUS***; Poly Grip; EPS ***PLUS*** bolt on	W2	2139779
W 2200	0821	1 - 9999	EPS ***PLUS***; Poly Grip	W5	133018

Original WIRTGEN

UNDERCARRIAGE CRAWLER DRIVE

CHAIN RUNNER					
Series code	Serial code	Series range	Track pad system	Crawler size	Part no.
W 220	0522	1 - 9999	EPS ***PLUS***; Poly Grip	W4	2212009
W 220i	0722	1 - 9999	EPS ***PLUS***; Poly Grip	W3	2212009
W 220 Fi	1122	1 - 9999	EPS ***PLUS***; Poly Grip	W4	2212009
W 250	0422	3 - 9999	EPS ***PLUS***; Poly Grip	W5	2212009
W 250i	0622	1 - 9999	EPS ***PLUS***; Poly Grip	W5	2212009
W 250 Fi	1322	1 - 9999	EPS ***PLUS***; Poly Grip	W5	2212009
2200 CR	0821	1 - 9999	EPS ***PLUS***; Poly Grip	W5	133018
W 240 CR	03CR	1 - 9999	EPS ***PLUS***; Poly Grip	W5	2212009
W 240 CRi	04CR	1 - 9999	EPS ***PLUS***; Poly Grip	W5	2212009
W 380 CR	03CR	1 - 9999	EPS ***PLUS***; Poly Grip	W5	2212009
W 380 CRi	04CR	1 - 9999	EPS ***PLUS***; Poly Grip	W5	2212009
SP 150	09SP	1 - 9999	EPS ***PLUS***; Poly Grip; EPS ***PLUS*** bolt on	W1	2056527
SP 15	12SP	1 - 9999	EPS ***PLUS***; Poly Grip; EPS ***PLUS*** bolt on	W1	2056527
SP 15i	14SP	1 - 9999	EPS ***PLUS***; Poly Grip; EPS ***PLUS*** bolt on	W1	2056527
2200 SM	0821	740 - 9999	EPS ***PLUS***; Poly Grip	W5	133018

TRACK ROLLERS

Genuine track rollers from WIRTGEN safely support the weight of the machine and thus ensure that the machine tracks with extreme precision, even at high advance rates and large milling depths.

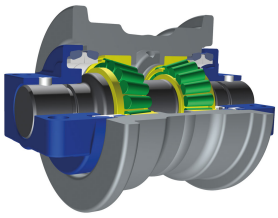

TRACK ROLLERS							
Series code	Serial code	Series range	Track pad system	Version	Crawler size	Require-ment	Part no.
W 100 Fi	2710	1 - 9999	EPS ***PLUS***; Poly Grip; EPS ***PLUS*** bolt on	roller bearings	W1	3 pc.	191936
W 1000 F	0710	8 - 9999	EPS ***PLUS***; Poly Grip; EPS ***PLUS*** bolt on	roller bearings	W1	3 pc.; 3 pc.	193999
W 100 F	0810	1 - 9999	EPS ***PLUS***; Poly Grip; EPS ***PLUS*** bolt on	roller bearings	W1	3 pc.; 3 pc.	191936
W 100 Fi	1310	1 - 9999	EPS ***PLUS***; Poly Grip; EPS ***PLUS*** bolt on	roller bearings	W1	3 pc.; 3 pc.	191936
W 100 CF	1710	1 - 9999	EPS ***PLUS***; Poly Grip; EPS ***PLUS*** bolt on	roller bearings	W1	3 pc.; 3 pc.	191936
W 100 CFi	1810	1 - 9999	EPS ***PLUS***; Poly Grip; EPS ***PLUS*** bolt on	roller bearings	W1	3 pc.; 3 pc.	191936
W 100 XFi	1810	1 - 9999	EPS ***PLUS***; Poly Grip; EPS ***PLUS*** bolt on	roller bearings	W1	3 pc.	191936
W 1200 F	0710	8 - 9999	EPS ***PLUS***; Poly Grip; EPS ***PLUS*** bolt on	roller bearings	W1	3 pc.; 3 pc.	193999
W 120 F	0810	1 - 9999	EPS ***PLUS***; Poly Grip; EPS ***PLUS*** bolt on	roller bearings	W1	3 pc.; 3 pc.	191936
W 120 Fi	1310	1 - 9999	EPS ***PLUS***; Poly Grip; EPS ***PLUS*** bolt on	roller bearings	W1	3 pc.; 3 pc.	191936
W 120 CF	1710	1 - 9999	EPS ***PLUS***; Poly Grip; EPS ***PLUS*** bolt on	roller bearings	W1	3 pc.; 3 pc.	191936
W 120 CFi	1810	1 - 9999	EPS ***PLUS***; Poly Grip; EPS ***PLUS*** bolt on	roller bearings	W1	3 pc.; 3 pc.	191936
W 120 XTi	1810	1 - 9999	EPS ***PLUS***; Poly Grip; EPS ***PLUS*** bolt on	roller bearings	W1	3 pc.	191936
W 120 XFi	1810	1 - 9999	EPS ***PLUS***; Poly Grip; EPS ***PLUS*** bolt on	roller bearings	W1	3 pc.	191936
W 120 Fi	2710	1 - 9999	EPS ***PLUS***; Poly Grip; EPS ***PLUS*** bolt on	roller bearings	W1	3 pc.	191936
W 120 FTi	2710	1 - 9999	EPS ***PLUS***; Poly Grip; EPS ***PLUS*** bolt on	roller bearings	W1	3 pc.	191936
W 1300 F	0710	8 - 9999	EPS ***PLUS***; Poly Grip; EPS ***PLUS*** bolt on	roller bearings	W1	3 pc.; 3 pc.	193999
W 130 F	0810	1 - 9999	EPS ***PLUS***; Poly Grip; EPS ***PLUS*** bolt on	roller bearings	W1	3 pc.; 3 pc.	191936
W 130 Fi	1310	1 - 9999	EPS ***PLUS***; Poly Grip; EPS ***PLUS*** bolt on	roller bearings	W1	3 pc.; 3 pc.	191936
W 130 CF	1710	1 - 9999	EPS ***PLUS***; Poly Grip; EPS ***PLUS*** bolt on	roller bearings	W1	3 pc.; 3 pc.	191936

UNDERCARRIAGE CRAWLER DRIVE

TRACK ROLLERS

Series code	Serial code	Series range	Track pad system	Version	Crawler size	Require-ment	Part no.
W 130 CFi	1810	1 - 9999	EPS ***PLUS***; Poly Grip; EPS ***PLUS*** bolt on	roller bearings	W1	3 pc.; 3 pc.	191936
W 130 XFi	1810	1 - 9999	EPS ***PLUS***; Poly Grip; EPS ***PLUS*** bolt on	roller bearings	W1	3 pc.	191936
W 130 Fi	2710	1 - 9999	EPS ***PLUS***; Poly Grip; EPS ***PLUS*** bolt on	roller bearings	W1	3 pc.	191936
W 1500	0820	1 - 9999	EPS ***PLUS***; Poly Grip; EPS ***PLUS*** bolt on	roller bearings	W1	4 pc.; 4 pc.	193999
W 150	0513	1 - 9999	EPS ***PLUS***; Poly Grip; EPS ***PLUS*** bolt on	roller bearings	W1	3 pc.; 3 pc.	191936
W 150i	0613	1 - 9999	EPS ***PLUS***; Poly Grip; EPS ***PLUS*** bolt on	roller bearings	W1	3 pc.; 3 pc.	191936
W 150 CF	0713	1 - 9999	EPS ***PLUS***; Poly Grip; EPS ***PLUS*** bolt on	roller bearings	W1	3 pc.; 3 pc.	191936
W 150 CFi	0813	1 - 9999	EPS ***PLUS***; Poly Grip; EPS ***PLUS*** bolt on	roller bearings	W1	3 pc.; 3 pc.	191936
W 150 XFi	0813	1 - 9999	EPS ***PLUS***; Poly Grip; EPS ***PLUS*** bolt on	roller bearings	W1	3 pc.	191936
W 1900	0820, 0920, 1020	1 - 9999	EPS ***PLUS***; Poly Grip; EPS ***PLUS*** bolt on	roller bearings	W1	4 pc.; 4 pc.	193999
W 195	1820	1 - 9999	EPS ***PLUS***; Poly Grip; EPS ***PLUS*** bolt on	roller bearings	W1	4 pc.; 4 pc.	191936
W 2000	0620, 1120	1 - 9999	EPS ***PLUS***; Poly Grip	roller bearings	W3	4 pc.; 4 pc.	2066123
W 200	1220	1 - 9999	EPS ***PLUS***; Poly Grip; EPS ***PLUS*** bolt on	roller bearings	W1	4 pc.; 4 pc.	191936
W 200i	1420	1 - 9999	EPS ***PLUS***; Poly Grip; EPS ***PLUS*** bolt on	roller bearings	W1	4 pc.; 4 pc.	191936
W 200 F	2020	1 - 9999	EPS ***PLUS***; Poly Grip; EPS ***PLUS*** bolt on	roller bearings	W1	4 pc.; 4 pc.	191936
W 200 Fi	2120	1 - 9999	EPS ***PLUS***; Poly Grip; EPS ***PLUS*** bolt on	roller bearings	W1	4 pc.; 4 pc.	191936
W 200 H	1620	1 - 9999	EPS ***PLUS***; Poly Grip; EPS ***PLUS*** bolt on	roller bearings	W1	4 pc.; 4 pc.	191936
W 200 Hi	1720	1 - 9999	EPS ***PLUS***; Poly Grip; EPS ***PLUS*** bolt on	roller bearings	W1	4 pc.; 4 pc.	191936
W 205	2520	1 - 9999	EPS ***PLUS***; Poly Grip	roller bearings	W3	4 pc.; 4 pc.	2111494
W 207 Fi	2120	1 - 9999	EPS ***PLUS***; Poly Grip	roller bearings	W3	4 pc.; 4 pc.	2111494
W 2100	0921	1 - 9999	EPS ***PLUS***; Poly Grip	roller bearings	W4	4 pc.; 4 pc.	2070670
W 210	1320	1 - 9999	EPS ***PLUS***; Poly Grip	roller bearings	W3	4 pc.; 4 pc.	2111494
W 210i	1520	1 - 9999	EPS ***PLUS***; Poly Grip	roller bearings	W3	4 pc.; 4 pc.	2111494
W 210 Fi	2320	1 - 9999	EPS ***PLUS***; Poly Grip	roller bearings	W3	4 pc.; 4 pc.	2111494
W 210 XP	2420	1 - 9999	EPS ***PLUS***; Poly Grip	roller bearings	W3	4 pc.; 4 pc.	2111494
W 215	1920	1 - 9999	EPS ***PLUS***; Poly Grip	roller bearings	W3	4 pc.; 4 pc.	2111494

TRACK ROLLERS

Series code	Serial code	Series range	Track pad system	Version	Crawler size	Require-ment	Part no.
W 2200	0821	1 - 311	EPS ***PLUS***; Poly Grip	sliding bearings	W5	4 pc.; 4 pc.	118719
		312 - 9999	EPS ***PLUS***; Poly Grip	sliding bearings	W5	4 pc.; 4 pc.	2053169
W 220	0522	1 - 9999	EPS ***PLUS***; Poly Grip	roller bearings	W4	4 pc.; 4 pc.	2070670
W 220i	0722	1 - 9999	EPS ***PLUS***; Poly Grip	roller bearings	W4	4 pc.; 4 pc.	2070670
W 220 Fi	1122	1 - 9999	EPS ***PLUS***; Poly Grip	roller bearings	W4	4 pc.	2070670
W 250	0422	1 - 9999	EPS ***PLUS***; Poly Grip	roller bearings	W5	4 pc.; 4 pc.	2165046
W 250i	0622	1 - 9999	EPS ***PLUS***; Poly Grip	roller bearings	W5	4 pc.; 4 pc.	2165046
W 250 Fi	1322	1 - 9999	EPS ***PLUS***; Poly Grip	roller bearings	W5	4 pc.	2165046
2200 CR	0821	1 - 311	EPS ***PLUS***; Poly Grip	sliding bearings	W5	4 pc.; 4 pc.	118719
		312 - 9999	EPS ***PLUS***; Poly Grip	sliding bearings	W5	4 pc.; 4 pc.	2053169
W 240 CR	03CR	1 - 9999	EPS ***PLUS***; Poly Grip	roller bearings	W5	4 pc.; 4 pc.	2165046
W 240 CRi	04CR	1 - 9999	EPS ***PLUS***; Poly Grip	roller bearings	W5	4 pc.; 4 pc.	2165046
W 380 CR	03CR	1 - 9999	EPS ***PLUS***; Poly Grip	roller bearings	W5	4 pc.; 4 pc.	2165046
W 380 CRi	04CR	1 - 9999	EPS ***PLUS***; Poly Grip	roller bearings	W5	4 pc.; 4 pc.	2165046
SP 150	09SP	1 - 9999	EPS ***PLUS***; Poly Grip; EPS ***PLUS*** bolt on	roller bearings	W1	3 pc.; 3 pc.	191936
SP 15	12SP	1 - 9999	EPS ***PLUS***; Poly Grip; EPS ***PLUS*** bolt on	roller bearings	W1	3 pc.; 3 pc.	191936
SP 15i	14SP	1 - 9999	EPS ***PLUS***; Poly Grip; EPS ***PLUS*** bolt on	roller bearings	W1	3 pc.; 3 pc.	191936

Original WIRTGEN

UNDERCARRIAGE CRAWLER DRIVE

IDLERS

WIRTGEN's wear-resistant idlers are lubricated for life and ensure the machine tracks precisely.

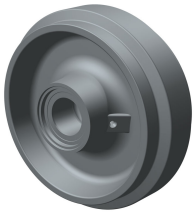

IDLERS							
Series code	Serial code	Series range	Part	Track pad system	Package in-cludes	Crawler size	Part no.
W 100 Fi	2710	1 - 9999	Idler assembly	EPS ***PLUS***; Poly Grip; EPS ***PLUS*** bolt on	incl. idler guide	W1	2227105
W 1000 F	0710	1 - 7	Idler assembly	EPS ***PLUS***; Poly Grip; EPS ***PLUS*** bolt on	incl. idler guide	W1	129988
		8 - 9999	Idler assembly	EPS ***PLUS***; Poly Grip; EPS ***PLUS*** bolt on	incl. idler guide	W1	131307
W 100 F	0810	1 - 1390	Idler unit	EPS ***PLUS***; Poly Grip; EPS ***PLUS*** bolt on	incl. idler guide	W1	87705
		1391 - 9999	Idler assembly	EPS ***PLUS***; Poly Grip; EPS ***PLUS*** bolt on	incl. idler guide	W1	2227105
W 100 Fi	1310	1 - 206	Idler unit	EPS ***PLUS***; Poly Grip; EPS ***PLUS*** bolt on	incl. idler guide	W1	87705
		207 - 9999	Idler assembly	EPS ***PLUS***; Poly Grip; EPS ***PLUS*** bolt on	incl. idler guide	W1	2227105
W 100 CF	1710	1 - 9999	Idler assembly	EPS ***PLUS***; Poly Grip; EPS ***PLUS*** bolt on	incl. idler guide	W1	2227105
W 100 CFi	1810	1 - 9999	Idler assembly	EPS ***PLUS***; Poly Grip; EPS ***PLUS*** bolt on	incl. idler guide	W1	2227105
W 100 XFi	1810	1 - 9999	Idler assembly	EPS ***PLUS***; Poly Grip; EPS ***PLUS*** bolt on	incl. idler guide	W1	2227105
W 1200 F	0710	1 - 7	Idler assembly	EPS ***PLUS***; Poly Grip; EPS ***PLUS*** bolt on	incl. idler guide	W1	129988
		8 - 9999	Idler assembly	EPS ***PLUS***; Poly Grip; EPS ***PLUS*** bolt on	incl. idler guide	W1	131307
W 120 F	0810	1 - 1390	Idler unit	EPS ***PLUS***; Poly Grip; EPS ***PLUS*** bolt on	incl. idler guide	W1	87705
		1391 - 9999	Idler assembly	EPS ***PLUS***; Poly Grip; EPS ***PLUS*** bolt on	incl. idler guide	W1	2227105
W 120 Fi	1310	1 - 206	Idler unit	EPS ***PLUS***; Poly Grip; EPS ***PLUS*** bolt on	incl. idler guide	W1	87705
		207 - 9999	Idler assembly	EPS ***PLUS***; Poly Grip; EPS ***PLUS*** bolt on	incl. idler guide	W1	2227105
W 120 CF	1710	1 - 9999	Idler assembly	EPS ***PLUS***; Poly Grip; EPS ***PLUS*** bolt on	incl. idler guide	W1	2227105
W 120 CFi	1810	1 - 9999	Idler assembly	EPS ***PLUS***; Poly Grip; EPS ***PLUS*** bolt on	incl. idler guide	W1	2227105
W 120 XTi	1810	1 - 9999	Idler assembly	EPS ***PLUS***; Poly Grip; EPS ***PLUS*** bolt on	incl. idler guide	W1	2227105
W 120 XFi	1810	1 - 9999	Idler assembly	EPS ***PLUS***; Poly Grip; EPS ***PLUS*** bolt on	incl. idler guide	W1	2227105

IDLERS

Series code	Serial code	Series range	Part	Track pad system	Package includes	Crawler size	Part no.
W 120 Fi	2710	1 - 9999	Idler assembly	EPS ***PLUS***; Poly Grip; EPS ***PLUS*** bolt on	incl. idler guide	W1	2227105
W 120 FTi	2710	1 - 9999	Idler assembly	EPS ***PLUS***; Poly Grip; EPS ***PLUS*** bolt on	incl. idler guide	W1	2227105
W 1300 F	0710	1 - 7	Idler assembly	EPS ***PLUS***; Poly Grip; EPS ***PLUS*** bolt on	incl. idler guide	W1	129988
		8 - 9999	Idler assembly	EPS ***PLUS***; Poly Grip; EPS ***PLUS*** bolt on	incl. idler guide	W1	131307
W 130 F	0810	1 - 1390	Idler unit	EPS ***PLUS***; Poly Grip; EPS ***PLUS*** bolt on	incl. idler guide	W1	87705
		1391 - 9999	Idler assembly	EPS ***PLUS***; Poly Grip; EPS ***PLUS*** bolt on	incl. idler guide	W1	2227105
W 130 Fi	1310	1 - 206	Idler unit	EPS ***PLUS***; Poly Grip; EPS ***PLUS*** bolt on	incl. idler guide	W1	87705
		207 - 9999	Idler assembly	EPS ***PLUS***; Poly Grip; EPS ***PLUS*** bolt on	incl. idler guide	W1	2227105
W 130 CF	1710	1 - 9999	Idler assembly	EPS ***PLUS***; Poly Grip; EPS ***PLUS*** bolt on	incl. idler guide	W1	2227105
W 130 CFi	1810	1 - 9999	Idler assembly	EPS ***PLUS***; Poly Grip; EPS ***PLUS*** bolt on	incl. idler guide	W1	2227105
W 130 XFi	1810	1 - 9999	Idler assembly	EPS ***PLUS***; Poly Grip; EPS ***PLUS*** bolt on	incl. idler guide	W1	2227105
W 130 Fi	2710	1 - 9999	Idler assembly	EPS ***PLUS***; Poly Grip; EPS ***PLUS*** bolt on	incl. idler guide	W1	2227105
W 150	0513	1 - 278	Idler unit	EPS ***PLUS***; Poly Grip; EPS ***PLUS*** bolt on	incl. idler guide	W1	87705
		279 - 9999	Idler assembly	EPS ***PLUS***; Poly Grip; EPS ***PLUS*** bolt on	incl. idler guide	W1	2227105
W 150i	0613	1 - 9999	Idler assembly	EPS ***PLUS***; Poly Grip; EPS ***PLUS*** bolt on	incl. idler guide	W1	2227105
W 150 CF	0713	1 - 9999	Idler assembly	EPS ***PLUS***; Poly Grip; EPS ***PLUS*** bolt on	incl. idler guide	W1	2227105
W 150 CFi	0813	1 - 9999	Idler assembly	EPS ***PLUS***; Poly Grip; EPS ***PLUS*** bolt on	incl. idler guide	W1	2227105
W 150 XFi	0813	1 - 9999	Idler assembly	EPS ***PLUS***; Poly Grip; EPS ***PLUS*** bolt on	incl. idler guide	W1	2227105
W 1900	0820	1 - 9999	Idler unit	EPS ***PLUS***; Poly Grip; EPS ***PLUS*** bolt on	complete, incl. rear tensioner unit	W1	106031
				EPS ***PLUS***; Poly Grip; EPS ***PLUS*** bolt on	complete, incl. front tensioner unit	W1	106030
W 195	1820	1 - 9999	Idler unit	EPS ***PLUS***; Poly Grip; EPS ***PLUS*** bolt on	incl. idler guide	W1	2139776
W 2000	0620	1 - 9999	Idler unit	EPS ***PLUS***; Poly Grip	complete, incl. tensioner unit	W2	121231
				EPS ***PLUS***; Poly Grip	incl. idler guide	W2	121232
	1120	88 - 9999	Idler unit	EPS ***PLUS***; Poly Grip	complete, incl. tensioner unit	W3	121231

UNDERCARRIAGE CRAWLER DRIVE

IDLERS							
Series code	Serial code	Series range	Part	Track pad system	Package in-cludes	Crawler size	Part no.
W 200	1220	1 - 9999	Idler unit	EPS ***PLUS***; Poly Grip; EPS ***PLUS*** bolt on	incl. idler guide	W1	2139776
W 200i	1420	1 - 9999	Idler unit	EPS ***PLUS***; Poly Grip; EPS ***PLUS*** bolt on	incl. idler guide	W1	2139776
W 200 F	2020	1 - 9999	Idler unit	EPS ***PLUS***; Poly Grip; EPS ***PLUS*** bolt on	incl. idler guide	W1	2139776
W 200 Fi	2120	1 - 9999	Idler unit	EPS ***PLUS***; Poly Grip; EPS ***PLUS*** bolt on	incl. idler guide	W1	2139776
W 200 H	1620	1 - 9999	Idler unit	EPS ***PLUS***; Poly Grip; EPS ***PLUS*** bolt on	incl. idler guide	W1	2139776
W 200 Hi	1720	1 - 9999	Idler unit	EPS ***PLUS***; Poly Grip; EPS ***PLUS*** bolt on	incl. idler guide	W1	2139776
W 205	2520	1 - 9999	Idler unit	EPS ***PLUS***; Poly Grip; EPS ***PLUS*** bolt on	incl. idler guide	W2	2139776
W 207 Fi	2120	1 - 9999	Idler unit	EPS ***PLUS***; Poly Grip; EPS ***PLUS*** bolt on	incl. idler guide	W2	2139776
W 2100	0921	1 - 147	Idler unit	EPS ***PLUS***; Poly Grip	incl. idler guide	W3	73749
		148 - 9999	Idler unit	EPS ***PLUS***; Poly Grip	incl. idler guide	W3	191689
W 210	1320	6 - 9999	Idler unit	EPS ***PLUS***; Poly Grip; EPS ***PLUS*** bolt on	incl. idler guide	W2	2139776
W 210i	1520	1 - 9999	Idler unit	EPS ***PLUS***; Poly Grip; EPS ***PLUS*** bolt on	incl. idler guide	W2	2139776
W 210 Fi	2320	1 - 9999	Idler unit	EPS ***PLUS***; Poly Grip; EPS ***PLUS*** bolt on	incl. idler guide	W2	2139776
W 210 XP	2420	1 - 9999	Idler unit	EPS ***PLUS***; Poly Grip; EPS ***PLUS*** bolt on	incl. idler guide	W2	2139776
W 215	1920	1 - 9999	Idler unit	EPS ***PLUS***; Poly Grip; EPS ***PLUS*** bolt on	incl. idler guide	W2	2139776
W 2200	0821	1 - 9999	Idler unit	EPS ***PLUS***; Poly Grip	incl. idler guide	W5	133014
W 220	0522	1 - 9999	Idler unit	EPS ***PLUS***; Poly Grip	incl. idler guide	W4	191689
W 220i	0722	1 - 9999	Idler unit	EPS ***PLUS***; Poly Grip	incl. idler guide	W3	191689
W 220 Fi	1122	1 - 9999	Idler unit	EPS ***PLUS***; Poly Grip	incl. idler guide	W4	191689
W 250	0422	3 - 9999	Idler unit	EPS ***PLUS***; Poly Grip	incl. idler guide	W5	133014
W 250i	0622	3 - 9999	Idler unit	EPS ***PLUS***; Poly Grip	incl. idler guide	W5	133014
W 250 Fi	1322	1 - 9999	Idler unit	EPS ***PLUS***; Poly Grip	incl. idler guide	W5	133014
2200 CR	0821	1 - 9999	Idler unit	EPS ***PLUS***; Poly Grip	incl. idler guide	W5	133014
W 240 CR	03CR	1 - 9999	Idler unit	EPS ***PLUS***; Poly Grip	incl. idler guide	W5	133014
W 240 CRi	04CR	1 - 9999	Idler unit	EPS ***PLUS***; Poly Grip	incl. idler guide	W5	133014
W 380 CR	03CR	1 - 9999	Idler unit	EPS ***PLUS***; Poly Grip	incl. idler guide	W5	133014

IDLERS							
Series code	Serial code	Series range	Part	Track pad system	Package includes	Crawler size	Part no.
W 380 CRi	04CR	1 - 9999	Idler unit	EPS ***PLUS***; Poly Grip	incl. idler guide	W5	133014
SP 150	09SP	1 - 9999	Idler unit	EPS ***PLUS***; Poly Grip; EPS ***PLUS*** bolt on	incl. idler guide	W1	87705
SP 15	12SP	1 - 9999	Idler unit	EPS ***PLUS***; Poly Grip; EPS ***PLUS*** bolt on	incl. idler guide	W1	87705
SP 15i	14SP	1 - 9999	Idler unit	EPS ***PLUS***; Poly Grip; EPS ***PLUS*** bolt on	incl. idler guide	W1	87705

TENSIONER UNITS

The tensioner unit always ensures that the crawler unit chain is optimally tensioned. Specially adapted to the respective requirement, either a spring-loaded grease tensioning cylinder or a hydraulic tensioning cylinder is used.

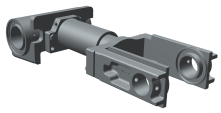

TENSIONER UNITS							
Series code	Serial code	Part	Track pad system	Version	Crawler size	Position	Part no.
W 100 Fi	2710	Complete tensioning unit	EPS ***PLUS***; Poly Grip; EPS ***PLUS*** bolt on	Hydraulic cylinder-system	W1		2474315
W 1000 F	0710	Complete tensioner unit	EPS ***PLUS***; Poly Grip; EPS ***PLUS*** bolt on	Hydraulic cylinder-system	W1		129987
W 100 F	0810	Complete tensioning unit	EPS ***PLUS***; Poly Grip; EPS ***PLUS*** bolt on	Hydraulic cylinder-system	W1		2474315
W 100 Fi	1310	Complete tensioning unit	EPS ***PLUS***; Poly Grip; EPS ***PLUS*** bolt on	Hydraulic cylinder-system	W1		2474315
W 100 CF	1710	Complete tensioning unit	EPS ***PLUS***; Poly Grip; EPS ***PLUS*** bolt on	Hydraulic cylinder-system	W1		2474315
W 100 CFi	1810	Complete tensioning unit	EPS ***PLUS***; Poly Grip; EPS ***PLUS*** bolt on	Hydraulic cylinder-system	W1		2474315

TENSIONER UNITS							
Series code	Serial code	Part	Track pad system	Version	Crawler size	Position	Part no.
W 100 XFi	1810	Complete tensioning unit	EPS ***PLUS***; Poly Grip; EPS ***PLUS*** bolt on	Hydraulic cylinder-system	W1		2474315
W 1200 F	0710	Complete tensioner unit	EPS ***PLUS***; Poly Grip; EPS ***PLUS*** bolt on	Hydraulic cylinder-system	W1		129987
W 120 F	0810	Complete tensioning unit	EPS ***PLUS***; Poly Grip; EPS ***PLUS*** bolt on	Hydraulic cylinder-system	W1		2474315
W 120 Fi	1310	Complete tensioning unit	EPS ***PLUS***; Poly Grip; EPS ***PLUS*** bolt on	Hydraulic cylinder-system	W1		2474315
W 120 CF	1710	Complete tensioning unit	EPS ***PLUS***; Poly Grip; EPS ***PLUS*** bolt on	Hydraulic cylinder-system	W1		2474315
W 120 CFi	1810	Complete tensioning unit	EPS ***PLUS***; Poly Grip; EPS ***PLUS*** bolt on	Hydraulic cylinder-system	W1		2474315
W 120 XTi	1810	Complete tensioning unit	EPS ***PLUS***; Poly Grip; EPS ***PLUS*** bolt on	Hydraulic cylinder-system	W1		2474315
W 120 XFi	1810	Complete tensioning unit	EPS ***PLUS***; Poly Grip; EPS ***PLUS*** bolt on	Hydraulic cylinder-system	W1		2474315
W 120 Fi	2710	Complete tensioning unit	EPS ***PLUS***; Poly Grip; EPS ***PLUS*** bolt on	Hydraulic cylinder-system	W1		2474315
W 120 FTi	2710	Complete tensioning unit	EPS ***PLUS***; Poly Grip; EPS ***PLUS*** bolt on	Hydraulic cylinder-system	W1		2474315
W 1300 F	0710	Complete tensioner unit	EPS ***PLUS***; Poly Grip; EPS ***PLUS*** bolt on	Hydraulic cylinder-system	W1		129987
W 130 F	0810	Complete tensioning unit	EPS ***PLUS***; Poly Grip; EPS ***PLUS*** bolt on	Hydraulic cylinder-system	W1		2474315
W 130 Fi	1310	Complete tensioning unit	EPS ***PLUS***; Poly Grip; EPS ***PLUS*** bolt on	Hydraulic cylinder-system	W1		2474315

TENSIONER UNITS

Series code	Serial code	Part	Track pad system	Version	Crawler size	Position	Part no.
W 130 CF	1710	Complete tensioning unit	EPS ***PLUS***; Poly Grip; EPS ***PLUS*** bolt on	Hydraulic cylinder-system	W1		2474315
W 130 CFi	1810	Complete tensioning unit	EPS ***PLUS***; Poly Grip; EPS ***PLUS*** bolt on	Hydraulic cylinder-system	W1		2474315
W 130 XFi	1810	Complete tensioning unit	EPS ***PLUS***; Poly Grip; EPS ***PLUS*** bolt on	Hydraulic cylinder-system	W1		2474315
W 130 Fi	2710	Complete tensioning unit	EPS ***PLUS***; Poly Grip; EPS ***PLUS*** bolt on	Hydraulic cylinder-system	W1		2474315
W 1500	0820	Complete tensioner unit	EPS ***PLUS***; Poly Grip; EPS ***PLUS*** bolt on	Spring/grease system	W1	front	106035
			EPS ***PLUS***; Poly Grip; EPS ***PLUS*** bolt on	Spring/grease system	W1	rear	106036
W 150	0513	Complete tensioning unit	EPS ***PLUS***; Poly Grip; EPS ***PLUS*** bolt on	Hydraulic cylinder-system	W1		2474315
W 150i	0613	Complete tensioning unit	EPS ***PLUS***; Poly Grip; EPS ***PLUS*** bolt on	Hydraulic cylinder-system	W1		2474315
W 150 CF	0713	Complete tensioning unit	EPS ***PLUS***; Poly Grip; EPS ***PLUS*** bolt on	Hydraulic cylinder-system	W1		2474315
W 150 CFi	0813	Complete tensioning unit	EPS ***PLUS***; Poly Grip; EPS ***PLUS*** bolt on	Hydraulic cylinder-system	W1		2474315
W 150 XFi	0813	Complete tensioning unit	EPS ***PLUS***; Poly Grip; EPS ***PLUS*** bolt on	Hydraulic cylinder-system	W1		2474315
W 1900	0820	Complete tensioner unit	EPS ***PLUS***; Poly Grip; EPS ***PLUS*** bolt on	Spring/grease system	W1	rear	106036
			EPS ***PLUS***; Poly Grip; EPS ***PLUS*** bolt on	Spring/grease system	W1	front	106035

UNDERCARRIAGE CRAWLER DRIVE

TENSIONER UNITS							
Series code	Serial code	Part	Track pad system	Version	Crawler size	Position	Part no.
W 1900	0920	Complete tensioner unit	EPS ***PLUS***; Poly Grip; EPS ***PLUS*** bolt on	Spring/grease system	W1	front	106035
			EPS ***PLUS***; Poly Grip; EPS ***PLUS*** bolt on	Spring/grease system	W1	rear	106036
	1020	Complete tensioner unit	EPS ***PLUS***; Poly Grip; EPS ***PLUS*** bolt on	Spring/grease system	W1	rear	106036
			EPS ***PLUS***; Poly Grip; EPS ***PLUS*** bolt on	Spring/grease system	W1	front	106035
W 195	1820	Complete tensioner unit	EPS ***PLUS***; Poly Grip; EPS ***PLUS*** bolt on	Spring/grease system	W1		2533501
W 2000	0620, 1120	Complete tensioner unit	EPS ***PLUS***; Poly Grip	Spring/grease system	W3		121233
W 200	1220	Complete tensioning unit	EPS ***PLUS***; Poly Grip; EPS ***PLUS*** bolt on	Hydraulic cylinder-system	W1		2474315
W 200i	1420	Complete tensioning unit	EPS ***PLUS***; Poly Grip; EPS ***PLUS*** bolt on	Hydraulic cylinder-system	W1		2474315
W 200 F	2020	Complete tensioning unit	EPS ***PLUS***; Poly Grip; EPS ***PLUS*** bolt on	Hydraulic cylinder-system	W1		2474315
W 200 Fi	2120	Complete tensioning unit	EPS ***PLUS***; Poly Grip; EPS ***PLUS*** bolt on	Hydraulic cylinder-system	W1		2474315
W 200 H	1620	Complete tensioning unit	EPS ***PLUS***; Poly Grip; EPS ***PLUS*** bolt on	Hydraulic cylinder-system	W1		2474315
W 200 Hi	1720	Complete tensioning unit	EPS ***PLUS***; Poly Grip; EPS ***PLUS*** bolt on	Hydraulic cylinder-system	W1		2474315
W 205	2520	Complete tensioner unit	EPS ***PLUS***; Poly Grip; EPS ***PLUS*** bolt on	Spring/grease system	W3		2533501

TENSIONER UNITS

Series code	Serial code	Part	Track pad system	Version	Crawler size	Position	Part no.
W 207 Fi	2120	Complete tensioning unit	EPS ***PLUS***; Poly Grip; EPS ***PLUS*** bolt on	Hydraulic cylinder-system	W3		2474315
W 2100	0921	Complete tensioner unit	EPS ***PLUS***; Poly Grip	Hydraulic cylinder-system	W4		133015
W 210	1320	Complete tensioning unit	EPS ***PLUS***; Poly Grip; EPS ***PLUS*** bolt on	Hydraulic cylinder-system	W3		2474315
W 210i	1520	Complete tensioning unit	EPS ***PLUS***; Poly Grip; EPS ***PLUS*** bolt on	Hydraulic cylinder-system	W3		2474315
W 210 Fi	2320	Complete tensioning unit	EPS ***PLUS***; Poly Grip; EPS ***PLUS*** bolt on	Hydraulic cylinder-system	W3		2474315
W 210 XP	2420	Complete tensioning unit	EPS ***PLUS***; Poly Grip; EPS ***PLUS*** bolt on	Hydraulic cylinder-system	W3		2474315
W 215	1920	Complete tensioner unit	EPS ***PLUS***; Poly Grip; EPS ***PLUS*** bolt on	Spring/grease system	W3		2533501
W 2200	0821	Complete tensioner unit	EPS ***PLUS***; Poly Grip	Hydraulic cylinder-system	W5		133015
W 220	0522	Complete tensioner unit	EPS ***PLUS***; Poly Grip	Hydraulic cylinder-system	W4		133015
W 220i	0722	Complete tensioner unit	EPS ***PLUS***; Poly Grip	Hydraulic cylinder-system	W4		133015
W 220 Fi	1122	Complete tensioner unit	EPS ***PLUS***; Poly Grip	Hydraulic cylinder-system	W4		133015
W 250	0422	Complete tensioner unit	EPS ***PLUS***; Poly Grip	Hydraulic cylinder-system	W5		133015
W 250i	0622	Complete tensioner unit	EPS ***PLUS***; Poly Grip	Hydraulic cylinder-system	W5		133015
W 250 Fi	1322	Complete tensioner unit	EPS ***PLUS***; Poly Grip	Hydraulic cylinder-system	W5		133015
2200 CR	0821	Complete tensioner unit	EPS ***PLUS***; Poly Grip	Hydraulic cylinder-system	W5		133015
W 240 CR	03CR	Complete tensioner unit	EPS ***PLUS***; Poly Grip	Hydraulic cylinder-system	W5		133015
W 240 CRi	04CR	Complete tensioner unit	EPS ***PLUS***; Poly Grip	Hydraulic cylinder-system	W5		133015
W 380 CR	03CR	Complete tensioner unit	EPS ***PLUS***; Poly Grip	Hydraulic cylinder-system	W5		133015
W 380 CRi	04CR	Complete tensioner unit	EPS ***PLUS***; Poly Grip	Hydraulic cylinder-system	W5		133015

TENSIONER UNITS							
Series code	Serial code	Part	Track pad system	Version	Crawler size	Position	Part no.
SP 150	09SP	Complete tensioning unit	EPS ***PLUS***; Poly Grip; EPS ***PLUS*** bolt on	Hydraulic cylinder-system	W1		2474315
SP 15	12SP	Complete tensioning unit	EPS ***PLUS***; Poly Grip; EPS ***PLUS*** bolt on	Hydraulic cylinder-system	W1		2474315
SP 15i	14SP	Complete tensioning unit	EPS ***PLUS***; Poly Grip; EPS ***PLUS*** bolt on	Hydraulic cylinder-system	W1		2474315

SERVICE PACKAGES FOR TRACK PADS

The service packages for track pads are our comprehensive, full-service packages for you. In order to achieve optimal wear characteristics, all track pads of a crawler unit should be exchanged at the same time. The packages contain all you need for wear-optimised, fast and uncomplicated changing of your track pads. Wirtgen track pad service packages ensure that you always get the very best from your machines.

SERVICE PACKAGES FOR TRACK PADS							
Series code	Serial code	Track pad system	Package type	Packaging unit	Crawler size	Track pads per crawler unit	Part no.
W 100 Fi	2710	EPS ***PLUS***	Service package I	20 pc.	W1	20 pc.	2063498
		EPS ***PLUS*** bolt on	Service package II	20 pc.	W1	20 pc.	2759108
		EPS ***PLUS***	Service package II	20 pc.	W1	20 pc.	2063504
		EPS ***PLUS***	Service package III	200 pc.	W1	20 pc.	2275797
W 1000 F	0710	EPS ***PLUS***	Service package I	20 pc.	W1	20 pc.	2063498
		Poly Grip	Service package I	20 pc.	W1	20 pc.	162455
		Poly Grip	Service package II	200 pc.	W1	20 pc.	2063664
		EPS ***PLUS*** bolt on	Service package II	20 pc.	W1	20 pc.	2759108
		EPS ***PLUS***	Service package II	20 pc.	W1	20 pc.	2063504
		EPS ***PLUS***	Service package III	200 pc.	W1	20 pc.	2275797

Further details on the displayed package types can be found at the end of the chapter "Service packages for track pads".

SERVICE PACKAGES FOR TRACK PADS

Series code	Serial code	Track pad system	Package type	Packaging unit	Crawler size	Track pads per crawler unit	Part no.
W 100 F	0810	Poly Grip	Service package I	20 pc.	W1	20 pc.	162455
		EPS ***PLUS***	Service package I	20 pc.	W1	20 pc.	2063498
		EPS ***PLUS*** bolt on	Service package II	20 pc.	W1	20 pc.	2759108
		EPS ***PLUS***	Service package II	20 pc.	W1	20 pc.	2063504
		Poly Grip	Service package II	200 pc.	W1	20 pc.	2063664
		EPS ***PLUS***	Service package III	200 pc.	W1	20 pc.	2275797
W 100 Fi	1310	EPS ***PLUS***	Service package I	20 pc.	W1	20 pc.	2063498
		Poly Grip	Service package I	20 pc.	W1	20 pc.	162455
		Poly Grip	Service package II	200 pc.	W1	20 pc.	2063664
		EPS ***PLUS*** bolt on	Service package II	20 pc.	W1	20 pc.	2759108
		EPS ***PLUS***	Service package II	20 pc.	W1	20 pc.	2063504
		EPS ***PLUS***	Service package III	200 pc.	W1	20 pc.	2275797
W 100 CF	1710	EPS ***PLUS***	Service package I	20 pc.	W1	20 pc.	2063498
		EPS ***PLUS*** bolt on	Service package II	20 pc.	W1	20 pc.	2759108
		EPS ***PLUS***	Service package II	20 pc.	W1	20 pc.	2063504
		EPS ***PLUS***	Service package III	200 pc.	W1	20 pc.	2275797
W 100 CFi	1810	EPS ***PLUS***	Service package I	20 pc.	W1	20 pc.	2063498
		EPS ***PLUS*** bolt on	Service package II	20 pc.	W1	20 pc.	2759108
		EPS ***PLUS***	Service package II	20 pc.	W1	20 pc.	2063504
		EPS ***PLUS***	Service package III	200 pc.	W1	20 pc.	2275797
W 100 XFi	1810	EPS ***PLUS***	Service package I	20 pc.	W1	20 pc.	2063498
		EPS ***PLUS*** bolt on	Service package II	20 pc.	W1	20 pc.	2759108
		EPS ***PLUS***	Service package II	20 pc.	W1	20 pc.	2063504
		EPS ***PLUS***	Service package III	200 pc.	W1	20 pc.	2275797
W 1200 F	0710	EPS ***PLUS***	Service package I	20 pc.	W1	20 pc.	2063498
		Poly Grip	Service package I	20 pc.	W1	20 pc.	162455

Further details on the displayed package types can be found at the end of the chapter "Service packages for track pads".

UNDERCARRIAGE CRAWLER DRIVE

SERVICE PACKAGES FOR TRACK PADS

Series code	Serial code	Track pad system	Package type	Packaging unit	Crawler size	Track pads per crawler unit	Part no.
W 1200 F	0710	Poly Grip	Service package II	200 pc.	W1	20 pc.	2063664
		EPS ***PLUS*** bolt on	Service package II	20 pc.	W1	20 pc.	2759108
		EPS ***PLUS***	Service package II	20 pc.	W1	20 pc.	2063504
		EPS ***PLUS***	Service package III	200 pc.	W1	20 pc.	2275797
W 120 F	0810	EPS ***PLUS***	Service package I	20 pc.	W1	20 pc.	2063498
		Poly Grip	Service package I	20 pc.	W1	20 pc.	162455
		Poly Grip	Service package II	200 pc.	W1	20 pc.	2063664
		EPS ***PLUS*** bolt on	Service package II	20 pc.	W1	20 pc.	2759108
		EPS ***PLUS***	Service package II	20 pc.	W1	20 pc.	2063504
		EPS ***PLUS***	Service package III	200 pc.	W1	20 pc.	2275797
W 120 Fi	1310	EPS ***PLUS***	Service package I	20 pc.	W1	20 pc.	2063498
		Poly Grip	Service package I	20 pc.	W1	20 pc.	162455
		Poly Grip	Service package II	200 pc.	W1	20 pc.	2063664
		EPS ***PLUS*** bolt on	Service package II	20 pc.	W1	20 pc.	2759108
		EPS ***PLUS***	Service package II	20 pc.	W1	20 pc.	2063504
		EPS ***PLUS***	Service package III	200 pc.	W1	20 pc.	2275797
W 120 CF	1710	EPS ***PLUS***	Service package I	20 pc.	W1	20 pc.	2063498
		EPS ***PLUS*** bolt on	Service package II	20 pc.	W1	20 pc.	2759108
		EPS ***PLUS***	Service package II	20 pc.	W1	20 pc.	2063504
		EPS ***PLUS***	Service package III	200 pc.	W1	20 pc.	2275797
W 120 CFi	1810	EPS ***PLUS***	Service package I	20 pc.	W1	20 pc.	2063498
		EPS ***PLUS*** bolt on	Service package II	20 pc.	W1	20 pc.	2759108
		EPS ***PLUS***	Service package II	20 pc.	W1	20 pc.	2063504
		EPS ***PLUS***	Service package III	200 pc.	W1	20 pc.	2275797
W 120 XTi	1810	EPS ***PLUS***	Service package I	20 pc.	W1	20 pc.	2063498
		EPS ***PLUS*** bolt on	Service package II	20 pc.	W1	20 pc.	2759108

Further details on the displayed package types can be found at the end of the chapter "Service packages for track pads".

SERVICE PACKAGES FOR TRACK PADS

Series code	Serial code	Track pad system	Package type	Packaging unit	Crawler size	Track pads per crawler unit	Part no.
W 120 XTi	1810	EPS ***PLUS***	Service package II	20 pc.	W1	20 pc.	2063504
		EPS ***PLUS***	Service package III	200 pc.	W1	20 pc.	2275797
W 120 XFi	1810	EPS ***PLUS***	Service package I	20 pc.	W1	20 pc.	2063498
		EPS ***PLUS*** bolt on	Service package II	20 pc.	W1	20 pc.	2759108
		EPS ***PLUS***	Service package II	20 pc.	W1	20 pc.	2063504
		EPS ***PLUS***	Service package III	200 pc.	W1	20 pc.	2275797
W 120 Fi	2710	EPS ***PLUS***	Service package I	20 pc.	W1	20 pc.	2063498
		EPS ***PLUS*** bolt on	Service package II	20 pc.	W1	20 pc.	2759108
		EPS ***PLUS***	Service package II	20 pc.	W1	20 pc.	2063504
		EPS ***PLUS***	Service package III	200 pc.	W1	20 pc.	2275797
W 120 FTi	2710	EPS ***PLUS***	Service package I	20 pc.	W1	20 pc.	2063498
		EPS ***PLUS*** bolt on	Service package II	20 pc.	W1	20 pc.	2759108
		EPS ***PLUS***	Service package II	20 pc.	W1	20 pc.	2063504
		EPS ***PLUS***	Service package III	200 pc.	W1	20 pc.	2275797
W 1300 F	0710	Poly Grip	Service package I	20 pc.	W1	20 pc.	162455
		EPS ***PLUS***	Service package I	20 pc.	W1	20 pc.	2063498
		EPS ***PLUS*** bolt on	Service package II	20 pc.	W1	20 pc.	2759108
		EPS ***PLUS***	Service package II	20 pc.	W1	20 pc.	2063504
		Poly Grip	Service package II	200 pc.	W1	20 pc.	2063664
		EPS ***PLUS***	Service package III	200 pc.	W1	20 pc.	2275797
W 130 F	0810	EPS ***PLUS***	Service package I	20 pc.	W1	20 pc.	2063498
		Poly Grip	Service package I	20 pc.	W1	20 pc.	162455
		Poly Grip	Service package II	200 pc.	W1	20 pc.	2063664
		EPS ***PLUS*** bolt on	Service package II	20 pc.	W1	20 pc.	2759108
		EPS ***PLUS***	Service package II	20 pc.	W1	20 pc.	2063504
		EPS ***PLUS***	Service package III	200 pc.	W1	20 pc.	2275797

Further details on the displayed package types can be found at the end of the chapter "Service packages for track pads".

SERVICE PACKAGES FOR TRACK PADS

Series code	Serial code	Track pad system	Package type	Packaging unit	Crawler size	Track pads per crawler unit	Part no.
W 130 Fi	1310	Poly Grip	Service package I	20 pc.	W1	20 pc.	162455
		EPS ***PLUS***	Service package I	20 pc.	W1	20 pc.	2063498
		EPS ***PLUS*** bolt on	Service package II	20 pc.	W1	20 pc.	2759108
		EPS ***PLUS***	Service package II	20 pc.	W1	20 pc.	2063504
		Poly Grip	Service package II	200 pc.	W1	20 pc.	2063664
		EPS ***PLUS***	Service package III	200 pc.	W1	20 pc.	2275797
W 130 CF	1710	EPS ***PLUS***	Service package I	20 pc.	W1	20 pc.	2063498
		EPS ***PLUS*** bolt on	Service package II	20 pc.	W1	20 pc.	2759108
		EPS ***PLUS***	Service package II	20 pc.	W1	20 pc.	2063504
		EPS ***PLUS***	Service package III	200 pc.	W1	20 pc.	2275797
W 130 CFi	1810	EPS ***PLUS***	Service package I	20 pc.	W1	20 pc.	2063498
		EPS ***PLUS***	Service package II	20 pc.	W1	20 pc.	2063504
		EPS ***PLUS*** bolt on	Service package II	20 pc.	W1	20 pc.	2759108
		EPS ***PLUS***	Service package III	200 pc.	W1	20 pc.	2275797
W 130 XFi	1810	EPS ***PLUS***	Service package I	20 pc.	W1	20 pc.	2063498
		EPS ***PLUS*** bolt on	Service package II	20 pc.	W1	20 pc.	2759108
		EPS ***PLUS***	Service package II	20 pc.	W1	20 pc.	2063504
		EPS ***PLUS***	Service package III	200 pc.	W1	20 pc.	2275797
W 130 Fi	2710	EPS ***PLUS***	Service package I	20 pc.	W1	20 pc.	2063498
		EPS ***PLUS*** bolt on	Service package II	20 pc.	W1	20 pc.	2759108
		EPS ***PLUS***	Service package II	20 pc.	W1	20 pc.	2063504
		EPS ***PLUS***	Service package III	200 pc.	W1	20 pc.	2275797
W 1500	0820	Poly Grip	Service package I	24 pc.	W1	24 pc.	85186
		EPS ***PLUS***	Service package I	24 pc.	W1	24 pc.	2063499
		EPS ***PLUS*** bolt on	Service package II	24 pc.	W1	24 pc.	2906480
		EPS ***PLUS***	Service package II	24 pc.	W1	24 pc.	2063505

Further details on the displayed package types can be found at the end of the chapter "Service packages for track pads".

SERVICE PACKAGES FOR TRACK PADS

Series code	Serial code	Track pad system	Package type	Packaging unit	Crawler size	Track pads per crawler unit	Part no.
W 1500	0820	Poly Grip	Service package II	200 pc.	W1	24 pc.	2063664
		EPS ***PLUS***	Service package III	200 pc.	W1	24 pc.	2275797
W 150	0513	EPS ***PLUS***	Service package I	20 pc.	W1	20 pc.	2063498
		Poly Grip	Service package I	20 pc.	W1	20 pc.	162455
		EPS ***PLUS***	Service package II	20 pc.	W1	20 pc.	2063504
		Poly Grip	Service package II	200 pc.	W1	20 pc.	2063664
		EPS ***PLUS*** bolt on	Service package II	20 pc.	W1	20 pc.	2759108
		EPS ***PLUS***	Service package III	200 pc.	W1	20 pc.	2275797
W 150i	0613	Poly Grip	Service package I	20 pc.	W1	20 pc.	162455
		EPS ***PLUS***	Service package I	20 pc.	W1	20 pc.	2063498
		EPS ***PLUS***	Service package II	20 pc.	W1	20 pc.	2063504
		Poly Grip	Service package II	200 pc.	W1	20 pc.	2063664
		EPS ***PLUS*** bolt on	Service package II	20 pc.	W1	20 pc.	2759108
		EPS ***PLUS***	Service package III	200 pc.	W1	20 pc.	2275797
W 150 CF	0713	EPS ***PLUS***	Service package I	20 pc.	W1	20 pc.	2063498
		EPS ***PLUS*** bolt on	Service package II	20 pc.	W1	20 pc.	2759108
		EPS ***PLUS***	Service package II	20 pc.	W1	20 pc.	2063504
		EPS ***PLUS***	Service package III	200 pc.	W1	20 pc.	2275797
W 150 CFi	0813	EPS ***PLUS***	Service package I	20 pc.	W1	20 pc.	2063498
		EPS ***PLUS*** bolt on	Service package II	20 pc.	W1	20 pc.	2759108
		EPS ***PLUS***	Service package II	20 pc.	W1	20 pc.	2063504
		EPS ***PLUS***	Service package III	200 pc.	W1	20 pc.	2275797
W 150 XFi	0813	EPS ***PLUS***	Service package I	20 pc.	W1	20 pc.	2063498
		EPS ***PLUS*** bolt on	Service package II	20 pc.	W1	20 pc.	2759108
		EPS ***PLUS***	Service package II	20 pc.	W1	20 pc.	2063504
		EPS ***PLUS***	Service package III	200 pc.	W1	20 pc.	2275797

Further details on the displayed package types can be found at the end of the chapter "Service packages for track pads".

UNDERCARRIAGE CRAWLER DRIVE

SERVICE PACKAGES FOR TRACK PADS

Series code	Serial code	Track pad system	Package type	Packaging unit	Crawler size	Track pads per crawler unit	Part no.
W 1900	0820	Poly Grip	Service package I	24 pc.	W1	24 pc.	85186
		EPS ***PLUS***	Service package I	24 pc.	W1	24 pc.	2063499
		EPS ***PLUS***	Service package II	24 pc.	W1	24 pc.	2063505
		Poly Grip	Service package II	200 pc.	W1	24 pc.	2063664
		EPS ***PLUS*** bolt on	Service package II	24 pc.	W1	24 pc.	2906480
		EPS ***PLUS***	Service package III	200 pc.	W1	24 pc.	2275797
	0920, 1020	Poly Grip	Service package I	24 pc.	W1	24 pc.	85186
		EPS ***PLUS***	Service package I	24 pc.	W1	24 pc.	2063499
		EPS ***PLUS*** bolt on	Service package II	24 pc.	W1	24 pc.	2906480
		EPS ***PLUS***	Service package II	24 pc.	W1	24 pc.	2063505
		Poly Grip	Service package II	200 pc.	W1	24 pc.	2063664
		EPS ***PLUS***	Service package III	200 pc.	W1	24 pc.	2275797
W 195	1820	EPS ***PLUS***	Service package II	24 pc.	W1	24 pc.	2063505
		EPS ***PLUS*** bolt on	Service package II	24 pc.	W1	24 pc.	2906480
		EPS ***PLUS***	Service package III	200 pc.	W1	24 pc.	2275797
W 2000	0620	Poly Grip	Service package I	23 pc.	W3	23 pc.	162456
		EPS ***PLUS***	Service package I	23 pc.	W3	23 pc.	2063500
		EPS ***PLUS***	Service package II	23 pc.	W3	23 pc.	2063506
		Poly Grip	Service package II	200 pc.	W3	23 pc.	2063665
		EPS ***PLUS*** bolt on	Service package II	23 pc.	W3	23 pc.	3017367
		EPS ***PLUS***	Service package III	200 pc.	W3	23 pc.	2275798
	1120	EPS ***PLUS***	Service package I	23 pc.	W3	23 pc.	2063500
		Poly Grip	Service package I	23 pc.	W3	23 pc.	162456
		Poly Grip	Service package II	200 pc.	W3	23 pc.	2063665
		EPS ***PLUS*** bolt on	Service package II	23 pc.	W3	23 pc.	3017367
		EPS ***PLUS***	Service package II	23 pc.	W3	23 pc.	2063506

Further details on the displayed package types can be found at the end of the chapter "Service packages for track pads".

SERVICE PACKAGES FOR TRACK PADS

Series code	Serial code	Track pad system	Package type	Packaging unit	Crawler size	Track pads per crawler unit	Part no.
W 2000	1120	EPS ***PLUS***	Service package III	200 pc.	W3	23 pc.	2275798
W 200	1220	EPS ***PLUS***	Service package II	24 pc.	W1	24 pc.	2063505
		EPS ***PLUS*** bolt on	Service package II	24 pc.	W1	24 pc.	2906480
		EPS ***PLUS***	Service package III	200 pc.	W1	24 pc.	2275797
W 200i	1420	EPS ***PLUS*** bolt on	Service package II	24 pc.	W1	24 pc.	2906480
		EPS ***PLUS***	Service package II	24 pc.	W1	24 pc.	2063505
		EPS ***PLUS***	Service package III	200 pc.	W1	24 pc.	2275797
W 200 F	2020	EPS ***PLUS*** bolt on	Service package II	23 pc.	W1	23 pc.	2906483
		EPS ***PLUS***	Service package II	23 pc.	W1	23 pc.	2703012
		EPS ***PLUS***	Service package III	200 pc.	W1	23 pc.	2275797
W 200 Fi	2120	EPS ***PLUS*** bolt on	Service package II	23 pc.	W1	23 pc.	2906483
		EPS ***PLUS***	Service package II	23 pc.	W1	23 pc.	2703012
		EPS ***PLUS***	Service package III	200 pc.	W1	23 pc.	2275797
W 200 H	1620	EPS ***PLUS*** bolt on	Service package II	24 pc.	W1	24 pc.	2906480
		EPS ***PLUS***	Service package II	24 pc.	W1	24 pc.	2063505
		EPS ***PLUS***	Service package III	200 pc.	W1	24 pc.	2275797
W 200 Hi	1720	EPS ***PLUS*** bolt on	Service package II	24 pc.	W1	24 pc.	2906480
		EPS ***PLUS***	Service package II	24 pc.	W1	24 pc.	2063505
		EPS ***PLUS***	Service package III	200 pc.	W1	24 pc.	2275797
W 205	2520	EPS ***PLUS*** bolt on	Service package II	23 pc.	W3	23 pc.	3017367
		EPS ***PLUS***	Service package II	23 pc.	W3	23 pc.	2063506
		EPS ***PLUS***	Service package III	200 pc.	W3	23 pc.	2275798
W 207 Fi	2120	EPS ***PLUS*** bolt on	Service package II	23 pc.	W3	23 pc.	3017367
		EPS ***PLUS***	Service package II	23 pc.	W3	23 pc.	2063506
		EPS ***PLUS***	Service package III	200 pc.	W3	23 pc.	2275798
W 2100	0921	EPS ***PLUS***	Service package I	24 pc.	W4	24 pc.	2063502

Further details on the displayed package types can be found at the end of the chapter "Service packages for track pads".

UNDERCARRIAGE CRAWLER DRIVE

SERVICE PACKAGES FOR TRACK PADS

Series code	Serial code	Track pad system	Package type	Packaging unit	Crawler size	Track pads per crawler unit	Part no.
W 2100	0921	Poly Grip	Service package I	24 pc.	W4	24 pc.	165045
		EPS ***PLUS***	Service package II	24 pc.	W4	24 pc.	2063649
		Poly Grip	Service package II	100 pc.	W4	24 pc.	2063666
		EPS ***PLUS***	Service package III	100 pc.	W4	24 pc.	2275799
W 210	1320	EPS ***PLUS***	Service package II	23 pc.	W3	23 pc.	2063506
		EPS ***PLUS*** bolt on	Service package II	23 pc.	W3	23 pc.	3017367
		EPS ***PLUS***	Service package III	200 pc.	W3	23 pc.	2275798
W 210i	1520	EPS ***PLUS***	Service package II	23 pc.	W3	23 pc.	2063506
		EPS ***PLUS*** bolt on	Service package II	23 pc.	W3	23 pc.	3017367
		EPS ***PLUS***	Service package III	200 pc.	W3	23 pc.	2275798
W 210 Fi	2320	EPS ***PLUS*** bolt on	Service package II	23 pc.	W3	23 pc.	3017367
		EPS ***PLUS***	Service package II	23 pc.	W3	23 pc.	2063506
		EPS ***PLUS***	Service package III	200 pc.	W3	23 pc.	2275798
W 210 XP	2420	EPS ***PLUS*** bolt on	Service package II	23 pc.	W3	23 pc.	3017367
		EPS ***PLUS***	Service package II	23 pc.	W3	23 pc.	2063506
		EPS ***PLUS***	Service package III	200 pc.	W3	23 pc.	2275798
W 215	1920	EPS ***PLUS*** bolt on	Service package II	23 pc.	W3	23 pc.	3017367
		EPS ***PLUS***	Service package II	23 pc.	W3	23 pc.	2063506
		EPS ***PLUS***	Service package III	200 pc.	W3	23 pc.	2275798
W 2200	0821	EPS ***PLUS***	Service package I	26 pc.	W5	26 pc.	2063503
		Poly Grip	Service package I	26 pc.	W5	26 pc.	130346
		Poly Grip	Service package II	104 pc.	W5	26 pc.	2063667
		EPS ***PLUS***	Service package II	26 pc.	W5	26 pc.	2063650
		EPS ***PLUS***	Service package III	104 pc.	W5	26 pc.	2275800
W 220	0522	EPS ***PLUS***	Service package II	24 pc.	W4	24 pc.	2063649
		EPS ***PLUS***	Service package III	100 pc.	W4	24 pc.	2275799

Further details on the displayed package types can be found at the end of the chapter "Service packages for track pads".

SERVICE PACKAGES FOR TRACK PADS

Series code	Serial code	Track pad system	Package type	Packaging unit	Crawler size	Track pads per crawler unit	Part no.
W 220i	0722	EPS ***PLUS***	Service package II	24 pc.	W4	24 pc.	2063649
		EPS ***PLUS***	Service package III	100 pc.	W4	24 pc.	2275799
W 220 Fi	1122	EPS ***PLUS***	Service package II	24 pc.	W4	24 pc.	2063649
		EPS ***PLUS***	Service package III	100 pc.	W4	24 pc.	2275799
W 250	0422	EPS ***PLUS***	Service package II	26 pc.	W5	26 pc.	2063650
		EPS ***PLUS***	Service package III	104 pc.	W5	26 pc.	2275800
W 250i	0622	EPS ***PLUS***	Service package II	26 pc.	W5	26 pc.	2063650
		EPS ***PLUS***	Service package III	104 pc.	W5	26 pc.	2275800
W 250 Fi	1322	EPS ***PLUS***	Service package II	26 pc.	W5	26 pc.	2063650
		EPS ***PLUS***	Service package III	104 pc.	W5	26 pc.	2275800
2200 CR	0821	EPS ***PLUS***	Service package I	26 pc.	W5	26 pc.	2063503
		EPS ***PLUS***	Service package II	26 pc.	W5	26 pc.	2063650
		EPS ***PLUS***	Service package III	104 pc.	W5	26 pc.	2275800
W 240 CR	03CR	EPS ***PLUS***	Service package II	26 pc.	W5	26 pc.	2063650
		EPS ***PLUS***	Service package III	104 pc.	W5	26 pc.	2275800
W 240 CRi	04CR	EPS ***PLUS***	Service package II	26 pc.	W5	26 pc.	2063650
		EPS ***PLUS***	Service package III	104 pc.	W5	26 pc.	2275800
W 380 CR	03CR	EPS ***PLUS***	Service package II	26 pc.	W5	26 pc.	2063650
		EPS ***PLUS***	Service package III	104 pc.	W5	26 pc.	2275800
W 380 CRi	04CR	EPS ***PLUS***	Service package II	26 pc.	W5	26 pc.	2063650
		EPS ***PLUS***	Service package III	104 pc.	W5	26 pc.	2275800
SP 150	09SP	Poly Grip	Service package I	20 pc.	W1	20 pc.	162455
		Poly Grip	Service package II	200 pc.	W1	20 pc.	2063664
SP 15	12SP	Poly Grip	Service package I	20 pc.	W1	20 pc.	162455
		Poly Grip	Service package II	200 pc.	W1	20 pc.	2063664
SP 15i	14SP	Poly Grip	Service package I	20 pc.	W1	20 pc.	162455

Further details on the displayed package types can be found at the end of the chapter "Service packages for track pads".

UNDERCARRIAGE CRAWLER DRIVE

SERVICE PACKAGES FOR TRACK PADS

Series code	Serial code	Track pad system	Package type	Packaging unit	Crawler size	Track pads per crawler unit	Part no.
SP 15i	14SP	Poly Grip	Service package II	200 pc.	W1	20 pc.	2063664
W 100 F	2610	EPS ***PLUS***	Service package I	20 pc.	W1	20 pc.	2063498
		EPS ***PLUS***	Service package II	20 pc.	W1	20 pc.	2063504
		EPS ***PLUS*** bolt on	Service package II	20 pc.	W1	20 pc.	2759108
		EPS ***PLUS***	Service package III	200 pc.	W1	20 pc.	2275797
W 120 F	2610	EPS ***PLUS***	Service package I	20 pc.	W1	20 pc.	2063498
		EPS ***PLUS***	Service package II	20 pc.	W1	20 pc.	2063504
		EPS ***PLUS*** bolt on	Service package II	20 pc.	W1	20 pc.	2759108
		EPS ***PLUS***	Service package III	200 pc.	W1	20 pc.	2275797
W 130 F	2610	EPS ***PLUS***	Service package I	20 pc.	W1	20 pc.	2063498
		EPS ***PLUS*** bolt on	Service package II	20 pc.	W1	20 pc.	2759108
		EPS ***PLUS***	Service package II	20 pc.	W1	20 pc.	2063504
		EPS ***PLUS***	Service package III	200 pc.	W1	20 pc.	2275797
W 150 Fi	1013	EPS ***PLUS***	Service package I	20 pc.	W1	20 pc.	2063498
		EPS ***PLUS***	Service package II	20 pc.	W1	20 pc.	2063504
		EPS ***PLUS*** bolt on	Service package II	20 pc.	W1	20 pc.	2759108
		EPS ***PLUS***	Service package III	200 pc.	W1	20 pc.	2275797
W 150 F	0913	EPS ***PLUS***	Service package I	20 pc.	W1	20 pc.	2063498
		EPS ***PLUS***	Service package II	20 pc.	W1	20 pc.	2063504
		EPS ***PLUS*** bolt on	Service package II	20 pc.	W1	20 pc.	2759108
		EPS ***PLUS***	Service package III	200 pc.	W1	20 pc.	2275797
W 195 i	2620	EPS ***PLUS***	Service package I	23 pc.	W3	23 pc.	2063500
		EPS ***PLUS*** bolt on	Service package II	23 pc.	W3	23 pc.	2906483
		EPS ***PLUS***	Service package II	23 pc.	W3	23 pc.	2063506
		EPS ***PLUS***	Service package III	200 pc.	W3	23 pc.	2275798
W 205 i	2720	EPS ***PLUS***	Service package I	23 pc.	W3	23 pc.	2063500

Further details on the displayed package types can be found at the end of the chapter "Service packages for track pads".

SERVICE PACKAGES FOR TRACK PADS

Series code	Serial code	Track pad system	Package type	Packaging unit	Crawler size	Track pads per crawler unit	Part no.
W 205 i	2720	EPS ***PLUS*** bolt on	Service package II	23 pc.	W3	23 pc.	2906483
		EPS ***PLUS***	Service package II	23 pc.	W3	23 pc.	2063506
		EPS ***PLUS***	Service package III	200 pc.	W3	23 pc.	2275798
W 215 i	2820	EPS ***PLUS***	Service package I	23 pc.	W3	23 pc.	2063500
		EPS ***PLUS***	Service package II	23 pc.	W3	23 pc.	2063506
		EPS ***PLUS*** bolt on	Service package II	23 pc.	W3	23 pc.	2906483
		EPS ***PLUS***	Service package III	200 pc.	W3	23 pc.	2275798
W 220 XFi	1422	EPS ***PLUS***	Service package II	24 pc.	W4	24 pc.	2063649
W 210 F	2220	EPS ***PLUS***	Service package II	24 pc.	W3	24 pc.	2063505
		EPS ***PLUS*** bolt on	Service package II	24 pc.	W3	24 pc.	2906480
		EPS ***PLUS***	Service package III	200 pc.	W3	24 pc.	2275798
W 220 F	1022	EPS ***PLUS***	Service package II	24 pc.	W4	24 pc.	2063649
		EPS ***PLUS*** bolt on	Service package II	24 pc.	W4	24 pc.	2906480

Further details on the displayed package types can be found at the end of the chapter "Service packages for track pads".

ADDITIONAL INFORMATION ON THE PACKAGE CONTENTS OF THE SERVICE PACKAGES FOR THE TRACK PAD SYSTEMS		
Track pad system	Package type	Package content
EPS ***PLUS***	Service package I	1 Package contains all the components needed to convert a crawler unit to EPS ***PLUS***
EPS ***PLUS***	Service package II	1 Package contains all the components needed to mount the track pads to the crawler unit
EPS ***PLUS***	Service package III	1 Package contains all the components needed to mount the number of track pads indicated under packaging unit
EPS ***PLUS*** bolt on	Service package II	1 Package contains all the components needed to mount the track pads to the crawler unit
Poly Grip	Service package I	1 Package contains all the components needed to mount the track pads to the crawler unit
Poly Grip	Service package II	1 Package contains all the components needed to mount the number of track pads indicated under packaging unit

UNDERCARRIAGE WHEEL DRIVE

Machine traction plays an extremely important role in achieving optimum milling performance. The objective is to ensure that the machine and the wheels are perfectly compatible with each other. Genuine WIRTGEN wheels have been designed on the basis of many years of experience to achieve the best possible results with WIRTGEN small milling machines and cold recyclers and to minimise wear costs.

> Read more online

TYRES

Tyres made of cut-resistant elastomer optimise the characteristic properties of the WIRTGEN small milling machines.

TYRES				
Series code	Serial code	Series range	Position	Part no.
W 35 DC	0403	1 - 9999	front	2138566
W 35 Ri	0703	1 - 9999	front	2138566
W 500	0605	1 - 9999	3 wheels, front; 3 wheels, rear; 4 wheels, rear	57151

Original WIRTGEN

UNDERCARRIAGE WHEEL DRIVE

TYRES				
Series code	Serial code	Series range	Position	Part no.
W 500	0605	1 - 9999	4 wheels, front	74626
W 50	0805	1 - 67	3 wheels, rear; 4 wheels, rear	171108
		1 - 9999	4 wheels, front	2136645
			3 wheels, front	2136675
		68 - 9999	3 wheels, rear; 4 wheels, rear	2136675
	1005	1 - 9999	4 wheels, front	2136645
			3 wheels, front; 3 wheels, rear; 4 wheels, rear	2136675
W 50 DC	0905	1 - 50	3 wheels, rear; 4 wheels, rear	57151
		1 - 99	4 wheels, front	2136645
			3 wheels, front	2136675
		51 - 9999	3 wheels, rear; 4 wheels, rear	2136675
		100 - 9999	4 wheels, front	2136645
			3 wheels, front	2136675
W 50 DCi	1205	1 - 9999	4 wheels, front	2136645
			3 wheels, front; 3 wheels, rear; 4 wheels, rear	2136675
W 50 R	1405	1 - 9999	3 wheels, front; 4 wheels, front	2286953
			3 wheels, rear; 4 wheels, rear	2136675
W 50 Ri	1505	1 - 9999	3 wheels, rear; 4 wheels, rear	2136675
			3 wheels, front; 4 wheels, front	2286953
W 50 H	1305	88 - 9999	rear	2453785
			front	2453888
W 55 H	1305	88 - 9999	rear	2453785
			front	2453888
W 60 R	1405	1 - 9999	3 wheels, rear; 4 wheels, rear	2136675
			3 wheels, front; 4 wheels, front	2286953
W 60 Ri	1505	1 - 9999	3 wheels, rear; 4 wheels, rear	2136675

TYRES				
Series code	Serial code	Series range	Position	Part no.
W 60 Ri	1505	1 - 9999	3 wheels, front; 4 wheels, front	2286953
W 60	0910	1 - 9999	3 wheels, front	2136699
			3 wheels, rear; 4 wheels, rear	2136696
			4 wheels, front	2136688
W 60i	1210	1 - 9999	3 wheels, front	2136699
			3 wheels, rear; 4 wheels, rear	2136696
			4 wheels, front	2136688
W 100	0910	1 - 9999	4 wheels, front	2136688
			3 wheels, front	2136699
			3 wheels, rear; 4 wheels, rear	2136696
W 100i	1210	1 - 9999	4 wheels, front	2136688
			3 wheels, front	2136699
			3 wheels, rear; 4 wheels, rear	2136696
W 100	1010	88 - 9999	front	2149237
			rear	2149239
W 100 H	1910	88 - 9999	rear	2149239
			front	2149237
W 100	1110	1 - 9999	3 wheels, rear; 4 wheels, rear	2136696
			4 wheels, front	2136688
			3 wheels, front	2136699
W 100 R	1510	1 - 9999	4 wheels, front	2136688
			3 wheels, front	2136699
			3 wheels, rear; 4 wheels, rear	2136696
W 100 Ri	1610	1 - 9999	3 wheels, front	2136699
			4 wheels, front	2136688
			3 wheels, rear; 4 wheels, rear	2136696

Original WIRTGEN

UNDERCARRIAGE WHEEL DRIVE

TYRES				
Series code	Serial code	Series range	Position	Part no.
W 100 H	1410	88 - 9999	front	2149237
			rear	2149239
W 120 R	1510	1 - 9999	4 wheels, front	2136688
			3 wheels, front	2136699
			3 wheels, rear; 4 wheels, rear	2136696
W 120 Ri	1610	1 - 9999	3 wheels, front	2136699
			3 wheels, rear; 4 wheels, rear	2136696
			4 wheels, front	2136688
W 130 H	1410, 1910	88 - 9999	rear	2149239
			front	2149237
W 1000 F	0710	1 - 9999	front; rear	123417
W 100 F	0810	1 - 9999	front; rear	123417
W 100 Fi	1310	1 - 9999	front; rear	123417
W 100 CF	1710	1 - 9999	front; rear	123417
W 100 CFi	1810	1 - 9999	front; rear	123417
W 1200 F	0710	1 - 9999	front; rear	123417
W 120 F	0810	1 - 9999	front; rear	123417
W 120 Fi	1310	1 - 9999	front; rear	123417
W 120 CF	1710	1 - 9999	front; rear	123417
W 120 CFi	1810	1 - 9999	front; rear	123417
W 1300 F	0710	1 - 9999	front; rear	123417
W 130 F	0810	1 - 9999	front; rear	123417
W 130 Fi	1310	1 - 9999	front; rear	123417
W 130 CF	1710	1 - 9999	front; rear	123417
W 130 CFi	1810	1 - 9999	front; rear	123417

PNEUMATIC TYRES

High-quality pneumatic tyres from WIRTGEN ensure that our hot recyclers have the optimum grip, even in the most extreme conditions.

PNEUMATIC TYRES		
Series code	Serial code	Part no.
4500 HM	02HM	15374
HM 4500	06HM	15374

WHEELS

Wheels made of cut-resistant elastomer rubber provide traction and guarantee smooth operation.

WHEELS						
Series code	Serial code	Series range	Part	Position	S-Pack	Part no.
W 35 DC	0403	1 - 9999	Complete wheel	front		2138565
				rear		181793
W 35 Ri	0703	1 - 9999	Complete wheel	front		2138565
				rear		181793
W 500	0605	1 - 9999	Complete wheel	4 wheels, front		62602
				3 wheels, front; 3 wheels, rear; 4 wheels, rear		53348
W 50	0805	1 - 67	Complete wheel	3 wheels, rear; 4 wheels, rear		172139
		1 - 9999	Complete wheel	4 wheels, front		2136641
				3 wheels, front		2136673

Original WIRTGEN

UNDERCARRIAGE WHEEL DRIVE

WHEELS						
Series code	Serial code	Series range	Part	Position	S-Pack	Part no.
W 50	0805	68 - 9999	Complete wheel	3 wheels, rear; 4 wheels, rear		2136678
	1005	1 - 9999	Complete wheel	4 wheels, front		2136641
				3 wheels, rear; 4 wheels, rear		2136678
				3 wheels, front		2136673
W 50 DC	0905	1 - 50	Complete wheel	3 wheels, rear; 4 wheels, rear		173684
		1 - 99	Complete wheel	4 wheels, front		2136641
				3 wheels, front		2136673
		51 - 9999	Complete wheel	3 wheels, rear; 4 wheels, rear		2136678
		100 - 9999	Complete wheel	4 wheels, front		2136670
				3 wheels, front		2136683
W 50 DCi	1205	1 - 9999	Complete wheel	4 wheels, front		2136670
				3 wheels, front		2136683
				3 wheels, rear; 4 wheels, rear		2136678
W 50 R	1405	1 - 9999	Complete wheel	3 wheels, rear; 4 wheels, rear		2286962
				3 wheels, front		2347467
				4 wheels, front		2286975
W 50 Ri	1505	1 - 9999	Complete wheel	3 wheels, rear; 4 wheels, rear		2286962
				3 wheels, front		2347467
				4 wheels, front		2286975
W 50 H	1305	88 - 9999	Complete wheel	front		2453827
				rear		2453783
W 55 H	1305	88 - 9999	Complete wheel	front		2453827
				rear		2453783
W 60 R	1405	1 - 9999	Complete wheel	3 wheels, rear; 4 wheels, rear		2286962
				3 wheels, front		2347467
				4 wheels, front		2286975

WHEELS

Series code	Serial code	Series range	Part	Position	S-Pack	Part no.
W 60 Ri	1505	1 - 9999	Complete wheel	3 wheels, rear; 4 wheels, rear		2286962
				3 wheels, front		2347467
				4 wheels, front		2286975
W 60	0910	1 - 9999	Complete wheel	4 wheels, front		2136687
				3 wheels, front		2136698
				3 wheels, rear; 4 wheels, rear		2136695
W 60i	1210	1 - 9999	Complete wheel	4 wheels, front		2136687
				3 wheels, front		2136698
				3 wheels, rear; 4 wheels, rear		2136695
W 100	0910	1 - 9999	Complete wheel	4 wheels, front		2136687
				3 wheels, front		2136698
				3 wheels, rear; 4 wheels, rear		2136695
W 100i	1210	1 - 9999	Complete wheel	4 wheels, front		2136687
				3 wheels, front		2136698
				3 wheels, rear; 4 wheels, rear		2136695
W 100	1010	88 - 9999	Complete wheel	rear		2149234
				front		2149233
W 100 H	1910	88 - 9999	Complete wheel	rear		2149234
				front		2149233
W 100	1110	1 - 9999	Complete wheel	4 wheels, front		2136687
				3 wheels, front		2136698
				3 wheels, rear; 4 wheels, rear		2136695
W 100 R	1510	1 - 9999	Complete wheel	4 wheels, front		2136687
				3 wheels, front		2136698
				3 wheels, rear; 4 wheels, rear		2136695
W 100 Ri	1610	1 - 9999	Complete wheel	4 wheels, front		2136687

UNDERCARRIAGE WHEEL DRIVE

WHEELS						
Series code	Serial code	Series range	Part	Position	S-Pack	Part no.
W 100 Ri	1610	1 - 9999	Complete wheel	3 wheels, front		2136698
				3 wheels, rear; 4 wheels, rear		2136695
W 100 H	1410	88 - 9999	Complete wheel	rear		2149234
				front		2149233
W 120 R	1510	1 - 9999	Complete wheel	4 wheels, front		2136687
				3 wheels, front		2136698
				3 wheels, rear; 4 wheels, rear		2136695
W 120 Ri	1610	1 - 9999	Complete wheel	4 wheels, front		2136687
				3 wheels, front		2136698
				3 wheels, rear; 4 wheels, rear		2136695
W 130 H	1410, 1910	88 - 9999	Complete wheel	rear		2149234
				front		2149233
W 1000 F	0710	1 - 9999	Complete wheel	front; rear		125782
W 100 F	0810	1 - 9999	Complete wheel	front; rear		125782
W 100 Fi	1310	1 - 9999	Complete wheel	front; rear		125782
W 100 CF	1710	1 - 9999	Complete wheel	front; rear		125782
W 100 CFi	1810	1 - 9999	Complete wheel	front; rear		125782
W 1200 F	0710	1 - 9999	Complete wheel	front; rear		125782
W 120 F	0810	1 - 9999	Complete wheel	front; rear		125782
W 120 Fi	1310	1 - 9999	Complete wheel	front; rear		125782
W 120 CF	1710	1 - 9999	Complete wheel	front; rear		125782
W 120 CFi	1810	1 - 9999	Complete wheel	front; rear		125782
W 1300 F	0710	1 - 9999	Complete wheel	front; rear		125782
W 130 F	0810	1 - 9999	Complete wheel	front; rear		125782
W 130 Fi	1310	1 - 9999	Complete wheel	front; rear		125782
W 130 CF	1710	1 - 9999	Complete wheel	front; rear		125782

WHEELS

Series code	Serial code	Series range	Part	Position	S-Pack	Part no.
W 130 CFi	1810	1 - 9999	Complete wheel	front; rear		125782
WR 2000	03WR	1 - 9999	Complete wheel	right		2292199
				left		2292198
WR 200	06WR	1 - 9999	Complete wheel	left		2292198
				right		2292199
WR 200i	09WR	1 - 9999	Complete wheel	right		2292199
				left		2292198
WR 2400	05WR	1 - 9999	Complete wheel	left		2472152
				right		2472153
WR 240	07WR	1 - 9999	Complete wheel	right	with	2486382
				left	with	2486381
				left	without	2472152
				right	without	2472153
WR 240i	10WR	1 - 9999	Complete wheel	right	with	2486382
				right	without	2472153
				left	without	2472152
				left	with	2486381
WR 2500 S	04WR	1 - 9999	Complete wheel	right		2472153
				left		2472152
WR 250	08WR	1 - 9999	Complete wheel	right	with	2486382
				left	without	2472152
				right	without	2472153
				left	with	2486381
WR 250i	11WR	1 - 9999	Complete wheel	right	with	2486382
				right	without	2472153
				left	without	2472152

Original WIRTGEN

UNDERCARRIAGE WHEEL DRIVE

WHEELS						
Series code	Serial code	Series range	Part	Position	S-Pack	Part no.
WR 250i	11WR	1 - 9999	Complete wheel	left	with	2486381
RX 4500	05RX	1 - 9999	Complete wheel	front; rear		32627
4500 HM	02HM	1 - 9999	Complete wheel	front; rear		15680
HM 4500	06HM	1 - 9999	Complete wheel	front; rear		15680

TUBES

We also offer our high-quality tubes for our genuine WIRTGEN pneumatic tyres, which are perfectly tailored to the specifications, separately.

TUBES			
Series code	Serial code	Part	Part no.
4500 HM	02HM	Tube for pneumatic tyre	15375
HM 4500	06HM	Tube for pneumatic tyre	15375

SOLID TYRE

The solid tyres for WIRTGEN's WR series make it easy to handle even the most difficult ground conditions.

SOLID TYRE			
Series code	Serial code	S-Pack	Part no.
WR 2000	03WR		2292195
WR 200	06WR		2292195
WR 200i	09WR		2292195
WR 240	07WR	with	2486380
WR 240i	10WR	with	2486380

SOLID TYRE			
Series code	Serial code	S-Pack	Part no.
WR 250	08WR	with	2486380
WR 250i	11WR	with	2486380
RX 4500	05RX		32023

Original WIRTGEN

CONVEYOR UNIT

The milling performance of WIRTGEN road milling machines is largely determined by the conveying capacity of the conveyor unit systems. An optimised cross-section with built-in longitudinal seals and particularly high conveying cleats all serve to maximise these machines' conveying capacity. Thanks to their durable splice, conveyor belts produced via the hot vulcanisation process also stand out for their long service life. The perfect interaction of all WIRTGEN premium components ensures that our conveyor unit systems are highly reliable and deliver maximum performance. In addition to the conveyor belts themselves, the guide, belt, drive and return rollers specially developed to reliably transport milled material therefore also play an important role.

> Read more online

DRIVE ROLLERS

WIRTGEN drive rollers' thick-walled special rubber compound guarantees reliable power transmission for a long service life. The diamond design also helps to prevent asphalt adhesion.

DRIVE ROLLERS			
Series code	Serial code	Conveyor type	Part no.
W 35 DC	0403	Discharge conveyor	182505
W 35 Ri	0703	Discharge conveyor	182505
W 35 XRi	0703	Discharge conveyor	182505

DRIVE ROLLERS			
Series code	Serial code	Conveyor type	Part no.
W 500	0605	Discharge conveyor	43231
W 50	0805, 1005	Discharge conveyor	43231
W 50 DC	0905	Discharge conveyor	43231
W 50 DCi	1205	Discharge conveyor	43231
W 50 R	1405	Discharge conveyor	2279067
W 50 Ri	1505	Discharge conveyor	2279067
W 50 H	1305	Discharge conveyor	43231
W 55 H	1305	Discharge conveyor	43231
W 55 HR	1805	Discharge conveyor	43231
W 60 R	1405	Discharge conveyor	2279067
W 60 Ri	1505	Discharge conveyor	2279067
W 60	0910	Discharge conveyor	72052
W 60i	1210	Discharge conveyor	72052
W 100	0910	Discharge conveyor	72052
W 100i	1210	Discharge conveyor	72052
W 100	1010	Discharge conveyor	72052
W 100 L	1010	Discharge conveyor	72052
W 100 H	1910	Discharge conveyor	43231
W 100	1110	Discharge conveyor	72052
W 100 R	1510	Discharge conveyor	72052
W 100 Ri	1610	Discharge conveyor	72052
W 100 H	1410	Discharge conveyor	43231
W 100 HR	2110	Discharge conveyor	43231
W 100 Fi	2710	Loading conveyor; Discharge conveyor	2887360
W 120 R	1510	Discharge conveyor	72052
W 120 Ri	1610	Discharge conveyor	72052
W 130 H	1410, 1910	Discharge conveyor	43231

Original WIRTGEN

CONVEYOR UNIT

DRIVE ROLLERS			
Series code	Serial code	Conveyor type	Part no.
W 130 HR	2210	Discharge conveyor	43231
W 1000 F	0710	Discharge conveyor; Loading conveyor	90117
W 100 F	0810	Discharge conveyor	90117
		Loading conveyor	190358
W 100 Fi	1310	Loading conveyor	190358
		Discharge conveyor	90117
W 100 CF	1710	Loading conveyor	190358
		Discharge conveyor	90117
W 100 CFi	1810	Discharge conveyor	90117
		Loading conveyor	190358
W 100 XFi	1810	Loading conveyor	190358
		Discharge conveyor	90117
W 1200 F	0710	Discharge conveyor; Loading conveyor	90117
W 120 F	0810	Loading conveyor	190358
		Discharge conveyor	90117
W 120 Fi	1310	Discharge conveyor	90117
		Loading conveyor	190358
W 120 CF	1710	Loading conveyor	190358
		Discharge conveyor	90117
W 120 CFi	1810	Loading conveyor	190358
		Discharge conveyor	90117
W 120 XTi	1810	Loading conveyor	190358
		Discharge conveyor	90117
W 120 XFi	1810	Loading conveyor	190358
		Discharge conveyor	90117
W 120 Fi	2710	Loading conveyor; Discharge conveyor	2887360
W 120 FTi	2710	Loading conveyor; Discharge conveyor	2887360

DRIVE ROLLERS			
Series code	Serial code	Conveyor type	Part no.
W 1300 F	0710	Discharge conveyor; Loading conveyor	90117
W 130 F	0810	Loading conveyor	190358
		Discharge conveyor	90117
W 130 Fi	1310	Loading conveyor	190358
		Discharge conveyor	90117
W 130 CF	1710	Loading conveyor	190358
		Discharge conveyor	90117
W 130 CFi	1810	Loading conveyor	190358
		Discharge conveyor	90117
W 130 XFi	1810	Loading conveyor	190358
		Discharge conveyor	90117
W 130 Fi	2710	Loading conveyor; Discharge conveyor	2887360
W 1500	0820	Discharge conveyor	95865
		Loading conveyor	52667
W 150	0513	Loading conveyor	190358
		Discharge conveyor	90117
W 150i	0613	Loading conveyor	190358
		Discharge conveyor	90117
W 150 CF	0713	Loading conveyor	190358
		Discharge conveyor	90117
W 150 CFi	0813	Discharge conveyor	90117
		Loading conveyor	190358
W 150 XFi	0813	Discharge conveyor	90117
		Loading conveyor	190358
W 1900	0820	Loading conveyor	52667
		Discharge conveyor	95865
	0920	Discharge conveyor	95865

Original WIRTGEN

CONVEYOR UNIT

DRIVE ROLLERS			
Series code	Serial code	Conveyor type	Part no.
W 1900	0920	Loading conveyor	52667
	1020	Loading conveyor	52667
		Discharge conveyor	95865
W 195	1820	Loading conveyor; Discharge conveyor	2107985
W 2000	0620, 1120	Loading conveyor; Discharge conveyor	95865
W 200	1220	Loading conveyor; Discharge conveyor	2107985
W 200i	1420	Loading conveyor; Discharge conveyor	2107985
W 200 F	2020	Loading conveyor; Discharge conveyor	2107985
W 200 Fi	2120	Loading conveyor; Discharge conveyor	2107985
W 200 H	1620	Loading conveyor; Discharge conveyor	95865
		Discharge conveyor	2107985
W 200 Hi	1720	Discharge conveyor	2107985
		Loading conveyor; Discharge conveyor	95865
W 205	2520	Loading conveyor; Discharge conveyor	2107985
W 207 Fi	2120	Loading conveyor; Discharge conveyor	2107985
W 2100	0921	Loading conveyor; Discharge conveyor	138926
W 210	1320	Loading conveyor; Discharge conveyor	2107985
W 210i	1520	Loading conveyor; Discharge conveyor	2107985
W 210 Fi	2320	Loading conveyor; Discharge conveyor	2107985
W 210 XP	2420	Loading conveyor; Discharge conveyor	2107985
W 215	1920	Loading conveyor; Discharge conveyor	2107985
W 2200	0821	Discharge conveyor; Loading conveyor	127761
W 220	0522	Discharge conveyor	138926
		Loading conveyor	127761
W 220i	0722	Loading conveyor	127761
		Discharge conveyor	138926
W 220 Fi	1122	Loading conveyor	127761

DRIVE ROLLERS			
Series code	Serial code	Conveyor type	Part no.
W 220 Fi	1122	Discharge conveyor	138926
W 250	0422	Discharge conveyor; Loading conveyor	127761
W 250i	0622	Discharge conveyor; Loading conveyor	127761
W 250 Fi	1322	Discharge conveyor; Loading conveyor	127761
2200 CR	0821	Discharge conveyor; Loading conveyor	127761
W 240 CR	03CR	Discharge conveyor; Loading conveyor	127761
W 240 CRi	04CR	Discharge conveyor; Loading conveyor	127761
W 380 CR	03CR	Discharge conveyor; Loading conveyor	127761
W 380 CRi	04CR	Discharge conveyor; Loading conveyor	127761
KMA 200	04MS	Dosing conveyor	138926
		Discharge conveyor	95865
KMA 220i	06MS	Dosing conveyor	138926
		Discharge conveyor	95865
KMA 220	05MS	Discharge conveyor	95865
		Dosing conveyor	138926
2200 SM	0821	Discharge conveyor; Loading conveyor	127761

CONVEYOR BELTS

Conveyor belts from WIRTGEN are known for their long service life, extremely smooth running, exceptional tear and tensile strength and conveying capacities of up to 1000 tonnes per hour.

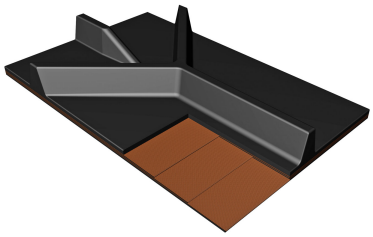

CONVEYOR BELTS						
Series code	Serial code	Version	Conveyor type	Conveyor length	Width	Part no.
W 35 DC	0403	hot-vulcanised	Discharge conveyor	long	250 mm	193070
		hot-vulcanised	Discharge conveyor	short	250 mm	182130

Original WIRTGEN

CONVEYOR UNIT

CONVEYOR BELTS						
Series code	Serial code	Version	Conveyor type	Conveyor length	Width	Part no.
W 35 Ri	0703	hot-vulcanised	Discharge conveyor	long	250 mm	193070
		hot-vulcanised	Discharge conveyor	short	250 mm	182130
W 35 XRi	0703	hot-vulcanised	Discharge conveyor	long	250 mm	193070
		hot-vulcanised	Discharge conveyor	short	250 mm	182130
W 500	0605	hot-vulcanised	Discharge conveyor	short	400 mm	71478
		hot-vulcanised	Discharge conveyor		400 mm	50002
W 50	0805, 1005	hot-vulcanised	Discharge conveyor	short	400 mm	71478
		hot-vulcanised	Discharge conveyor		400 mm	50002
W 50 DC	0905	hot-vulcanised	Discharge conveyor	short	400 mm	71478
		hot-vulcanised	Discharge conveyor		400 mm	50002
W 50 DCi	1205	hot-vulcanised	Discharge conveyor	short	400 mm	71478
		hot-vulcanised	Discharge conveyor		400 mm	50002
W 50 R	1405	hot-vulcanised	Discharge conveyor	short	350 mm	2323424
		hot-vulcanised	Discharge conveyor		350 mm	2279330
W 50 Ri	1505	hot-vulcanised	Discharge conveyor	short	350 mm	2323424
		hot-vulcanised	Discharge conveyor		350 mm	2279330
W 50 H	1305	hot-vulcanised	Discharge conveyor		400 mm	2185067
W 55 H	1305	hot-vulcanised	Discharge conveyor		400 mm	2185067
W 55 HR	1805	hot-vulcanised	Discharge conveyor		400 mm	2185067
		hot-vulcanised	Discharge conveyor	short	400 mm	2971708
W 60 R	1405	hot-vulcanised	Discharge conveyor	short	350 mm	2323424
		hot-vulcanised	Discharge conveyor		350 mm	2279330
W 60 Ri	1505	hot-vulcanised	Discharge conveyor	short	350 mm	2323424
		hot-vulcanised	Discharge conveyor		350 mm	2279330
W 60	0910	hot-vulcanised	Discharge conveyor		500 mm	71776
W 60i	1210	hot-vulcanised	Discharge conveyor		500 mm	71776
W 100	0910	hot-vulcanised	Discharge conveyor		500 mm	71776

CONVEYOR BELTS

Series code	Serial code	Version	Conveyor type	Conveyor length	Width	Part no.
W 100i	1210	hot-vulcanised	Discharge conveyor		500 mm	71776
W 100	1010	hot-vulcanised	Discharge conveyor		500 mm	71776
W 100 L	1010	hot-vulcanised	Discharge conveyor		500 mm	71776
W 100 H	1910	hot-vulcanised	Discharge conveyor		400 mm	50002
		hot-vulcanised	Discharge conveyor	long	400 mm	2327881
W 100	1110	hot-vulcanised	Discharge conveyor		500 mm	71776
W 100 R	1510	hot-vulcanised	Discharge conveyor	short	500 mm	2080936
		hot-vulcanised	Discharge conveyor		500 mm	71776
W 100 Ri	1610	hot-vulcanised	Discharge conveyor		500 mm	71776
		hot-vulcanised	Discharge conveyor	short	500 mm	2080936
W 100 H	1410	hot-vulcanised	Discharge conveyor		400 mm	50002
		hot-vulcanised	Discharge conveyor	long	400 mm	2327881
W 100 HR	2110	hot-vulcanised	Discharge conveyor		400 mm	50002
		hot-vulcanised	Discharge conveyor	long	400 mm	2327881
W 100 Fi	2710	hot-vulcanised	Discharge conveyor	short	600 mm	2899106
		hot-vulcanised	Discharge conveyor		600 mm	2431902
		hot-vulcanised	Loading conveyor		650 mm	2490307
W 120 R	1510	hot-vulcanised	Discharge conveyor		500 mm	71776
		hot-vulcanised	Discharge conveyor	short	500 mm	2080936
W 120 Ri	1610	hot-vulcanised	Discharge conveyor		500 mm	71776
		hot-vulcanised	Discharge conveyor	short	500 mm	2080936
W 130 H	1410, 1910	hot-vulcanised	Discharge conveyor		400 mm	50002
		hot-vulcanised	Discharge conveyor	long	400 mm	2327881
W 130 HR	2210	hot-vulcanised	Discharge conveyor		400 mm	50002
		hot-vulcanised	Discharge conveyor	long	400 mm	2327881
W 1000 F	0710	hot-vulcanised	Discharge conveyor		600 mm	51873
		hot-vulcanised	Loading conveyor		600 mm	125134

Original WIRTGEN

CONVEYOR UNIT

CONVEYOR BELTS						
Series code	Serial code	Version	Conveyor type	Conveyor length	Width	Part no.
W 100 F	0810	hot-vulcanised	Loading conveyor		650 mm	191410
		hot-vulcanised	Discharge conveyor		600 mm	51873
		hot-vulcanised	Discharge conveyor	short	600 mm	2068042
W 100 Fi	1310	hot-vulcanised	Discharge conveyor	short	600 mm	2068042
		hot-vulcanised	Discharge conveyor		600 mm	51873
		hot-vulcanised	Loading conveyor		650 mm	2173916
W 100 CFi	1810	hot-vulcanised	Discharge conveyor	short	600 mm	2068042
		hot-vulcanised	Discharge conveyor		600 mm	51873
		hot-vulcanised	Loading conveyor		650 mm	2490307
W 100 XFi	1810	hot-vulcanised	Discharge conveyor	short	600 mm	2068042
		hot-vulcanised	Discharge conveyor		600 mm	51873
		hot-vulcanised	Loading conveyor		650 mm	2490307
W 1200 F	0710	hot-vulcanised	Discharge conveyor		600 mm	51873
		hot-vulcanised	Loading conveyor		600 mm	125134
W 120 F	0810	hot-vulcanised	Loading conveyor		650 mm	191410
		hot-vulcanised	Discharge conveyor		600 mm	51873
		hot-vulcanised	Discharge conveyor	short	600 mm	2068042
W 120 Fi	1310	hot-vulcanised	Discharge conveyor	short	600 mm	2068042
		hot-vulcanised	Discharge conveyor		600 mm	51873
		hot-vulcanised	Loading conveyor		650 mm	2173916
W 120 CFi	1810	hot-vulcanised	Discharge conveyor	short	600 mm	2068042
		hot-vulcanised	Discharge conveyor		600 mm	51873
		hot-vulcanised	Loading conveyor		650 mm	2490307
W 120 XTi	1810	hot-vulcanised	Discharge conveyor	short	600 mm	2068042
		hot-vulcanised	Discharge conveyor		600 mm	51873
		hot-vulcanised	Loading conveyor		650 mm	2490307
W 120 XFi	1810	hot-vulcanised	Discharge conveyor	short	600 mm	2068042

CONVEYOR BELTS

Series code	Serial code	Version	Conveyor type	Conveyor length	Width	Part no.
W 120 XFi	1810	hot-vulcanised	Discharge conveyor		600 mm	51873
		hot-vulcanised	Loading conveyor		650 mm	2490307
W 120 Fi	2710	hot-vulcanised	Discharge conveyor	short	600 mm	2899106
		hot-vulcanised	Discharge conveyor		600 mm	2431902
		hot-vulcanised	Loading conveyor		650 mm	2490307
W 120 FTi	2710	hot-vulcanised	Discharge conveyor		600 mm	2431902
		hot-vulcanised	Loading conveyor		650 mm	2490307
		hot-vulcanised	Discharge conveyor	short	600 mm	2899106
W 1300 F	0710	hot-vulcanised	Discharge conveyor		600 mm	51873
		hot-vulcanised	Loading conveyor		600 mm	125134
W 130 F	0810	hot-vulcanised	Loading conveyor		650 mm	191410
		hot-vulcanised	Discharge conveyor		600 mm	51873
		hot-vulcanised	Discharge conveyor	short	600 mm	2068042
W 130 Fi	1310	hot-vulcanised	Discharge conveyor	short	600 mm	2068042
		hot-vulcanised	Discharge conveyor		600 mm	51873
		hot-vulcanised	Loading conveyor		650 mm	2173916
W 130 CFi	1810	hot-vulcanised	Discharge conveyor	short	600 mm	2068042
		hot-vulcanised	Discharge conveyor		600 mm	51873
		hot-vulcanised	Loading conveyor		650 mm	2490307
W 130 XFi	1810	hot-vulcanised	Discharge conveyor	short	600 mm	2068042
		hot-vulcanised	Discharge conveyor		600 mm	51873
		hot-vulcanised	Loading conveyor		650 mm	2490307
W 130 Fi	2710	hot-vulcanised	Discharge conveyor	short	600 mm	2899106
		hot-vulcanised	Discharge conveyor		600 mm	2431902
		hot-vulcanised	Loading conveyor		650 mm	2490307
W 1500	0820	hot-vulcanised	Discharge conveyor		800 mm	57482
		hot-vulcanised	Loading conveyor		800 mm	52890

Original WIRTGEN

CONVEYOR UNIT

CONVEYOR BELTS						
Series code	Serial code	Version	Conveyor type	Conveyor length	Width	Part no.
W 150	0513	hot-vulcanised	Discharge conveyor	short	600 mm	2068042
		hot-vulcanised	Discharge conveyor		600 mm	51873
		hot-vulcanised	Loading conveyor		650 mm	2075932
W 150i	0613	hot-vulcanised	Discharge conveyor	short	600 mm	2068042
		hot-vulcanised	Discharge conveyor		600 mm	51873
		hot-vulcanised	Loading conveyor		650 mm	2075932
W 150 CF	0713	hot-vulcanised	Discharge conveyor	short	600 mm	2068042
		hot-vulcanised	Discharge conveyor		600 mm	51873
		hot-vulcanised	Loading conveyor		650 mm	2431790
W 150 CFi	0813	hot-vulcanised	Discharge conveyor	short	600 mm	2068042
		hot-vulcanised	Loading conveyor		650 mm	2431790
		hot-vulcanised	Discharge conveyor		600 mm	51873
W 150 XFi	0813	hot-vulcanised	Loading conveyor		650 mm	2431790
		hot-vulcanised	Discharge conveyor	short	600 mm	2068042
		hot-vulcanised	Discharge conveyor		600 mm	51873
W 1900	0820, 0920	hot-vulcanised	Loading conveyor		800 mm	52890
		hot-vulcanised	Discharge conveyor		800 mm	57482
	1020	hot-vulcanised	Discharge conveyor		800 mm	57482
		hot-vulcanised	Loading conveyor		800 mm	52890
W 195	1820	hot-vulcanised	Loading conveyor		850 mm	2106093
		hot-vulcanised	Discharge conveyor		850 mm	2106086
W 2000	0620	hot-vulcanised	Discharge conveyor		800 mm	57482
		hot-vulcanised	Loading conveyor		800 mm	112781
	1120	hot-vulcanised	Loading conveyor		800 mm	112781
		hot-vulcanised	Discharge conveyor		800 mm	57482
W 200	1220	hot-vulcanised	Discharge conveyor		850 mm	2106086
		hot-vulcanised	Loading conveyor		850 mm	2106093

CONVEYOR BELTS

Series code	Serial code	Version	Conveyor type	Conveyor length	Width	Part no.
W 200i	1420	hot-vulcanised	Discharge conveyor		850 mm	2106086
		hot-vulcanised	Loading conveyor		850 mm	2106093
W 200 F	2020	hot-vulcanised	Loading conveyor		850 mm	2106093
		hot-vulcanised	Discharge conveyor		850 mm	2106086
W 200 Fi	2120	hot-vulcanised	Discharge conveyor		850 mm	2106086
		hot-vulcanised	Loading conveyor		850 mm	2106093
W 200 H	1620	hot-vulcanised	Discharge conveyor		850 mm	2106086
		hot-vulcanised	Loading conveyor		800 mm	2212374
		hot-vulcanised	Discharge conveyor		800 mm	2219593
W 200 Hi	1720	hot-vulcanised	Discharge conveyor		800 mm	2219593
		hot-vulcanised	Discharge conveyor		850 mm	2106086
		hot-vulcanised	Loading conveyor		800 mm	2212374
W 205	2520	hot-vulcanised	Discharge conveyor		850 mm	2106086
		hot-vulcanised	Loading conveyor		850 mm	2106093
W 207 Fi	2120	hot-vulcanised	Discharge conveyor		850 mm	2106086
		hot-vulcanised	Loading conveyor		850 mm	2106093
W 2100	0921	hot-vulcanised	Discharge conveyor		1000 mm	138316
		hot-vulcanised	Loading conveyor		1000 mm	53870
W 210	1320	hot-vulcanised	Discharge conveyor		850 mm	2106086
		hot-vulcanised	Loading conveyor		850 mm	2106093
W 210i	1520	hot-vulcanised	Loading conveyor		850 mm	2106093
		hot-vulcanised	Discharge conveyor		850 mm	2106086
W 210 Fi	2320	hot-vulcanised	Discharge conveyor		850 mm	2106086
		hot-vulcanised	Loading conveyor		850 mm	2106093
W 210 XP	2420	hot-vulcanised	Discharge conveyor		850 mm	2106086
		hot-vulcanised	Loading conveyor		850 mm	2106093
W 215	1920	hot-vulcanised	Loading conveyor		850 mm	2106093

Original WIRTGEN

CONVEYOR UNIT

CONVEYOR BELTS						
Series code	Serial code	Version	Conveyor type	Conveyor length	Width	Part no.
W 215	1920	hot-vulcanised	Discharge conveyor		850 mm	2106086
W 2200	0821	hot-vulcanised	Discharge conveyor		1100 mm	116578
		hot-vulcanised	Loading conveyor		1100 mm	116577
W 220	0522	hot-vulcanised	Discharge conveyor		1000 mm	2178711
		hot-vulcanised	Loading conveyor		1100 mm	2161723
W 220i	0722	hot-vulcanised	Loading conveyor		1100 mm	2161723
		hot-vulcanised	Discharge conveyor		1000 mm	2178711
W 220 Fi	1122	hot-vulcanised	Loading conveyor		1100 mm	2161723
		hot-vulcanised	Discharge conveyor		1000 mm	2178711
W 250	0422	hot-vulcanised	Loading conveyor		1100 mm	116577
		hot-vulcanised	Discharge conveyor		1100 mm	2147320
W 250i	0622	hot-vulcanised	Discharge conveyor		1100 mm	2147320
		hot-vulcanised	Loading conveyor		1100 mm	116577
W 250 Fi	1322	hot-vulcanised	Discharge conveyor		1100 mm	2147320
		hot-vulcanised	Loading conveyor		1100 mm	116577
2200 CR	0821	hot-vulcanised	Loading conveyor		1100 mm	116577
		hot-vulcanised	Discharge conveyor		1100 mm	116578
W 240 CR	03CR	hot-vulcanised	Loading conveyor		1100 mm	116577
		hot-vulcanised	Discharge conveyor		1100 mm	116578
W 240 CRi	04CR	hot-vulcanised	Loading conveyor		1100 mm	116577
		hot-vulcanised	Discharge conveyor		1100 mm	116578
W 380 CR	03CR	hot-vulcanised	Loading conveyor		1100 mm	116577
		hot-vulcanised	Discharge conveyor		1100 mm	116578
W 380 CRi	04CR	hot-vulcanised	Loading conveyor		1100 mm	116577
		hot-vulcanised	Discharge conveyor		1100 mm	116578
KMA 200	04MS	hot-vulcanised	Dosing conveyor		1000 mm	150748
		hot-vulcanised	Discharge conveyor		800 mm	8383

CONVEYOR BELTS						
Series code	Serial code	Version	Conveyor type	Conveyor length	Width	Part no.
2200 SM	0821	hot-vulcanised	Loading conveyor		1100 mm	116577
		hot-vulcanised	Discharge conveyor		1100 mm	116578

GUIDE ROLLERS

The side-mounted guide rollers prevent the conveyor belt from slipping sideways and, in conjunction with the other components, ensure the conveyor delivers optimum conveying capacity.

GUIDE ROLLERS									
Series code	Serial code	Conveyor type	Requirement: discharge conveyor, folding conveyor	Requirement: discharge conveyor, folding conveyor, short	Requirement: discharge conveyor, short	Requirement: discharge conveyor, long	Requirement: discharge conveyor, standard	Requirement: loading conveyor	Part no.
W 500	0605	Discharge conveyor					2 pc.		54954
W 50	0805, 1005	Discharge conveyor			2 pc.		2 pc.		54954
W 50 DC	0905	Discharge conveyor			2 pc.		2 pc.		54954
W 50 DCi	1205	Discharge conveyor			2 pc.		2 pc.		54954
W 50 R	1405	Discharge conveyor			2 pc.		2 pc.		54954
W 50 Ri	1505	Discharge conveyor			2 pc.		2 pc.		54954
W 50 H	1305	Discharge conveyor			2 pc.		2 pc.		54954
W 55 H	1305	Discharge conveyor			2 pc.		2 pc.		54954
W 55 HR	1805	Discharge conveyor			2 pc.	2 pc.			54954
W 60 R	1405	Discharge conveyor	2 pc.			2 pc.			54954
W 60 Ri	1505	Discharge conveyor	2 pc.			2 pc.			54954
W 60	0910	Discharge conveyor					4 pc.		54954
W 60i	1210	Discharge conveyor					4 pc.		54954

CONVEYOR UNIT

GUIDE ROLLERS

Series code	Serial code	Conveyor type	Requirement: discharge conveyor, folding conveyor	Requirement: discharge conveyor, folding conveyor, short	Requirement: discharge conveyor, short	Requirement: discharge conveyor, long	Requirement: discharge conveyor, standard	Requirement: loading conveyor	Part no.
W 100	0910	Discharge conveyor					4 pc.		54954
W 100i	1210	Discharge conveyor					4 pc.		54954
W 100	1010	Discharge conveyor					4 pc.		54954
W 100 L	1010	Discharge conveyor					4 pc.		54954
W 100 H	1910	Discharge conveyor	4 pc.				2 pc.		54954
W 100	1110	Discharge conveyor					4 pc.		54954
W 100 R	1510	Discharge conveyor			2 pc.	2 pc.	2 pc.		54954
W 100 Ri	1610	Discharge conveyor			2 pc.	2 pc.	2 pc.		54954
W 100 H	1410	Discharge conveyor	4 pc.				2 pc.		54954
W 100 HR	2110	Discharge conveyor	4 pc.				2 pc.		54954
W 100 Fi	2710	Discharge conveyor; Loading conveyor	2 pc.	2 pc.			2 pc.	2 pc.	54954
W 120 R	1510	Discharge conveyor			2 pc.	2 pc.	2 pc.		54954
W 120 Ri	1610	Discharge conveyor			2 pc.	2 pc.	2 pc.		54954
W 130 H	1410, 1910	Discharge conveyor	4 pc.				2 pc.		54954
W 130 HR	2210	Discharge conveyor	4 pc.				2 pc.		54954
W 1000 F	0710	Discharge conveyor; Loading conveyor					4 pc.	2 pc.	54954
W 100 F	0810	Discharge conveyor; Loading conveyor	4 pc.	4 pc.			4 pc.	2 pc.	54954
W 100 Fi	1310	Discharge conveyor; Loading conveyor	4 pc.	4 pc.			4 pc.	2 pc.	54954
W 100 CF	1710	Discharge conveyor; Loading conveyor	2 pc.	2 pc.			2 pc.	2 pc.	54954

GUIDE ROLLERS

Series code	Serial code	Conveyor type	Requirement: discharge conveyor, folding conveyor	Requirement: discharge conveyor, folding conveyor, short	Requirement: discharge conveyor, short	Requirement: discharge conveyor, long	Requirement: discharge conveyor, standard	Requirement: loading conveyor	Part no.
W 100 CFi	1810	Discharge conveyor; Loading conveyor	2 pc.	2 pc.			2 pc.	2 pc.	54954
W 100 XFi	1810	Discharge conveyor; Loading conveyor	2 pc.	2 pc.			2 pc.	2 pc.	54954
W 1200 F	0710	Discharge conveyor; Loading conveyor					4 pc.	2 pc.	54954
W 120 F	0810	Discharge conveyor; Loading conveyor	4 pc.	4 pc.			4 pc.	2 pc.	54954
W 120 Fi	1310	Discharge conveyor; Loading conveyor	4 pc.	4 pc.			4 pc.	2 pc.	54954
W 120 CF	1710	Discharge conveyor; Loading conveyor	2 pc.	2 pc.			2 pc.	2 pc.	54954
W 120 CFi	1810	Discharge conveyor; Loading conveyor	2 pc.	2 pc.			2 pc.	2 pc.	54954
W 120 XTi	1810	Discharge conveyor; Loading conveyor	2 pc.	2 pc.			2 pc.	2 pc.	54954
W 120 XFi	1810	Discharge conveyor; Loading conveyor	2 pc.	2 pc.			2 pc.	2 pc.	54954
W 120 Fi	2710	Discharge conveyor; Loading conveyor	2 pc.	2 pc.			2 pc.	2 pc.	54954
W 120 FTi	2710	Discharge conveyor; Loading conveyor	2 pc.	2 pc.			2 pc.	2 pc.	54954
W 1300 F	0710	Discharge conveyor; Loading conveyor					4 pc.	2 pc.	54954

CONVEYOR UNIT

GUIDE ROLLERS

Series code	Serial code	Conveyor type	Requirement: discharge conveyor, folding conveyor	Requirement: discharge conveyor, folding conveyor, short	Requirement: discharge conveyor, short	Requirement: discharge conveyor, long	Requirement: discharge conveyor, standard	Requirement: loading conveyor	Part no.
W 130 F	0810	Discharge conveyor; Loading conveyor	4 pc.	4 pc.			4 pc.	2 pc.	54954
W 130 Fi	1310	Discharge conveyor; Loading conveyor	4 pc.	4 pc.			4 pc.	2 pc.	54954
W 130 CF	1710	Discharge conveyor; Loading conveyor	2 pc.	2 pc.			2 pc.	2 pc.	54954
W 130 CFi	1810	Discharge conveyor; Loading conveyor	2 pc.	2 pc.			2 pc.	2 pc.	54954
W 130 XFi	1810	Discharge conveyor; Loading conveyor	2 pc.	2 pc.			2 pc.	2 pc.	54954
W 130 Fi	2710	Discharge conveyor; Loading conveyor	2 pc.	2 pc.			2 pc.	2 pc.	54954
W 1500	0820	Discharge conveyor; Loading conveyor	4 pc.				4 pc.	2 pc.	54954
W 150	0513	Discharge conveyor; Loading conveyor	4 pc.	4 pc.			4 pc.	2 pc.	54954
W 150i	0613	Discharge conveyor; Loading conveyor	4 pc.	4 pc.			4 pc.	2 pc.	54954
W 150 CF	0713	Discharge conveyor; Loading conveyor	2 pc.	2 pc.			2 pc.	2 pc.	54954
W 150 CFi	0813	Discharge conveyor; Loading conveyor	2 pc.	2 pc.			2 pc.	2 pc.	54954
W 150 XFi	0813	Discharge conveyor; Loading conveyor	2 pc.	2 pc.			2 pc.	2 pc.	54954

GUIDE ROLLERS

Series code	Serial code	Conveyor type	Requirement: discharge conveyor, folding conveyor	Requirement: discharge conveyor, folding conveyor, short	Requirement: discharge conveyor, short	Requirement: discharge conveyor, long	Requirement: discharge conveyor, standard	Requirement: loading conveyor	Part no.
W 1900	0820, 0920, 1020	Discharge conveyor; Loading conveyor	4 pc.				4 pc.	2 pc.	54954
W 195	1820	Discharge conveyor; Loading conveyor	4 pc.				4 pc.	2 pc.	54954
W 2000	0620, 1120	Discharge conveyor; Loading conveyor	4 pc.				4 pc.	4 pc.	54954
W 200	1220	Discharge conveyor; Loading conveyor	4 pc.				4 pc.	2 pc.	54954
W 200i	1420	Discharge conveyor; Loading conveyor	4 pc.				4 pc.	2 pc.	54954
W 200 F	2020	Discharge conveyor; Loading conveyor	4 pc.				4 pc.	2 pc.	54954
W 200 Fi	2120	Discharge conveyor; Loading conveyor	4 pc.				4 pc.	2 pc.	54954
W 200 H	1620	Discharge conveyor; Loading conveyor	4 pc.				4 pc.	2 pc.	54954
W 200 Hi	1720	Discharge conveyor; Loading conveyor	4 pc.				4 pc.	2 pc.	54954
W 205	2520	Discharge conveyor; Loading conveyor	4 pc.				4 pc.	2 pc.	54954
W 207 Fi	2120	Discharge conveyor; Loading conveyor	4 pc.				4 pc.	2 pc.	54954
W 2100	0921	Discharge conveyor; Loading conveyor	4 pc.				4 pc.	4 pc.	54954

GUIDE ROLLERS

Series code	Serial code	Conveyor type	Requirement: discharge conveyor, folding conveyor	Requirement: discharge conveyor, folding conveyor, short	Requirement: discharge conveyor, short	Requirement: discharge conveyor, long	Requirement: discharge conveyor, standard	Requirement: loading conveyor	Part no.
W 210	1320	Discharge conveyor; Loading conveyor	4 pc.				4 pc.	2 pc.	54954
W 210i	1520	Discharge conveyor; Loading conveyor	4 pc.				4 pc.	2 pc.	54954
W 210 Fi	2320	Discharge conveyor; Loading conveyor	4 pc.				4 pc.	2 pc.	54954
W 210 XP	2420	Discharge conveyor; Loading conveyor	4 pc.				4 pc.	2 pc.	54954
W 215	1920	Discharge conveyor; Loading conveyor	4 pc.				4 pc.	2 pc.	54954
W 2200	0821	Discharge conveyor	4 pc.				4 pc.		54954
W 220	0522	Discharge conveyor; Loading conveyor	4 pc.				4 pc.	2 pc.	54954
W 220i	0722	Discharge conveyor; Loading conveyor	4 pc.				4 pc.	2 pc.	54954
W 220 Fi	1122	Discharge conveyor; Loading conveyor	4 pc.				4 pc.	2 pc.	54954
W 250	0422	Discharge conveyor; Loading conveyor	4 pc.				4 pc.	2 pc.	54954
W 250i	0622	Discharge conveyor; Loading conveyor	4 pc.				4 pc.	2 pc.	54954
W 250 Fi	1322	Discharge conveyor; Loading conveyor	4 pc.				4 pc.	2 pc.	54954
2200 CR	0821	Discharge conveyor	4 pc.				4 pc.		54954

GUIDE ROLLERS

Series code	Serial code	Conveyor type	Requirement: discharge conveyor, folding conveyor	Requirement: discharge conveyor, folding conveyor, short	Requirement: discharge conveyor, short	Requirement: discharge conveyor, long	Requirement: discharge conveyor, standard	Requirement: loading conveyor	Part no.
W 240 CR	03CR	Discharge conveyor; Loading conveyor	4 pc.					2 pc.	54954
W 240 CRi	04CR	Discharge conveyor; Loading conveyor	4 pc.					2 pc.	54954
W 380 CR	03CR	Discharge conveyor; Loading conveyor	4 pc.					2 pc.	54954
W 380 CRi	04CR	Discharge conveyor; Loading conveyor	4 pc.					2 pc.	54954
KMA 200	04MS	Discharge conveyor; Loading conveyor	2 pc.					4 pc.	54954
2200 SM	0821	Discharge conveyor	4 pc.				4 pc.		54954

Original WIRTGEN

CONVEYOR UNIT

IDLER ROLLERS

Genuine WIRTGEN idler rollers are located inside the conveyor unit where they support the weight of the milled material.

IDLER ROLLERS										
Series code	Serial code	Conveyor type	Requirement: discharge conveyor, folding conveyor	Requirement: discharge conveyor, folding conveyor, short	Requirement: discharge conveyor, short	Requirement: discharge conveyor, long	Requirement: discharge conveyor, standard	Requirement: loading conveyor	Width	Part no.
W 50	0805, 1005	Discharge conveyor					9 pc.			171832
W 50 DC	0905	Discharge conveyor					9 pc.			171832
W 50 DCi	1205	Discharge conveyor					9 pc.			171832
W 50 R	1405	Discharge conveyor			4 pc.		9 pc.			2279085
W 50 Ri	1505	Discharge conveyor			4 pc.		9 pc.			2279085
W 50 H	1305	Discharge conveyor					8 pc.			171832
W 55 H	1305	Discharge conveyor					8 pc.			171832
W 55 HR	1805	Discharge conveyor			4 pc.	8 pc.			400 mm	171832

IDLER ROLLERS

Series code	Serial code	Conveyor type	Requirement: discharge conveyor, folding conveyor	Requirement: discharge conveyor, folding conveyor, short	Requirement: discharge conveyor, short	Requirement: discharge conveyor, long	Requirement: discharge conveyor, standard	Requirement: loading conveyor	Width	Part no.
W 60 R	1405	Discharge conveyor	9 pc.		4 pc.	9 pc.			350 mm	2279085
W 60 Ri	1505	Discharge conveyor	9 pc.		4 pc.	9 pc.			350 mm	2279085
W 60	0910	Discharge conveyor					4 pc.			72068
		Discharge conveyor					7 pc.			71777
W 60i	1210	Discharge conveyor					4 pc.			72068
		Discharge conveyor					7 pc.			71777
W 100	0910	Discharge conveyor					4 pc.			72068
		Discharge conveyor					7 pc.			71777
W 100i	1210	Discharge conveyor					4 pc.			72068
		Discharge conveyor					7 pc.			71777
W 100	1010	Discharge conveyor					4 pc.			72068

CONVEYOR UNIT

IDLER ROLLERS										
Series code	Serial code	Conveyor type	Requirement: discharge conveyor, folding conveyor	Requirement: discharge conveyor, folding conveyor, short	Requirement: discharge conveyor, short	Requirement: discharge conveyor, long	Requirement: discharge conveyor, standard	Requirement: loading conveyor	Width	Part no.
W 100	1010	Discharge conveyor					7 pc.			71777
W 100 L	1010	Discharge conveyor					4 pc.			72068
		Discharge conveyor					7 pc.			71777
W 100 H	1910	Discharge conveyor	11 pc.				8 pc.			171832
W 100	1110	Discharge conveyor					4 pc.			72068
		Discharge conveyor					7 pc.			71777
W 100 R	1510	Discharge conveyor			4 pc.	4 pc.	4 pc.			72068
		Discharge conveyor			6 pc.	7 pc.	7 pc.			71777
W 100 Ri	1610	Discharge conveyor			4 pc.	4 pc.	4 pc.			72068
		Discharge conveyor			6 pc.	7 pc.	7 pc.			71777
W 100 H	1410	Discharge conveyor	11 pc.				8 pc.			171832

IDLER ROLLERS

Series code	Serial code	Conveyor type	Requirement: discharge conveyor, folding conveyor	Requirement: discharge conveyor, folding conveyor, short	Requirement: discharge conveyor, short	Requirement: discharge conveyor, long	Requirement: discharge conveyor, standard	Requirement: loading conveyor	Width	Part no.
W 100 HR	2110	Discharge conveyor	11 pc.				8 pc.			171832
W 100 Fi	2710	Loading conveyor						6 pc.	650 mm	190448
		Discharge conveyor	7 pc.	6 pc.			7 pc.		600 mm	90122
		Discharge conveyor	4 pc.	4 pc.			4 pc.		600 mm	2790789
W 120 R	1510	Discharge conveyor			4 pc.	4 pc.	4 pc.			72068
		Discharge conveyor			6 pc.	7 pc.	7 pc.			71777
W 120 Ri	1610	Discharge conveyor			4 pc.	4 pc.	4 pc.			72068
		Discharge conveyor			6 pc.	7 pc.	7 pc.			71777
W 130 H	1410, 1910	Discharge conveyor	11 pc.				8 pc.			171832
W 130 HR	2210	Discharge conveyor	11 pc.				8 pc.			171832
W 1000 F	0710	Discharge conveyor					7 pc.			90122

Original WIRTGEN

CONVEYOR UNIT

IDLER ROLLERS										
Series code	Serial code	Conveyor type	Requirement: discharge conveyor, folding conveyor	Requirement: discharge conveyor, folding conveyor, short	Requirement: discharge conveyor, short	Requirement: discharge conveyor, long	Requirement: discharge conveyor, standard	Requirement: loading conveyor	Width	Part no.
W 1000 F	0710	Discharge conveyor; Loading conveyor					4 pc.	6 pc.		90120
W 100 F	0810	Loading conveyor						6 pc.	650 mm	190448
		Discharge conveyor	7 pc.	6 pc.			7 pc.		600 mm	90122
		Discharge conveyor	4 pc.	4 pc.			4 pc.		600 mm	90120
W 100 Fi	1310	Loading conveyor						6 pc.	650 mm	190448
		Discharge conveyor	7 pc.	6 pc.			7 pc.		600 mm	90122
		Discharge conveyor	4 pc.	4 pc.			4 pc.		600 mm	90120
W 100 CF	1710	Discharge conveyor	7 pc.	6 pc.			7 pc.		600 mm	90122
		Discharge conveyor	4 pc.	4 pc.			4 pc.		600 mm	90120
		Loading conveyor						6 pc.	650 mm	190448
W 100 CFi	1810	Loading conveyor						6 pc.	650 mm	190448
		Discharge conveyor	7 pc.	6 pc.			7 pc.		600 mm	90122
		Discharge conveyor	4 pc.	4 pc.			4 pc.		600 mm	90120

IDLER ROLLERS

Series code	Serial code	Conveyor type	Requirement: discharge conveyor, folding conveyor	Requirement: discharge conveyor, folding conveyor, short	Requirement: discharge conveyor, short	Requirement: discharge conveyor, long	Requirement: discharge conveyor, standard	Requirement: loading conveyor	Width	Part no.
W 100 XFi	1810	Loading conveyor						6 pc.	650 mm	190448
		Discharge conveyor	7 pc.	6 pc.			7 pc.		600 mm	90122
		Discharge conveyor	4 pc.	4 pc.			4 pc.		600 mm	90120
W 1200 F	0710	Discharge conveyor					7 pc.			90122
		Discharge conveyor; Loading conveyor					4 pc.	6 pc.		90120
W 120 F	0810	Loading conveyor						6 pc.	650 mm	190448
		Discharge conveyor	7 pc.	6 pc.			7 pc.		600 mm	90122
		Discharge conveyor	4 pc.	4 pc.			4 pc.		600 mm	90120
W 120 Fi	1310	Loading conveyor						6 pc.	650 mm	190448
		Discharge conveyor	7 pc.	6 pc.			7 pc.		600 mm	90122
		Discharge conveyor	4 pc.	4 pc.			4 pc.		600 mm	90120
W 120 CF	1710	Loading conveyor						6 pc.	650 mm	190448
		Discharge conveyor	7 pc.	6 pc.			7 pc.		600 mm	90122

Original WIRTGEN

CONVEYOR UNIT

IDLER ROLLERS										
Series code	Serial code	Conveyor type	Requirement: discharge conveyor, folding conveyor	Requirement: discharge conveyor, folding conveyor, short	Requirement: discharge conveyor, short	Requirement: discharge conveyor, long	Requirement: discharge conveyor, standard	Requirement: loading conveyor	Width	Part no.
W 120 CF	1710	Discharge conveyor	4 pc.	4 pc.			4 pc.		600 mm	90120
W 120 CFi	1810	Loading conveyor						6 pc.	650 mm	190448
		Discharge conveyor	7 pc.	6 pc.			7 pc.		600 mm	90122
		Discharge conveyor	4 pc.	4 pc.			4 pc.		600 mm	90120
W 120 XTi	1810	Loading conveyor						6 pc.	650 mm	190448
		Discharge conveyor	7 pc.	6 pc.			7 pc.		600 mm	90122
		Discharge conveyor	4 pc.	4 pc.			4 pc.		600 mm	90120
W 120 XFi	1810	Loading conveyor						6 pc.	650 mm	190448
		Discharge conveyor	7 pc.	6 pc.			7 pc.		600 mm	90122
		Discharge conveyor	4 pc.	4 pc.			4 pc.		600 mm	90120
W 120 Fi	2710	Loading conveyor						6 pc.	650 mm	190448
		Discharge conveyor	7 pc.	6 pc.			7 pc.		600 mm	90122
		Discharge conveyor	4 pc.	4 pc.			4 pc.		600 mm	2790789
W 120 FTi	2710	Loading conveyor						6 pc.	650 mm	190448

IDLER ROLLERS

Series code	Serial code	Conveyor type	Requirement: discharge conveyor, folding conveyor	Requirement: discharge conveyor, folding conveyor, short	Requirement: discharge conveyor, short	Requirement: discharge conveyor, long	Requirement: discharge conveyor, standard	Requirement: loading conveyor	Width	Part no.
W 120 FTi	2710	Loading conveyor	7 pc.	6 pc.			7 pc.		600 mm	90122
		Discharge conveyor	4 pc.	4 pc.			4 pc.		600 mm	2790789
W 1300 F	0710	Discharge conveyor					7 pc.			90122
		Discharge conveyor; Loading conveyor					4 pc.	6 pc.		90120
W 130 F	0810	Loading conveyor						6 pc.	650 mm	190448
		Discharge conveyor	7 pc.	6 pc.			7 pc.		600 mm	90122
		Discharge conveyor	4 pc.	4 pc.			4 pc.		600 mm	90120
W 130 Fi	1310	Loading conveyor						6 pc.	650 mm	190448
		Discharge conveyor	7 pc.	6 pc.			7 pc.		600 mm	90122
		Discharge conveyor	4 pc.	4 pc.			4 pc.		600 mm	90120
W 130 CF	1710	Loading conveyor						6 pc.	650 mm	190448
		Discharge conveyor	4 pc.	4 pc.			4 pc.		600 mm	90120
		Discharge conveyor	7 pc.	6 pc.			7 pc.		600 mm	90122

Original WIRTGEN

CONVEYOR UNIT

IDLER ROLLERS										
Series code	Serial code	Conveyor type	Requirement: discharge conveyor, folding conveyor	Requirement: discharge conveyor, folding conveyor, short	Requirement: discharge conveyor, short	Requirement: discharge conveyor, long	Requirement: discharge conveyor, standard	Requirement: loading conveyor	Width	Part no.
W 130 CFi	1810	Loading conveyor						6 pc.	650 mm	190448
		Discharge conveyor	4 pc.	4 pc.			4 pc.		600 mm	90120
		Discharge conveyor	7 pc.	6 pc.			7 pc.		600 mm	90122
W 130 XFi	1810	Discharge conveyor	7 pc.	6 pc.			7 pc.		600 mm	90122
		Discharge conveyor	4 pc.	4 pc.			4 pc.		600 mm	90120
		Loading conveyor						6 pc.	650 mm	190448
W 130 Fi	2710	Discharge conveyor	4 pc.	4 pc.			4 pc.		600 mm	2790789
		Discharge conveyor	7 pc.	6 pc.			7 pc.		600 mm	90122
		Loading conveyor						6 pc.	650 mm	190448
W 1500	0820	Discharge conveyor	11 pc.				10 pc.			111363
		Loading conveyor						4 pc.		65967
W 150	0513	Loading conveyor						4 pc.	650 mm	190448
		Discharge conveyor	7 pc.	6 pc.			7 pc.		600 mm	90122
		Discharge conveyor	4 pc.	4 pc.			4 pc.		600 mm	90120

IDLER ROLLERS

Series code	Serial code	Conveyor type	Requirement: discharge conveyor, folding conveyor	Requirement: discharge conveyor, folding conveyor, short	Requirement: discharge conveyor, short	Requirement: discharge conveyor, long	Requirement: discharge conveyor, standard	Requirement: loading conveyor	Width	Part no.
W 150i	0613	Discharge conveyor	4 pc.	4 pc.			4 pc.		600 mm	90120
		Loading conveyor						4 pc.	650 mm	190448
		Discharge conveyor	7 pc.	6 pc.			7 pc.		600 mm	90122
W 150 CF	0713	Discharge conveyor	4 pc.	4 pc.			4 pc.		600 mm	90120
		Discharge conveyor	7 pc.	6 pc.			7 pc.		600 mm	90122
		Loading conveyor						4 pc.	650 mm	190448
W 150 CFi	0813	Discharge conveyor	7 pc.	6 pc.			7 pc.		600 mm	90122
		Loading conveyor						8 pc.	650 mm	190448
		Discharge conveyor	4 pc.	4 pc.			4 pc.		600 mm	90120
W 150 XFi	0813	Discharge conveyor	4 pc.	4 pc.			4 pc.		600 mm	90120
		Loading conveyor						8 pc.	650 mm	190448
		Discharge conveyor	7 pc.	6 pc.			7 pc.		600 mm	90122
W 1900	0820	Loading conveyor						4 pc.		65967
		Discharge conveyor	11 pc.				10 pc.			111363

CONVEYOR UNIT

IDLER ROLLERS										
Series code	Serial code	Conveyor type	Requirement: discharge conveyor, folding conveyor	Requirement: discharge conveyor, folding conveyor, short	Requirement: discharge conveyor, short	Requirement: discharge conveyor, long	Requirement: discharge conveyor, standard	Requirement: loading conveyor	Width	Part no.
W 1900	0920	Discharge conveyor	11 pc.				10 pc.			111363
		Loading conveyor						4 pc.		65967
	1020	Loading conveyor						4 pc.		65967
		Discharge conveyor	11 pc.				10 pc.			111363
W 195	1820	Discharge conveyor; Loading conveyor	10 pc.				10 pc.	5 pc.		2091189
W 2000	0620, 1120	Discharge conveyor; Loading conveyor			11 pc.		10 pc.	5 pc.		111363
W 200	1220	Discharge conveyor; Loading conveyor	10 pc.				10 pc.	5 pc.		2091189
W 200i	1420	Discharge conveyor; Loading conveyor	10 pc.				10 pc.	5 pc.		2091189
W 200 F	2020	Discharge conveyor; Loading conveyor	10 pc.				10 pc.	5 pc.		2091189

IDLER ROLLERS

Series code	Serial code	Conveyor type	Requirement: discharge conveyor, folding conveyor	Requirement: discharge conveyor, folding conveyor, short	Requirement: discharge conveyor, short	Requirement: discharge conveyor, long	Requirement: discharge conveyor, standard	Requirement: loading conveyor	Width	Part no.
W 200 Fi	2120	Discharge conveyor; Loading conveyor	10 pc.				10 pc.	5 pc.		2091189
W 200 H	1620	Discharge conveyor	10 pc.						850 mm	2091189
		Discharge conveyor; Loading conveyor	7 pc.					5 pc.	800 mm	111363
W 200 Hi	1720	Discharge conveyor; Loading conveyor	7 pc.					5 pc.	800 mm	111363
		Discharge conveyor	10 pc.						850 mm	2091189
W 205	2520	Discharge conveyor; Loading conveyor	10 pc.				10 pc.	5 pc.		2091189
W 207 Fi	2120	Discharge conveyor; Loading conveyor	10 pc.				10 pc.	5 pc.		2091189
W 2100	0921	Discharge conveyor; Loading conveyor	11 pc.				10 pc.	5 pc.		138312

Original WIRTGEN

CONVEYOR UNIT

IDLER ROLLERS										
Series code	Serial code	Conveyor type	Requirement: discharge conveyor, folding conveyor	Requirement: discharge conveyor, folding conveyor, short	Requirement: discharge conveyor, short	Requirement: discharge conveyor, long	Requirement: discharge conveyor, standard	Requirement: loading conveyor	Width	Part no.
W 210	1320	Discharge conveyor; Loading conveyor	10 pc.				10 pc.	5 pc.		2091189
W 210i	1520	Discharge conveyor; Loading conveyor	10 pc.				10 pc.	5 pc.		2091189
W 210 Fi	2320	Discharge conveyor; Loading conveyor	10 pc.				10 pc.	5 pc.		2091189
W 210 XP	2420	Discharge conveyor; Loading conveyor	10 pc.				10 pc.	5 pc.		2091189
W 215	1920	Discharge conveyor; Loading conveyor	10 pc.				10 pc.	5 pc.		2091189
W 2200	0821	Discharge conveyor; Loading conveyor	11 pc.				10 pc.	6 pc.		116524
W 220	0522	Loading conveyor						6 pc.	1100 mm	116524
		Discharge conveyor	9 pc.				10 pc.		1000 mm	138312
W 220i	0722	Discharge conveyor	9 pc.				10 pc.		1000 mm	138312

IDLER ROLLERS

Series code	Serial code	Conveyor type	Requirement: discharge conveyor, folding conveyor	Requirement: discharge conveyor, folding conveyor, short	Requirement: discharge conveyor, short	Requirement: discharge conveyor, long	Requirement: discharge conveyor, standard	Requirement: loading conveyor	Width	Part no.
W 220i	0722	Loading conveyor						6 pc.	1100 mm	116524
W 220 Fi	1122	Loading conveyor						6 pc.	1100 mm	116524
		Discharge conveyor	9 pc.				10 pc.		1000 mm	138312
W 250	0422	Discharge conveyor; Loading conveyor	10 pc.				10 pc.	6 pc.		116524
W 250i	0622	Discharge conveyor; Loading conveyor	10 pc.				10 pc.	6 pc.		116524
W 250 Fi	1322	Discharge conveyor; Loading conveyor	10 pc.				10 pc.	6 pc.		116524
2200 CR	0821	Discharge conveyor; Loading conveyor	11 pc.				10 pc.	6 pc.		116524
W 240 CR	03CR	Discharge conveyor; Loading conveyor	10 pc.					6 pc.		116524
W 240 CRi	04CR	Discharge conveyor; Loading conveyor	10 pc.					6 pc.		116524

Original WIRTGEN

CONVEYOR UNIT

IDLER ROLLERS

Series code	Serial code	Conveyor type	Requirement: discharge conveyor, folding conveyor	Requirement: discharge conveyor, folding conveyor, short	Requirement: discharge conveyor, short	Requirement: discharge conveyor, long	Requirement: discharge conveyor, standard	Requirement: loading conveyor	Width	Part no.
W 380 CR	03CR	Discharge conveyor; Loading conveyor	10 pc.					6 pc.		116524
W 380 CRi	04CR	Discharge conveyor; Loading conveyor	10 pc.					6 pc.		116524
KMA 220	05MS	Discharge conveyor	7 pc.							65967
2200 SM	0821	Discharge conveyor; Loading conveyor	11 pc.				10 pc.	6 pc.		116524

RETURN ROLLERS

The return rollers made of a high-quality steel alloy keep the conveyor running smoothly and ensure it has a long service life. In addition, the curved outer contour ensures that the belt remains precisely centred.

RETURN ROLLERS

Series code	Serial code	Conveyor type	Part no.
W 35 DC	0403	Discharge conveyor	182519
W 35 Ri	0703	Discharge conveyor	182519
W 35 XRi	0703	Discharge conveyor	182519

RETURN ROLLERS			
Series code	Serial code	Conveyor type	Part no.
W 500	0605	Discharge conveyor	7654
W 50	0805, 1005	Discharge conveyor	7654
W 50 DC	0905	Discharge conveyor	7654
W 50 DCi	1205	Discharge conveyor	7654
W 50 R	1405	Discharge conveyor	2279219
W 50 Ri	1505	Discharge conveyor	2279219
W 50 H	1305	Discharge conveyor	7654
W 55 H	1305	Discharge conveyor	7654
W 55 HR	1805	Discharge conveyor	7654
W 60 R	1405	Discharge conveyor	2279219
W 60 Ri	1505	Discharge conveyor	2279219
W 60	0910	Discharge conveyor	72060
W 60i	1210	Discharge conveyor	72060
W 100	0910	Discharge conveyor	72060
W 100i	1210	Discharge conveyor	72060
W 100	1010	Discharge conveyor	72060
W 100 L	1010	Discharge conveyor	72060
W 100 H	1910	Discharge conveyor	7654
W 100	1110	Discharge conveyor	72060
W 100 R	1510	Discharge conveyor	72060
W 100 Ri	1610	Discharge conveyor	72060
W 100 H	1410	Discharge conveyor	7654
W 100 HR	2110	Discharge conveyor	7654
W 100 Fi	2710	Loading conveyor; Discharge conveyor	2853051
W 120 R	1510	Discharge conveyor	72060
W 120 Ri	1610	Discharge conveyor	72060
W 130 H	1410, 1910	Discharge conveyor	7654

CONVEYOR UNIT

RETURN ROLLERS			
Series code	Serial code	Conveyor type	Part no.
W 130 HR	2210	Discharge conveyor	7654
W 1000 F	0710	Loading conveyor; Discharge conveyor	90059
W 100 F	0810	Discharge conveyor	90059
		Loading conveyor	190357
W 100 Fi	1310	Loading conveyor	190357
		Discharge conveyor	90059
W 100 CF	1710	Discharge conveyor	90059
		Loading conveyor	190357
W 100 CFi	1810	Discharge conveyor	90059
		Loading conveyor	190357
W 100 XFi	1810	Discharge conveyor	90059
		Loading conveyor	190357
W 1200 F	0710	Loading conveyor; Discharge conveyor	90059
W 120 F	0810	Loading conveyor	190357
		Discharge conveyor	90059
W 120 Fi	1310	Discharge conveyor	90059
		Loading conveyor	190357
W 120 CF	1710	Discharge conveyor	90059
		Loading conveyor	190357
W 120 CFi	1810	Loading conveyor	190357
		Discharge conveyor	90059
W 120 XTi	1810	Loading conveyor	190357
		Discharge conveyor	90059
W 120 XFi	1810	Loading conveyor	190357
		Discharge conveyor	90059
W 120 Fi	2710	Loading conveyor; Discharge conveyor	2853051
W 120 FTi	2710	Loading conveyor; Discharge conveyor	2853051

RETURN ROLLERS			
Series code	Serial code	Conveyor type	Part no.
W 1300 F	0710	Loading conveyor; Discharge conveyor	90059
W 130 F	0810	Loading conveyor	190357
		Discharge conveyor	90059
W 130 Fi	1310	Loading conveyor	190357
		Discharge conveyor	90059
W 130 CF	1710	Loading conveyor	190357
		Discharge conveyor	90059
W 130 CFi	1810	Loading conveyor	190357
		Discharge conveyor	90059
W 130 XFi	1810	Loading conveyor	190357
		Discharge conveyor	90059
W 130 Fi	2710	Loading conveyor; Discharge conveyor	2853051
W 1500	0820	Discharge conveyor	110871
		Loading conveyor	52666
W 150	0513	Loading conveyor	190357
		Discharge conveyor	90059
W 150i	0613	Discharge conveyor	90059
		Loading conveyor	190357
W 150 CF	0713	Loading conveyor	2431175
		Discharge conveyor	90059
W 150 CFi	0813	Discharge conveyor	90059
		Loading conveyor	2431175
W 150 XFi	0813	Loading conveyor	2431175
		Discharge conveyor	90059
W 1900	0820, 0920	Loading conveyor	52666
		Discharge conveyor	110871
	1020	Discharge conveyor	110871

CONVEYOR UNIT

RETURN ROLLERS			
Series code	Serial code	Conveyor type	Part no.
W 1900	1020	Loading conveyor	52666
W 195	1820	Discharge conveyor; Loading conveyor	2105093
W 2000	0620, 1120	Discharge conveyor; Loading conveyor	110871
W 200	1220	Discharge conveyor; Loading conveyor	2105093
W 200i	1420	Discharge conveyor; Loading conveyor	2105093
W 200 F	2020	Discharge conveyor; Loading conveyor	2607590
W 200 Fi	2120	Discharge conveyor; Loading conveyor	2607590
W 200 H	1620	Discharge conveyor	2105093
		Discharge conveyor; Loading conveyor	2203028
W 200 Hi	1720	Discharge conveyor	2105093
		Loading conveyor; Discharge conveyor	2203028
W 205	2520	Discharge conveyor; Loading conveyor	2105093
W 207 Fi	2120	Discharge conveyor; Loading conveyor	2607590
W 2100	0921	Discharge conveyor; Loading conveyor	128671
W 210	1320	Discharge conveyor; Loading conveyor	2105093
W 210i	1520	Discharge conveyor; Loading conveyor	2105093
W 210 Fi	2320	Discharge conveyor; Loading conveyor	2607590
W 210 XP	2420	Discharge conveyor; Loading conveyor	2105093
W 215	1920	Discharge conveyor; Loading conveyor	2105093
W 2200	0821	Loading conveyor; Discharge conveyor	111225
W 220	0522	Discharge conveyor	2178746
		Loading conveyor	2141645
W 220i	0722	Loading conveyor	2141645
		Discharge conveyor	2178746
W 220 Fi	1122	Discharge conveyor	2178746
		Loading conveyor	2141645
W 250	0422	Loading conveyor; Discharge conveyor	2141645

RETURN ROLLERS			
Series code	Serial code	Conveyor type	Part no.
W 250i	0622	Loading conveyor; Discharge conveyor	2141645
W 250 Fi	1322	Loading conveyor; Discharge conveyor	2141645
2200 CR	0821	Loading conveyor; Discharge conveyor	111225
W 240 CR	03CR	Loading conveyor; Discharge conveyor	2141645
W 240 CRi	04CR	Loading conveyor; Discharge conveyor	2141645
W 380 CR	03CR	Loading conveyor; Discharge conveyor	2141645
W 380 CRi	04CR	Loading conveyor; Discharge conveyor	2141645
KMA 200	04MS	Dosing conveyor	154282
		Discharge conveyor	110871
KMA 220i	06MS	Discharge conveyor	110871
		Dosing conveyor	154282
KMA 220	05MS	Discharge conveyor	110871
		Dosing conveyor	154282
2200 SM	0821	Loading conveyor; Discharge conveyor	111225

Original WIRTGEN

CONVEYOR UNIT

RETURN ROLLERS

Highly wear-resistant return rollers made of a special polyurethane compound with low abrasion reliably support the belt during its return.

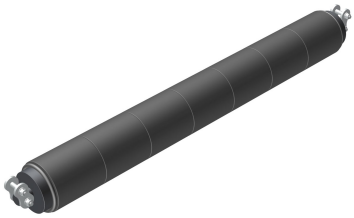

RETURN ROLLERS

Series code	Serial code	Conveyor type	Requirement: discharge conveyor, folding conveyor	Requirement: discharge conveyor, folding conveyor, short	Requirement: discharge conveyor, short	Requirement: discharge conveyor, long	Requirement: discharge conveyor, standard	Requirement: loading conveyor	Width	Part no.
W 35 DC	0403	Discharge conveyor			4 pc.		6 pc.			182129
W 35 Ri	0703	Discharge conveyor			4 pc.		6 pc.			182129
W 35 XRi	0703	Discharge conveyor			4 pc.		6 pc.			182129
W 500	0605	Discharge conveyor			3 pc.		3 pc.			71844
		Discharge conveyor					10 pc.			8363
W 50	0805, 1005	Discharge conveyor			3 pc.		3 pc.			71844
W 50 DC	0905	Discharge conveyor			3 pc.		3 pc.			71844
W 50 DCi	1205	Discharge conveyor			3 pc.		3 pc.			71844

RETURN ROLLERS

Series code	Serial code	Conveyor type	Requirement: discharge conveyor, folding conveyor	Requirement: discharge conveyor, folding conveyor, short	Requirement: discharge conveyor, short	Requirement: discharge conveyor, long	Requirement: discharge conveyor, standard	Requirement: loading conveyor	Width	Part no.
W 50 R	1405	Discharge conveyor			1 pc.		3 pc.			2279214
W 50 Ri	1505	Discharge conveyor			1 pc.		3 pc.			2279214
W 50 H	1305	Discharge conveyor			3 pc.		3 pc.			71844
W 55 H	1305	Discharge conveyor			3 pc.		3 pc.			71844
W 55 HR	1805	Discharge conveyor			1 pc.	3 pc.			400 mm	71844
W 60 R	1405	Discharge conveyor			1 pc.	2 pc.			350 mm	2279214
W 60 Ri	1505	Discharge conveyor			1 pc.	2 pc.			350 mm	2279214
W 60	0910	Discharge conveyor					6 pc.			72067
W 60i	1210	Discharge conveyor					6 pc.			72067
W 100	0910	Discharge conveyor					6 pc.			72067
W 100i	1210	Discharge conveyor					6 pc.			72067

CONVEYOR UNIT

RETURN ROLLERS

Series code	Serial code	Conveyor type	Requirement: discharge conveyor, folding conveyor	Requirement: discharge conveyor, folding conveyor, short	Requirement: discharge conveyor, short	Requirement: discharge conveyor, long	Requirement: discharge conveyor, standard	Requirement: loading conveyor	Width	Part no.
W 100	1010	Discharge conveyor					6 pc.			72067
W 100 L	1010	Discharge conveyor					6 pc.			72067
W 100 H	1910	Discharge conveyor	4 pc.				3 pc.			71844
W 100	1110	Discharge conveyor					6 pc.			72067
W 100 R	1510	Discharge conveyor			5 pc.	5 pc.	6 pc.			2373013
W 100 Ri	1610	Discharge conveyor			5 pc.	5 pc.	6 pc.			2373013
W 100 H	1410	Discharge conveyor	4 pc.				3 pc.			71844
W 100 HR	2110	Discharge conveyor	4 pc.				3 pc.			71844
W 100 Fi	2710	Discharge conveyor	5 pc.	4 pc.			6 pc.		600 mm	2341068
		Loading conveyor						3 pc.	650 mm	2341067
W 120 R	1510	Discharge conveyor			5 pc.	5 pc.	6 pc.			2373013
W 120 Ri	1610	Discharge conveyor			5 pc.	5 pc.	6 pc.			2373013

RETURN ROLLERS

Series code	Serial code	Conveyor type	Requirement: discharge conveyor, folding conveyor	Requirement: discharge conveyor, folding conveyor, short	Requirement: discharge conveyor, short	Requirement: discharge conveyor, long	Requirement: discharge conveyor, standard	Requirement: loading conveyor	Width	Part no.
W 130 H	1410, 1910	Discharge conveyor	4 pc.				3 pc.			71844
W 130 HR	2210	Discharge conveyor	4 pc.				3 pc.			71844
W 1000 F	0710	Discharge conveyor; Loading conveyor					6 pc.	3 pc.		90121
W 100 F	0810	Loading conveyor						3 pc.	650 mm	191392
		Discharge conveyor	5 pc.	4 pc.			6 pc.		600 mm	90121
W 100 Fi	1310	Discharge conveyor	5 pc.	4 pc.			6 pc.		600 mm	90121
		Loading conveyor						3 pc.	650 mm	191392
W 100 CF	1710	Loading conveyor						3 pc.	650 mm	2341067
		Discharge conveyor	5 pc.	4 pc.			6 pc.		600 mm	2341068
W 100 CFi	1810	Discharge conveyor	5 pc.	4 pc.			6 pc.		600 mm	2341068
		Loading conveyor						3 pc.	650 mm	2341067
W 100 XFi	1810	Discharge conveyor	5 pc.	4 pc.			6 pc.		600 mm	2341068
		Loading conveyor						3 pc.	650 mm	2341067

Original WIRTGEN

CONVEYOR UNIT

RETURN ROLLERS										
Series code	Serial code	Conveyor type	Requirement: discharge conveyor, folding conveyor	Requirement: discharge conveyor, folding conveyor, short	Requirement: discharge conveyor, short	Requirement: discharge conveyor, long	Requirement: discharge conveyor, standard	Requirement: loading conveyor	Width	Part no.
W 1200 F	0710	Discharge conveyor; Loading conveyor					6 pc.	3 pc.		90121
W 120 F	0810	Discharge conveyor	5 pc.	4 pc.			6 pc.		600 mm	90121
		Loading conveyor						3 pc.	650 mm	191392
W 120 Fi	1310	Discharge conveyor	5 pc.	4 pc.			6 pc.		600 mm	90121
		Loading conveyor						3 pc.	650 mm	191392
W 120 CF	1710	Discharge conveyor	5 pc.	4 pc.			6 pc.		600 mm	2341068
		Loading conveyor						3 pc.	650 mm	2341067
W 120 CFi	1810	Discharge conveyor	5 pc.	4 pc.			6 pc.		600 mm	2341068
		Loading conveyor						3 pc.	650 mm	2341067
W 120 XTi	1810	Discharge conveyor	5 pc.	4 pc.			6 pc.		600 mm	2341068
		Loading conveyor						3 pc.	650 mm	2341067
W 120 XFi	1810	Loading conveyor						3 pc.	650 mm	2341067
		Discharge conveyor	5 pc.	4 pc.			6 pc.		600 mm	2341068
W 120 Fi	2710	Loading conveyor						3 pc.	650 mm	2341067

RETURN ROLLERS

Series code	Serial code	Conveyor type	Requirement: discharge conveyor, folding conveyor	Requirement: discharge conveyor, folding conveyor, short	Requirement: discharge conveyor, short	Requirement: discharge conveyor, long	Requirement: discharge conveyor, standard	Requirement: loading conveyor	Width	Part no.
W 120 Fi	2710	Discharge conveyor	5 pc.	4 pc.			6 pc.		600 mm	2341068
W 120 FTi	2710	Loading conveyor	5 pc.	4 pc.			6 pc.		600 mm	2341068
		Loading conveyor						3 pc.	650 mm	2341067
W 1300 F	0710	Discharge conveyor; Loading conveyor					6 pc.	3 pc.		90121
W 130 F	0810	Discharge conveyor	5 pc.	4 pc.			6 pc.		600 mm	90121
		Loading conveyor						3 pc.	650 mm	191392
W 130 Fi	1310	Discharge conveyor	5 pc.	4 pc.			6 pc.		600 mm	90121
		Loading conveyor						3 pc.	650 mm	191392
W 130 CF	1710	Discharge conveyor	5 pc.	4 pc.			6 pc.		600 mm	2341068
		Loading conveyor						3 pc.	650 mm	2341067
W 130 CFi	1810	Discharge conveyor	5 pc.	4 pc.			6 pc.		600 mm	2341068
		Loading conveyor						3 pc.	650 mm	2341067
W 130 XFi	1810	Discharge conveyor	5 pc.	4 pc.			6 pc.		600 mm	2341068
		Loading conveyor						3 pc.	650 mm	2341067

Original WIRTGEN

CONVEYOR UNIT

RETURN ROLLERS										
Series code	Serial code	Conveyor type	Requirement: discharge conveyor, folding conveyor	Requirement: discharge conveyor, folding conveyor, short	Requirement: discharge conveyor, short	Requirement: discharge conveyor, long	Requirement: discharge conveyor, standard	Requirement: loading conveyor	Width	Part no.
W 130 Fi	2710	Discharge conveyor	5 pc.	4 pc.			6 pc.		600 mm	2341068
		Loading conveyor						3 pc.	650 mm	2341067
W 1500	0820	Loading conveyor						2 pc.		52889
		Discharge conveyor	5 pc.				5 pc.			111348
W 150	0513	Loading conveyor						2 pc.	650 mm	191392
		Discharge conveyor	5 pc.	4 pc.			6 pc.		600 mm	90121
W 150i	0613	Loading conveyor						2 pc.	650 mm	191392
		Discharge conveyor	5 pc.	4 pc.			6 pc.		600 mm	90121
W 150 CF	0713	Loading conveyor						2 pc.	650 mm	2341067
		Discharge conveyor	5 pc.	4 pc.			5 pc.		600 mm	2341068
W 150 CFi	0813	Loading conveyor						2 pc.	650 mm	2341067
		Discharge conveyor	5 pc.	4 pc.			5 pc.		600 mm	2341068
W 150 XFi	0813	Discharge conveyor	5 pc.	4 pc.			5 pc.		600 mm	2341068
		Loading conveyor						2 pc.	650 mm	2341067
W 1900	0820, 0920	Loading conveyor						2 pc.		52889

RETURN ROLLERS

Series code	Serial code	Conveyor type	Requirement: discharge conveyor, folding conveyor	Requirement: discharge conveyor, folding conveyor, short	Requirement: discharge conveyor, short	Requirement: discharge conveyor, long	Requirement: discharge conveyor, standard	Requirement: loading conveyor	Width	Part no.
W 1900	0820, 0920	Discharge conveyor	5 pc.				5 pc.			111348
	1020	Discharge conveyor	5 pc.				5 pc.			111348
		Loading conveyor						2 pc.		52889
W 195	1820	Discharge conveyor; Loading conveyor	5 pc.				5 pc.	2 pc.		2091190
W 2000	0620, 1120	Discharge conveyor; Loading conveyor	5 pc.				5 pc.	2 pc.		111348
W 200	1220	Discharge conveyor; Loading conveyor	5 pc.				5 pc.	2 pc.		2091190
W 200i	1420	Discharge conveyor; Loading conveyor	5 pc.				5 pc.	2 pc.		2091190
W 200 F	2020	Discharge conveyor; Loading conveyor	5 pc.				5 pc.	2 pc.		2091190
W 200 Fi	2120	Discharge conveyor; Loading conveyor	5 pc.				5 pc.	2 pc.		2091190

Original WIRTGEN

CONVEYOR UNIT

RETURN ROLLERS										
Series code	Serial code	Conveyor type	Requirement: discharge conveyor, folding conveyor	Requirement: discharge conveyor, folding conveyor, short	Requirement: discharge conveyor, short	Requirement: discharge conveyor, long	Requirement: discharge conveyor, standard	Requirement: loading conveyor	Width	Part no.
W 200 H	1620	Discharge conveyor	5 pc.						850 mm	2091190
		Discharge conveyor; Loading conveyor	3 pc.					2 pc.	800 mm	2104500
W 200 Hi	1720	Discharge conveyor	5 pc.						850 mm	2091190
		Discharge conveyor; Loading conveyor	3 pc.					2 pc.	800 mm	2104500
W 205	2520	Discharge conveyor; Loading conveyor	5 pc.				5 pc.	2 pc.		2091190
W 207 Fi	2120	Discharge conveyor; Loading conveyor	5 pc.				5 pc.	2 pc.		2091190
W 2100	0921	Discharge conveyor	5 pc.				5 pc.			53907
		Loading conveyor						2 pc.		146073
W 210	1320	Discharge conveyor; Loading conveyor	5 pc.				5 pc.	2 pc.		2091190

RETURN ROLLERS

Series code	Serial code	Conveyor type	Requirement: discharge conveyor, folding conveyor	Requirement: discharge conveyor, folding conveyor, short	Requirement: discharge conveyor, short	Requirement: discharge conveyor, long	Requirement: discharge conveyor, standard	Requirement: loading conveyor	Width	Part no.
W 210i	1520	Discharge conveyor; Loading conveyor	5 pc.				5 pc.	2 pc.		2091190
W 210 Fi	2320	Discharge conveyor; Loading conveyor	5 pc.				5 pc.	2 pc.		2091190
W 210 XP	2420	Discharge conveyor; Loading conveyor	5 pc.				5 pc.	2 pc.		2091190
W 215	1920	Discharge conveyor; Loading conveyor	5 pc.				5 pc.	2 pc.		2091190
W 2200	0821	Discharge conveyor	5 pc.				5 pc.			116747
		Loading conveyor						2 pc.		146072
W 220	0522	Loading conveyor						2 pc.	1100 mm	2147184
		Discharge conveyor	5 pc.				5 pc.		1000 mm	2219716
W 220i	0722	Loading conveyor						2 pc.	1100 mm	2147184
		Discharge conveyor	5 pc.				5 pc.		1000 mm	2219716
W 220 Fi	1122	Loading conveyor						2 pc.	1100 mm	2147184

CONVEYOR UNIT

RETURN ROLLERS

Series code	Serial code	Conveyor type	Requirement: discharge conveyor, folding conveyor	Requirement: discharge conveyor, folding conveyor, short	Requirement: discharge conveyor, short	Requirement: discharge conveyor, long	Requirement: discharge conveyor, standard	Requirement: loading conveyor	Width	Part no.
W 220 Fi	1122	Discharge conveyor	5 pc.				5 pc.		1000 mm	2219716
W 250	0422	Discharge conveyor; Loading conveyor	5 pc.				5 pc.	2 pc.		2147184
W 250i	0622	Discharge conveyor; Loading conveyor	5 pc.				5 pc.	2 pc.		2147184
W 250 Fi	1322	Discharge conveyor; Loading conveyor	5 pc.				5 pc.	2 pc.		2147184
2200 CR	0821	Loading conveyor						2 pc.		146072
		Discharge conveyor	5 pc.				5 pc.			116747
W 240 CR	03CR	Discharge conveyor; Loading conveyor	5 pc.					2 pc.		2147184
W 240 CRi	04CR	Discharge conveyor; Loading conveyor	5 pc.					2 pc.		2147184
W 380 CR	03CR	Discharge conveyor; Loading conveyor	5 pc.					2 pc.		2147184

RETURN ROLLERS

Series code	Serial code	Conveyor type	Requirement: discharge conveyor, folding conveyor	Requirement: discharge conveyor, folding conveyor, short	Requirement: discharge conveyor, short	Requirement: discharge conveyor, long	Requirement: discharge conveyor, standard	Requirement: loading conveyor	Width	Part no.
W 380 CRi	04CR	Discharge conveyor; Loading conveyor	5 pc.					2 pc.		2147184
KMA 220	05MS	Loading conveyor						19 pc.		150768
		Discharge conveyor	2 pc.							111348
		Loading conveyor						4 pc.		150792
2200 SM	0821	Loading conveyor						2 pc.		146072
		Discharge conveyor	5 pc.				5 pc.			116747

Original WIRTGEN

MAINTENANCE PARTS

Filling or lubricating your machine with a lubricant specially tailored to the application has a significant impact on the service life of the active parts in combustion engines, hydraulic components, gearboxes and bearings. WIRTGEN GROUP lubricants are optimised for your machine and therefore meet these special requirements perfectly. Combined with WIRTGEN GROUP filter sets and maintenance packages, our lubricants are the best choice to maintain the performance of your machine and permanently reduce maintenance costs.

> Read more online

FILTER PACKAGES

WIRTGEN GROUP filter systems, which are designed to be perfectly compatible with our lubricants and operating agents, ensure that the systems remain clean and prevent damage to components, thus maximising the service life of your machines. The filter packages contain the engine and hydraulic filters required based on the machine type's respective replacement interval. In order to ensure that the machine performs at its best, we recommend that you adhere to the specified replacement intervals.

FILTER PACKAGES

Series code	Serial code	Series range	Type	Application	First service	Replacement interval	Part no.
W 35 DC	0403	1 - 165	Engine		50 h	500 h; 1000 h	189278
		1 - 9999	Hydraulics			1000 h	106520
			Hydraulics		50 h	500 h	107665

Due to possible technical changes, always refer to the information in the instruction manual.

FILTER PACKAGES

Series code	Serial code	Series range	Type	Application	First service	Replacement interval	Part no.
W 35 DC	0403	166 - 9999	Engine			500 h; 1000 h	2089190
			Engine		50 h		2219665
W 35 Ri	0703	1 - 9999	Engine		50 h		2438131
			Hydraulics			1000 h	2449922
			Hydraulics		50 h	500 h	2438377
			Engine			500 h	2438358
W 500	0605	5 - 275	Engine			500 h; 1000 h	106521
			Engine		50 h	250 h	107686
			Hydraulics		50 h	500 h	107649
			Hydraulics			1000 h	106522
		276 - 903	Engine		50 h	250 h	107686
			Engine			500 h; 1000 h	106523
		276 - 9999	Hydraulics		50 h	500 h	107650
			Hydraulics			1000 h	106531
		904 - 9999	Engine			500 h; 1000 h	125016
			Engine		50 h	250 h	125015
W 50	0805	1 - 9999	Engine		50 h	500 h; 1000 h	181302
			Hydraulics			1000 h	182469
			Hydraulics		50 h	500 h	182467
	1005	1 - 27	Engine		50 h	500 h; 1000 h	2056606
		1 - 9999	Hydraulics		50 h	500 h	182467
			Hydraulics			1000 h	182469
		28 - 9999	Engine			500 h; 1000 h	2089191
			Engine		50 h		2219642
W 50 DC	0905	1 - 234	Engine		50 h	500 h; 1000 h	181303
		1 - 9999	Hydraulics		50 h	500 h	182467

Due to possible technical changes, always refer to the information in the instruction manual.

FILTER PACKAGES

Series code	Serial code	Series range	Type	Application	First service	Replacement interval	Part no.
W 50 DC	0905	1 - 9999	Hydraulics			1000 h	182469
		235 - 9999	Engine			500 h; 1000 h	2085671
			Engine		50 h		2219616
W 50 DCi	1205	1 - 9999	Hydraulics		50 h	500 h	182467
			Engine			500 h; 1000 h	2336958
			Engine		50 h		2336956
			Hydraulics			1000 h	182469
W 50 R	1405	1 - 9999	Hydraulics		50 h	500 h	182467
			Engine			500 h	2451842
			Engine		50 h		2219616
			Hydraulics			1000 h	182469
W 50 Ri	1505	1 - 999	Engine			1000 h	2370101
		1 - 9999	Hydraulics		50 h	500 h	182467
			Hydraulics			1000 h	182469
			Engine		50 h		2336956
			Engine			500 h	2370101
		1001 - 9999	Engine			1000 h	2520117
W 50 H	1305	1 - 9999	Hydraulics		50 h		2592883
			Hydraulics			500 h	2592891
			Hydraulics			1000 h	2592895
			Engine			1000 h	2592904
			Engine			250 h	2592902
			Engine			500 h	2592903
			Engine		50 h		2592898
W 55 H	1305	1 - 9999	Hydraulics		50 h		2592883
			Hydraulics			500 h	2592891

Due to possible technical changes, always refer to the information in the instruction manual.

FILTER PACKAGES

Series code	Serial code	Series range	Type	Application	First service	Replacement interval	Part no.
W 55 H	1305	1 - 9999	Hydraulics			1000 h	2592895
			Engine			1000 h	2592904
			Engine			250 h	2592902
			Engine			500 h	2592903
			Engine		50 h		2592898
W 60 R	1405	1 - 9999	Hydraulics		50 h	500 h	182467
			Engine			500 h	2451842
			Engine		50 h		2219616
			Hydraulics			1000 h	182469
W 60 Ri	1505	1 - 999	Engine			1000 h	2370101
		1 - 9999	Hydraulics		50 h	500 h	182467
			Hydraulics			1000 h	182469
			Engine		50 h		2336956
			Engine			500 h	2370101
		1001 - 9999	Engine			1000 h	2520117
W 60	0910	1 - 9999	Hydraulics		50 h	500 h	182467
			Engine		50 h		2196864
			Engine			500 h; 1000 h	2063467
			Hydraulics			1000 h	182469
W 60i	1210	1 - 9999	Hydraulics		50 h	500 h	182467
			Engine		50 h		2219670
			Engine			500 h; 1000 h	2217206
			Hydraulics			1000 h	182469
W 100	0910	1 - 9999	Hydraulics		50 h	500 h	182467
			Engine		50 h		2196864
			Engine			500 h; 1000 h	2063467

Due to possible technical changes, always refer to the information in the instruction manual.

FILTER PACKAGES							
Series code	Serial code	Series range	Type	Application	First service	Replacement interval	Part no.
W 100	0910	1 - 9999	Hydraulics			1000 h	182469
W 100i	1210	1 - 9999	Hydraulics		50 h	500 h	182467
			Engine		50 h		2219670
			Engine			500 h; 1000 h	2217206
			Hydraulics			1000 h	182469
W 100	1010	1 - 9999	Hydraulics		50 h	500 h	182467
			Engine		50 h		2196864
			Engine			500 h; 1000 h	2063467
			Hydraulics			1000 h	182469
W 100 H	1910	1 - 9999	Engine			500 h	2379534
			Hydraulics			1000 h	2592826
			Hydraulics		50 h	500 h	2592824
			Engine		50 h		2379537
W 100	1110	1 - 9999	Hydraulics		50 h	500 h	182467
			Engine		50 h		2196864
			Engine			500 h	2063467
			Hydraulics			1000 h	182469
W 100 R	1510	1 - 9999	Hydraulics		50 h	500 h	182467
			Engine		50 h		2196864
			Engine			500 h	2063467
			Hydraulics			1000 h	182469
W 100 Ri	1610	1 - 9999	Hydraulics		50 h	500 h	182467
			Hydraulics			1000 h	182469
			Engine			1000 h	2572683
			Engine		50 h		2219670
			Engine			500 h	2217206

Due to possible technical changes, always refer to the information in the instruction manual.

FILTER PACKAGES

Series code	Serial code	Series range	Type	Application	First service	Replacement interval	Part no.
W 100 H	1410	1 - 9999	Engine		50 h	250 h; 500 h; 1000 h	2586988
			Hydraulics			1000 h	2592826
			Hydraulics		50 h	500 h	2592824
W 100 Fi	2710	1 - 9999	Engine		50 h		2946907
			Engine			500 h	2946908
			Hydraulics			1000 h	172347
			Hydraulics			500 h	181355
			Engine			1000 h	2946909
W 120 R	1510	1 - 9999	Hydraulics		50 h	500 h	182467
			Engine		50 h		2196864
			Engine			500 h	2063467
			Hydraulics			1000 h	182469
W 120 Ri	1610	1 - 9999	Hydraulics		50 h	500 h	182467
			Engine			1000 h	2572683
			Engine		50 h		2219670
			Engine			500 h	2217206
			Hydraulics			1000 h	182469
W 130 H	1410	1 - 9999	Engine		50 h	250 h; 500 h; 1000 h	2586988
			Hydraulics			1000 h	2592826
			Hydraulics		50 h	500 h	2592824
	1910	1 - 9999	Engine			500 h	2379534
			Hydraulics			1000 h	2592826
			Hydraulics		50 h	500 h	2592824
			Engine		50 h		2379537
W 1000 F	0710	1 - 329	Hydraulics			1000 h	105556
			Hydraulics		50 h	500 h	107664

Due to possible technical changes, always refer to the information in the instruction manual.

FILTER PACKAGES

Series code	Serial code	Series range	Type	Application	First service	Replacement interval	Part no.
W 1000 F	0710	2 - 74	Engine		50 h	500 h; 1000 h	136834
		75 - 559	Engine		50 h	500 h; 1000 h	136833
		330 - 9999	Hydraulics		50 h	500 h	181355
			Hydraulics			1000 h	172347
		560 - 9999	Engine		50 h	500 h; 1000 h	182335
W 100 F	0810	1 - 9999	Hydraulics			1000 h	172347
			Engine		50 h		2196859
			Engine			500 h; 1000 h	2060509
			Hydraulics		50 h	500 h	181355
W 100 Fi	1310	1 - 9999	Hydraulics			1000 h	172347
			Engine		50 h		2219674
			Engine			500 h; 1000 h	2217202
			Hydraulics		50 h	500 h	181355
W 100 CF	1710	1 - 9999	Hydraulics			1000 h	172347
			Engine		50 h		2196859
			Engine			500 h	2060509
			Hydraulics		50 h	500 h	181355
W 100 CFi	1810	1 - 9999	Hydraulics		50 h	500 h	181355
			Engine		50 h		2428648
			Hydraulics			1000 h	172347
			Engine			1000 h	2428651
			Engine			500 h	2428649
W 1200 F	0710	1 - 329	Hydraulics			1000 h	105556
			Hydraulics		50 h	500 h	107664
		2 - 74	Engine		50 h	500 h; 1000 h	136834
		75 - 559	Engine		50 h	500 h; 1000 h	136833

Due to possible technical changes, always refer to the information in the instruction manual.

FILTER PACKAGES

Series code	Serial code	Series range	Type	Application	First service	Replacement interval	Part no.
W 1200 F	0710	330 - 9999	Hydraulics		50 h	500 h	181355
			Hydraulics			1000 h	172347
		560 - 9999	Engine		50 h	500 h; 1000 h	182335
W 120 F	0810	1 - 9999	Hydraulics			1000 h	172347
			Engine		50 h		2196859
			Engine			500 h; 1000 h	2060509
			Hydraulics		50 h	500 h	181355
W 120 Fi	1310	1 - 9999	Hydraulics			1000 h	172347
			Engine		50 h		2219674
			Engine			500 h; 1000 h	2217202
			Hydraulics		50 h	500 h	181355
W 120 CF	1710	1 - 9999	Hydraulics			1000 h	172347
			Engine		50 h		2196859
			Engine			500 h	2060509
			Hydraulics		50 h	500 h	181355
W 120 CFi	1810	1 - 9999	Hydraulics			1000 h	172347
			Hydraulics		50 h	500 h	181355
			Engine			1000 h	2428651
			Engine			500 h	2428649
			Engine		50 h		2428648
W 120 Fi	2710	1 - 9999	Engine		50 h		2946907
			Engine			500 h	2946908
			Hydraulics			1000 h	172347
			Hydraulics			500 h	181355
			Engine			1000 h	2946909
W 120 FTi	2710	1 - 9999	Engine		50 h		2946907

Due to possible technical changes, always refer to the information in the instruction manual.

FILTER PACKAGES

Series code	Serial code	Series range	Type	Application	First service	Replacement interval	Part no.
W 120 FTi	2710	1 - 9999	Engine			500 h	2946908
			Hydraulics			1000 h	172347
			Hydraulics			500 h	181355
			Engine			1000 h	2946909
W 1300 F	0710	1 - 329	Hydraulics			1000 h	105556
			Hydraulics		50 h	500 h	107664
		2 - 74	Engine		50 h	500 h; 1000 h	136834
		75 - 559	Engine		50 h	500 h; 1000 h	136833
		330 - 9999	Hydraulics		50 h	500 h	181355
			Hydraulics			1000 h	172347
		560 - 9999	Engine		50 h	500 h; 1000 h	182335
W 130 F	0810	1 - 9999	Hydraulics			1000 h	172347
			Engine		50 h		2196859
			Engine			500 h; 1000 h	2060509
			Hydraulics		50 h	500 h	181355
W 130 Fi	1310	1 - 9999	Hydraulics			1000 h	172347
			Engine		50 h		2219674
			Engine			500 h; 1000 h	2217202
			Hydraulics		50 h	500 h	181355
W 130 CF	1710	1 - 9999	Hydraulics			1000 h	172347
			Engine		50 h		2196859
			Engine			500 h	2060509
			Hydraulics		50 h	500 h	181355
W 130 CFi	1810	1 - 9999	Hydraulics			1000 h	172347
			Hydraulics		50 h	500 h	181355
			Engine			1000 h	2428651

Due to possible technical changes, always refer to the information in the instruction manual.

FILTER PACKAGES

Series code	Serial code	Series range	Type	Application	First service	Replacement interval	Part no.
W 130 CFi	1810	1 - 9999	Engine			500 h	2428649
			Engine		50 h		2428648
W 130 Fi	2710	1 - 9999	Engine		50 h		2946907
			Engine			500 h	2946908
			Hydraulics			1000 h	172347
			Hydraulics			500 h	181355
			Engine			1000 h	2946909
W 1500	0820	1 - 638	Hydraulics			1000 h	130775
			Hydraulics		50 h	500 h	181920
		1 - 9999	Engine			500 h; 1000 h	147248
			Engine		50 h	250 h	193135
		639 - 9999	Hydraulics		50 h	500 h	2160672
			Hydraulics			1000 h	2160674
W 150	0513	1 - 9999	Hydraulics			1000 h	172347
			Engine		50 h		2196859
			Engine			500 h; 1000 h	2060509
			Hydraulics		50 h	500 h	181355
W 150i	0613	1 - 9999	Hydraulics			1000 h	172347
			Engine		50 h		2219674
			Engine			500 h; 1000 h	2217202
			Hydraulics		50 h	500 h	181355
W 150 CF	0713	1 - 9999	Hydraulics			1000 h	172347
			Engine		50 h		2196859
			Engine			500 h	2060509
			Hydraulics		50 h	500 h	181355
W 150 CFi	0813	1 - 9999	Hydraulics			1000 h	172347

Due to possible technical changes, always refer to the information in the instruction manual.

FILTER PACKAGES

Series code	Serial code	Series range	Type	Application	First service	Replacement interval	Part no.
W 150 CFi	0813	1 - 9999	Hydraulics		50 h	500 h	181355
			Engine			1000 h	2428651
			Engine			500 h	2428649
			Engine		50 h		2428648
W 1900	0820	1 - 638	Hydraulics			1000 h	130775
			Hydraulics		50 h	500 h	181920
		1 - 9999	Engine		50 h	250 h	193135
			Engine			500 h; 1000 h	147248
		639 - 9999	Hydraulics			1000 h	2160674
			Hydraulics		50 h	500 h	2160672
	0920	1 - 638	Hydraulics			1000 h	130775
			Hydraulics		50 h	500 h	181920
		1 - 9999	Engine			500 h; 1000 h	147248
			Engine		50 h	250 h	193135
		639 - 9999	Hydraulics		50 h	500 h	2160672
			Hydraulics			1000 h	2160674
	1020	1 - 9999	Hydraulics		50 h	500 h	2160672
			Engine		50 h	250 h	2594264
			Engine			500 h; 1000 h	2586907
			Hydraulics			1000 h	2160674
W 195	1820	1 - 9999	Hydraulics		50 h	500 h	2110454
			Hydraulics			1000 h	2591800
			Engine		50 h		2196860
			Engine			500 h	2141040
W 2000	0620	1 - 865	Engine		50 h	250 h	192887
			Engine			500 h; 1000 h	130774

Due to possible technical changes, always refer to the information in the instruction manual.

FILTER PACKAGES

Series code	Serial code	Series range	Type	Application	First service	Replacement interval	Part no.
W 2000	0620	1 - 1438	Hydraulics		50 h	500 h	181920
			Hydraulics			1000 h	130775
		866 - 9999	Engine		50 h	250 h	194311
			Engine			500 h; 1000 h	194312
		1439 - 9999	Hydraulics		50 h	500 h	2160672
			Hydraulics			1000 h	2160674
	1120	1 - 533	Engine		50 h	250 h	194311
			Engine			500 h; 1000 h	2586677
		1 - 9999	Hydraulics			1000 h	2160674
			Hydraulics		50 h	500 h	2160672
		534 - 635	Engine			500 h; 1000 h	2586679
			Engine		50 h	250 h	2592866
		636 - 9999	Engine			500 h; 1000 h	2586682
			Engine		50 h	250 h	2592909
W 200	1220	1 - 9999	Hydraulics		50 h	500 h	2110454
			Engine		50 h		2196860
			Engine			500 h; 1000 h	2141040
			Hydraulics			1000 h	2110456
W 200i	1420	1 - 22	Engine		50 h		2219675
			Engine			500 h	2217204
		1 - 9999	Hydraulics		50 h	500 h	2110454
			Hydraulics			1000 h	2110456
		23 - 888	Engine		50 h		2219675
			Engine			500 h	2547239
		1001 - 9999	Engine			1000 h	2432907
			Engine			500 h	2432906

Due to possible technical changes, always refer to the information in the instruction manual.

FILTER PACKAGES

Series code	Serial code	Series range	Type	Application	First service	Replacement interval	Part no.
W 200i	1420	1001 - 9999	Engine		50 h		2432905
W 200 F	2020	1 - 9999	Hydraulics		50 h	500 h	2110454
			Engine		50 h		2196860
			Engine			1000 h	2875321
			Engine			500 h	2721944
			Hydraulics			1000 h	2680061
W 200 Fi	2120	1 - 9999	Hydraulics		50 h	500 h	2110454
			Hydraulics			1000 h	2680061
			Engine			1000 h	2680196
			Engine			500 h	2680195
			Engine		50 h		2680194
W 200 H	1620	1 - 9999	Engine		50 h		2196860
			Hydraulics		50 h	500 h	2273099
			Hydraulics			1000 h	2273095
			Engine			500 h; 1000 h	2223531
W 200 Hi	1720	1 - 3	Engine		50 h		2219675
			Engine			500 h	2217204
		1 - 9999	Hydraulics			1000 h	2273095
			Hydraulics		50 h	500 h	2273099
		4 - 888	Engine		50 h		2219675
			Engine			500 h	2547239
		1001 - 9999	Engine			1000 h	2446714
			Engine			500 h	2446710
			Engine		50 h		2432905
W 205	2520	1 - 9999	Hydraulics		50 h	500 h	2110454
			Hydraulics			1000 h	2591800

Due to possible technical changes, always refer to the information in the instruction manual.

FILTER PACKAGES

Series code	Serial code	Series range	Type	Application	First service	Replacement interval	Part no.
W 205	2520	1 - 9999	Engine		50 h		2196860
			Engine			500 h	2141040
W 207 Fi	2120	1 - 9999	Hydraulics		50 h	500 h	2110454
			Hydraulics			1000 h	2680061
			Engine			1000 h	2680196
			Engine			500 h	2680195
			Engine		50 h		2680194
W 2100	0921	1 - 129	Engine			500 h; 1000 h	130774
			Engine		50 h	250 h	192887
		1 - 384	Hydraulics			1000 h	130775
			Hydraulics		50 h	500 h	181920
		130 - 9999	Engine			500 h; 1000 h	186536
			Engine		50 h	250 h	193132
		385 - 9999	Hydraulics		50 h	500 h	2160672
			Hydraulics			1000 h	2160674
W 210	1320	1 - 9999	Hydraulics		50 h	500 h	2110454
			Engine		50 h		2196861
			Engine			500 h; 1000 h	2141041
			Hydraulics			1000 h	2110456
W 210i	1520	1 - 999	Engine			500 h	2217203
			Engine		50 h		2219676
		1 - 9999	Hydraulics		50 h	500 h	2110454
			Hydraulics			1000 h	2110456
		1001 - 9999	Engine		50 h		2432165
			Engine			500 h	2432166
			Engine			1000 h	2432168

Due to possible technical changes, always refer to the information in the instruction manual.

FILTER PACKAGES

Series code	Serial code	Series range	Type	Application	First service	Replacement interval	Part no.
W 210 Fi	2320	1 - 9999	Hydraulics		50 h	500 h	2110454
			Engine		50 h		2500496
			Engine			1000 h	2881265
			Hydraulics			1000 h	2680061
			Engine			500 h	2680058
W 210 XP	2420	1 - 9999	Hydraulics		50 h	500 h	2110454
			Engine		50 h		2219172
			Engine			250 h	2215627
			Hydraulics			1000 h	2110456
W 215	1920	1 - 9999	Hydraulics		50 h	500 h	2110454
			Hydraulics			1000 h	2591800
			Engine		50 h		2196860
			Engine			500 h	2141040
W 2200	0821	1 - 499	Engine			500 h	130344
			Hydraulics			1000 h	130345
			Engine		50 h	250 h	193133
			Hydraulics		50 h	500 h	193134
		500 - 9999	Engine		50 h	250 h	2110174
			Engine			500 h	2110175
			Hydraulics		50 h	500 h	2110454
			Hydraulics			1000 h	2110456
W 220	0522	1 - 9999	Hydraulics		50 h	500 h	2110454
			Engine		50 h		2219172
			Engine			250 h	2215627
			Hydraulics			1000 h	2110456
W 220i	0722	1 - 9999	Hydraulics		50 h	500 h	2110454

Due to possible technical changes, always refer to the information in the instruction manual.

FILTER PACKAGES

Series code	Serial code	Series range	Type	Application	First service	Replacement interval	Part no.
W 220i	0722	1 - 9999	Hydraulics			1000 h	2110456
			Engine			1000 h	2548852
			Engine			500 h	2546015
			Engine		50 h		2546013
W 220 Fi	1122	1 - 158	Hydraulics			500 h	2110454
			Hydraulics			1000 h	2680061
		1 - 9999	Engine			1000 h	2881265
			Cabin			1000 h	2543761
			Engine			500 h	2680058
			Engine		50 h		2500496
		159 - 9999	Hydraulics			500 h	2871758
			Hydraulics			1000 h	2871759
W 250	0422	1 - 9999	Hydraulics		50 h	500 h	2110454
			Engine		50 h		2196862
			Engine			500 h	2173465
			Hydraulics			1000 h	2110456
W 250i	0622	1 - 999	Engine		50 h		2275504
			Engine			500 h	2275505
		1 - 9999	Hydraulics			1000 h	2110456
			Hydraulics		50 h	500 h	2110454
		1001 - 9999	Engine			500 h	2466711
			Engine		50 h		2466710
			Engine			1000 h	2466719
W 250 Fi	1322	1 - 9999	Cabin			1000 h	2543761
			Hydraulics			1000 h	2871759
			Hydraulics			500 h	2871758

Due to possible technical changes, always refer to the information in the instruction manual.

FILTER PACKAGES

Series code	Serial code	Series range	Type	Application	First service	Replacement interval	Part no.
W 250 Fi	1322	1 - 9999	Engine			1000 h	2797107
			Engine		50 h		2797105
			Engine			500 h	2797106
WR 2000	03WR	1 - 327	Hydraulics		50 h	500 h	181920
			Hydraulics			1000 h	130775
		1 - 9999	Engine			500 h; 1000 h	181919
			Engine		50 h	250 h	181918
		328 - 9999	Hydraulics		50 h	500 h	2160672
			Hydraulics			1000 h	2160674
WR 200	06WR	1 - 9999	Engine		50 h	250 h	181918
			Engine			500 h	181919
			Hydraulics			1000 h	2160674
			Hydraulics		50 h	500 h	2160672
WR 200i	09WR	1 - 9999	Hydraulics		50 h	500 h	2160672
			Hydraulics			1000 h	2160674
			Engine			500 h	2331704
			Engine		50 h		2331705
WR 200 XLi	09WR	1 - 9999	Hydraulics		50 h	500 h	2160672
			Engine			500 h	2331704
			Engine		50 h		2331705
			Hydraulics			1000 h	2160674
WR 2400	05WR	1 - 211	Hydraulics			1000 h	130775
			Hydraulics		50 h	500 h	181920
		1 - 9999	Engine			500 h; 1000 h	192131
			Engine		50 h	250 h	192389
		212 - 9999	Hydraulics			1000 h	2160674

Due to possible technical changes, always refer to the information in the instruction manual.

FILTER PACKAGES

Series code	Serial code	Series range	Type	Application	First service	Replacement interval	Part no.
WR 2400	05WR	212 - 9999	Hydraulics		50 h	500 h	2160672
WR 240	07WR	1 - 9999	Engine			500 h	2223531
			Engine		50 h		2196860
			Hydraulics		50 h	500 h	2160672
			Hydraulics			1000 h	2160674
WR 240i	10WR	1 - 83	Engine			500 h	2217204
		1 - 888	Engine		50 h		2219675
		1 - 9999	Hydraulics			1000 h	2160674
			Hydraulics		50 h	500 h	2160672
		84 - 888	Engine			500 h	2409545
		1001 - 9999	Engine		50 h		2432905
			Engine			500 h	2343449
			Engine			1000 h	2431650
WR 2500 S	04WR	1 - 350	Hydraulics			1000 h	165054
			Engine			500 h; 1000 h	165057
			Engine		50 h	250 h	165056
			Hydraulics		50 h	500 h	165055
		351 - 9999	Engine			250 h	2115213
			Hydraulics			1000 h	2116464
			Hydraulics		50 h	500 h	2116463
			Engine			500 h; 1000 h	2115214
			Engine		50 h		2219697
WR 250	08WR	1 - 9999	Hydraulics		50 h	500 h	2160672
			Engine			250 h	2262419
			Engine		50 h		2219172
			Hydraulics			1000 h	2160674

Due to possible technical changes, always refer to the information in the instruction manual.

FILTER PACKAGES

Series code	Serial code	Series range	Type	Application	First service	Replacement interval	Part no.
WR 250i	11WR	1 - 9999	Hydraulics		50 h	500 h	2160672
			Engine			250 h	2500497
			Engine		50 h		2500496
			Hydraulics			1000 h	2160674
WM 1000	03MS	1 - 37	Engine			500 h	166184
		1 - 134	Hydraulics			1000 h	166187
			Hydraulics			500 h	193136
		38 - 104	Engine			500 h	166186
		105 - 9999	Engine			500 h	2079386
		135 - 9999	Hydraulics			1000 h	2181375
			Hydraulics			500 h	2181374
2200 CR	0821	1 - 499	Engine			500 h; 1000 h	130344
			Hydraulics			1000 h	130345
			Engine		50 h	250 h	193133
			Hydraulics		50 h	500 h	193134
		500 - 9999	Engine		50 h	250 h	2110174
			Engine			500 h; 1000 h	2110175
			Hydraulics		50 h	500 h	2110454
			Hydraulics			1000 h	2110456
W 240 CR	03CR	1 - 9999	Hydraulics		50 h	500 h	2570001
			Engine			500 h; 1000 h	2570010
			Engine		50 h	250 h	2570009
			Hydraulics			1000 h	2570006
W 240 CRi	04CR	1 - 9999	Hydraulics		50 h	500 h	2570001
			Engine			500 h; 1000 h	2570008
			Engine		50 h	250 h	2570007

Due to possible technical changes, always refer to the information in the instruction manual.

FILTER PACKAGES

Series code	Serial code	Series range	Type	Application	First service	Replacement interval	Part no.
W 240 CRi	04CR	1 - 9999	Hydraulics			1000 h	2570006
W 380 CR	03CR	1 - 9999	Hydraulics		50 h	500 h	2570001
			Engine			500 h; 1000 h	2570010
			Engine		50 h	250 h	2570009
			Hydraulics			1000 h	2570006
W 380 CRi	04CR	1 - 9999	Hydraulics		50 h	500 h	2570001
			Engine			500 h; 1000 h	2570008
			Engine		50 h	250 h	2570007
			Hydraulics			1000 h	2570006
KMA 200	04MS	1 - 9999	Hydraulics		50 h	500 h	181920
			Engine			500 h	167637
			Hydraulics			1000 h	130775
KMA 220i	06MS	1 - 9999	Hydraulics		50 h	500 h	2160672
			Hydraulics			1000 h	2160674
			Engine			1000 h	2530854
			Engine			500 h	2463271
			Engine		50 h		2219670
KMA 220	05MS	1 - 42	Hydraulics			1000 h	130775
			Hydraulics		50 h	500 h	181920
		1 - 9999	Engine		50 h	500 h	2103183
		43 - 9999	Hydraulics		50 h	500 h	2160672
			Hydraulics			1000 h	2160674
RX 4500	05RX	1 - 9999	Engine		50 h	500 h	2054557
			Hydraulics		50 h	500 h	166477
4500 HM	02HM	1 - 15	Hydraulics		50 h	500 h; 1000 h	85249
		1 - 67	Engine		50 h	250 h; 500 h; 1000 h	166188

Due to possible technical changes, always refer to the information in the instruction manual.

FILTER PACKAGES

Series code	Serial code	Series range	Type	Application	First service	Replacement interval	Part no.
4500 HM	02HM	16 - 67	Hydraulics		50 h	500 h; 1000 h	167012
		68 - 9999	Hydraulics		50 h	500 h; 1000 h	165087
			Engine		50 h	250 h; 500 h; 1000 h	166263
HM 4500	06HM	1 - 6	Engine			250 h	125015
			Engine			500 h	125016
		1 - 28	Hydraulics			500 h	182359
		7 - 28	Engine			500 h	176653
		29 - 69	Engine			500 h	181303
		29 - 9999	Hydraulics			500 h	2181377
		70 - 9999	Engine			500 h	2085671
SP 150	09SP	1 - 4	Engine		50 h	500 h; 1000 h	181302
		1 - 9999	Hydraulics		50 h	500 h; 1000 h	2060566
		5 - 9999	Engine		50 h	500 h; 1000 h	2077854
SP 15	12SP	1 - 9999	Engine			500 h	2164063
			Engine		50 h		2196863
			Hydraulics		50 h	500 h	2164534
SP 15i	14SP	1 - 9999	Hydraulics		50 h	500 h; 1000 h	2164534
			Engine			500 h; 1000 h	2330727
			Engine		50 h		2219670
SP 250	08SP	1 - 65	Hydraulics			1000 h	107431
			Hydraulics		50 h	500 h	107655
			Engine		50 h	250 h	125015
			Engine			500 h; 1000 h	125016
		66 - 9999	Engine		50 h	500 h; 1000 h	176653
			Hydraulics		50 h	500 h	176654
			Hydraulics			1000 h	176655

Due to possible technical changes, always refer to the information in the instruction manual.

FILTER PACKAGES

Series code	Serial code	Series range	Type	Application	First service	Replacement interval	Part no.
SP 25	13SP	1 - 9999	Engine			500 h	2063467
			Engine		50 h		2196864
			Hydraulics		50 h	500 h	2167088
SP 25i	15SP	1 - 888	Engine			500 h	2217206
			Engine		50 h		2219670
		1 - 9999	Hydraulics		50 h	500 h	2167088
		1001 - 9999	Engine		50 h		2336956
			Engine			500 h	2336958
SP 500	10SP	1 - 59	Engine		50 h	500 h; 1000 h	182335
		1 - 9999	Hydraulics	Electric vibrators		1000 h	182339
			Hydraulics	Electric vibrators	50 h	500 h	182338
			Hydraulics	Hydraulic vibrators	50 h	500 h	182340
			Hydraulics	Hydraulic vibrators		1000 h	182341
		60 - 9999	Engine		50 h	500 h; 1000 h	2103183
SP 61	22SP	1 - 9999	Engine			500 h	2063467
			Hydraulics	Hydraulic vibrators	50 h	500 h	2362731
			Hydraulics	Electric vibrators	50 h	500 h	2362727
			Engine		50 h		2196864
SP 61i	23SP	1 - 9999	Engine			500 h	2217206
			Engine		50 h		2219670
			Engine			1000 h	2529911
			Hydraulics	Hydraulic vibrators		500 h	2362731
			Hydraulics	Electric vibrators		500 h	2362727
SP 62	22SP	1 - 9999	Engine			500 h	2063467
			Hydraulics	Hydraulic vibrators	50 h	500 h	2362731
			Hydraulics	Electric vibrators	50 h	500 h	2362727

Due to possible technical changes, always refer to the information in the instruction manual.

FILTER PACKAGES

Series code	Serial code	Series range	Type	Application	First service	Replacement interval	Part no.
SP 62	22SP	1 - 9999	Engine		50 h		2196864
SP 62i	23SP	1 - 9999	Engine			500 h	2217206
			Engine		50 h		2219670
			Engine			1000 h	2529911
			Hydraulics	Hydraulic vibrators		500 h	2362731
			Hydraulics	Electric vibrators		500 h	2362727
SP 64	22SP	1 - 9999	Engine			500 h	2063467
			Hydraulics	Hydraulic vibrators	50 h	500 h	2362731
			Hydraulics	Electric vibrators	50 h	500 h	2362727
			Engine		50 h		2196864
SP 64i	23SP	1 - 9999	Engine			500 h	2217206
			Engine		50 h		2219670
			Engine			1000 h	2529911
			Hydraulics	Hydraulic vibrators		500 h	2362731
			Hydraulics	Electric vibrators		500 h	2362727
SP 92	20SP	1 - 9999	Engine		50 h		2196859
			Hydraulics	Electric vibrators	50 h	500 h	2362727
			Hydraulics	Hydraulic vibrators	50 h	500 h	2362731
			Engine			500 h	2465134
SP 92i	21SP	1 - 9999	Engine			500 h	2465498
			Engine			1000 h	2474459
			Engine		50 h		2428648
			Hydraulics	Hydraulic vibrators		500 h	2362731
			Hydraulics	Electric vibrators		500 h	2362727
SP 94	20SP	1 - 9999	Engine		50 h		2196859
			Engine			500 h	2465134

FILTER PACKAGES

Series code	Serial code	Series range	Type	Application	First service	Replacement interval	Part no.
SP 94	20SP	1 - 9999	Hydraulics	Hydraulic vibrators	50 h	500 h	2362731
			Hydraulics	Electric vibrators	50 h	500 h	2362727
SP 94i	21SP	1 - 9999	Hydraulics	Electric vibrators		500 h	2362727
			Hydraulics	Hydraulic vibrators		500 h	2362731
			Engine			1000 h	2474459
			Engine			500 h	2465498
			Engine		50 h		2428648
SP 124	18SP	1 - 9999	Engine		50 h		2196859
			Engine			500 h	2465441
			Hydraulics	Electric vibrators; Hydraulic vibrators	50 h	500 h; 1000 h	2362731
SP 124i	19SP	1 - 9999	Hydraulics	Electric vibrators	50 h	500 h	2362727
			Hydraulics	Hydraulic vibrators	50 h	500 h	2362731
			Engine		50 h		2769854
			Engine			1000 h	2474461
			Engine			500 h	2465474
SP 124i US	19SP	1 - 9999	Hydraulics	Electric vibrators	50 h	500 h	2362727
			Hydraulics	Hydraulic vibrators	50 h	500 h	2362731
			Engine		50 h		2769854
			Engine			1000 h	2474461
			Engine			500 h	2465474
SP 124 L	18SP	1 - 9999	Engine		50 h		2196859
			Engine			500 h	2465441
			Hydraulics	Electric vibrators; Hydraulic vibrators	50 h	500 h; 1000 h	2362731
SP 124 Li	19SP	1 - 9999	Hydraulics	Electric vibrators	50 h	500 h	2362727

Due to possible technical changes, always refer to the information in the instruction manual.

FILTER PACKAGES

Series code	Serial code	Series range	Type	Application	First service	Replacement interval	Part no.
SP 124 Li	19SP	1 - 9999	Hydraulics	Hydraulic vibrators	50 h	500 h	2362731
			Engine		50 h		2769854
			Engine			1000 h	2474461
			Engine			500 h	2465474
SP 124 Li US	19SP	1 - 9999	Hydraulics	Electric vibrators	50 h	500 h	2362727
			Hydraulics	Hydraulic vibrators	50 h	500 h	2362731
			Engine		50 h		2769854
			Engine			1000 h	2474461
			Engine			500 h	2465474
2200 SM	0821	1 - 499	Engine			500 h; 1000 h	130344
			Hydraulics			1000 h	130345
			Engine		50 h	250 h	193133
			Hydraulics		50 h	500 h	193134
		500 - 9999	Engine		50 h	250 h	2110174
			Engine			500 h; 1000 h	2110175
			Hydraulics		50 h	500 h	2110454
			Hydraulics			1000 h	2110456
W 100 F	2610	1 - 9999	Engine		50 h		2196859
			Hydraulics			1000 h	172347
			Hydraulics			500 h	181355
			Engine			500 h	2060509
W 120 F	2610	1 - 9999	Engine		50 h		2196859
			Hydraulics			500 h	181355
			Engine			500 h	2060509
			Hydraulics			1000 h	172347
W 130 F	2610	1 - 9999	Engine		50 h		2196859

Due to possible technical changes, always refer to the information in the instruction manual.

FILTER PACKAGES

Series code	Serial code	Series range	Type	Application	First service	Replacement interval	Part no.
W 130 F	2610	1 - 9999	Hydraulics			1000 h	172347
			Hydraulics			500 h	181355
			Engine			500 h	2060509
W 150 Fi	1013	1 - 9999	Engine		50 h		2946907
			Engine			500 h	2946908
			Hydraulics			1000 h	3095658
			Hydraulics			500 h	3095656
			Engine			1000 h	2946909
W 150 F	0913	1 - 9999	Engine		50 h		2196859
			Hydraulics			1000 h	3095658
			Hydraulics			500 h	3095656
			Engine			500 h	2060509
W 195 i	2620	1 - 9999	Engine		50 h		3103931
			Engine			500 h	3103933
			Hydraulics			1000 h	WX3156622
			Hydraulics			500 h	WX3156620
			Engine			1000 h	3103934
W 205 i	2720	1 - 9999	Engine		50 h		3103931
			Engine			500 h	3103933
			Hydraulics			1000 h	WX3156622
			Hydraulics			500 h	WX3156620
			Engine			1000 h	3103934
W 215 i	2820	1 - 9999	Engine		50 h		3103931
			Engine			500 h	3103933
			Hydraulics			1000 h	WX3156622
			Hydraulics			500 h	WX3156620

Due to possible technical changes, always refer to the information in the instruction manual.

FILTER PACKAGES

Series code	Serial code	Series range	Type	Application	First service	Replacement interval	Part no.
W 215 i	2820	1 - 9999	Engine			1000 h	3103934
W 220 XFi	1422	1 - 9999	Engine			500 h	3119582
			Engine			1000 h	3119583
			Engine		50 h		3119581
			Hydraulics			1000 h	2871759
			Cabin			1000 h	2543761
			Hydraulics			500 h	2871758
W 210 F	2220	1 - 9999	Engine		50 h		2797347
			Engine			500 h	2797348
			Cabin			1000 h	2543761
			Hydraulics			500 h	2110454
			Hydraulics			1000 h	2680061
			Engine			1000 h	2797350
W 220 F	1022	1 - 4	Hydraulics			500 h	2110454
			Hydraulics			1000 h	2680061
		1 - 9999	Engine			1000 h	2797350
			Cabin			1000 h	2543761
			Engine			500 h	2797348
			Engine		50 h		2797347
		5 - 9999	Hydraulics			500 h	2871758
			Hydraulics			1000 h	2871759
W 250 Xfi	1522	1 - 9999	Engine		50 h		3133173
			Engine			500 h	3133175
			Cabin			1000 h	2543761
			Hydraulics			500 h	2871758
			Hydraulics			1000 h	2871759

Due to possible technical changes, always refer to the information in the instruction manual.

FILTER PACKAGES

Series code	Serial code	Series range	Type	Application	First service	Replacement interval	Part no.
W 250 Xfi	1522	1 - 9999	Engine			1000 h	3133176
KMA 240	07MS	1 - 9999	Engine			500 h	2103183
			Hydraulics			1000 h	2160674
			Hydraulics			500 h	2160672
KMA 240 i	08MS	1 - 9999	Engine		50 h		2219670
			Engine			500 h	2463271
			Hydraulics			1000 h	2160674
			Hydraulics			500 h	2160672
			Engine			1000 h	2530854
SP 154	24SP	1 - 9999	Engine		50 h		2769854
			Hydraulics	Electric vibrators	50 h	500 h; 1000 h	2362727
			Engine			500 h	2089511
			Engine			250 h	2089532
SP 154 i	25SP	1 - 5	Hydraulics	Electric vibrators	50 h	500 h; 1000 h	2362727
		1 - 9999	Engine			500 h	2465474
			Engine		50 h		2769854
			Engine			1000 h	2474461
		6 - 9999	Hydraulics	Electric vibrators	50 h	500 h; 1000 h	3139180
SP 20	28SP	1 - 9999	Engine		50 h		2196864
			Hydraulics			500 h; 1000 h	3139190
			Engine			500 h	2063467
SP 20 i	29SP	1 - 9999	Engine		50 h		2336956
			Hydraulics			500 h; 1000 h	3139190
			Engine			1000 h	3139305
			Engine			500 h	2336958

Original WIRTGEN

MAINTENANCE PARTS

MAINTENANCE PACKAGES

Genuine WIRTGEN GROUP maintenance packages are our comprehensive all-round package and contain all the air, fuel, engine oil and hydraulic filters as well as lubricants, oils and seals required for the machine's first service or the specified replacement interval, depending on the machine type (with the exception of hydraulic oil). In order to ensure that the machine performs at its best, we recommend that you adhere to the specified replacement intervals.

MAINTENANCE PACKAGES					
Series code	Serial code	Series range	First service	Replacement interval	Part no.
W 35 DC	0403	1 - 165	50 h	500 h	2103026
				1000 h	2103033
		166 - 9999	50 h	500 h	2103027
				1000 h	2103034
W 35 Ri	0703	1 - 9999		1000 h	2450026
			50 h	500 h	2450025
W 500	0605	5 - 275		250 h	2103055
				500 h	2103057
				1000 h	2103060
			50 h		2103050
		276 - 903	50 h		2103051
				1000 h	2103061
				500 h	2103058
				250 h	2103055
		904 - 9999	50 h		2103053
				500 h	2103059
				1000 h	2103062
				250 h	2103056
W 50	0805	1 - 9999		1000 h	2102987
			50 h	500 h	2102984

Due to possible technical changes, always refer to the information in the instruction manual.

MAINTENANCE PACKAGES

Series code	Serial code	Series range	First service	Replacement interval	Part no.
W 50	1005	1 - 27	50 h	500 h	2101448
				1000 h	2101455
		28 - 9999	50 h	500 h	2101449
				1000 h	2101456
W 50 DC	0905	1 - 234	50 h	500 h	2103063
				1000 h	2103069
		235 - 9999	50 h	500 h	2103064
				1000 h	2103070
W 50 DCi	1205	1 - 9999		1000 h	2336961
			50 h	500 h	2336960
W 50 R	1405	1 - 9999		1000 h	2391119
			50 h	500 h	2391117
W 50 Ri	1505	1 - 999		1000 h	2370087
		1 - 9999	50 h	500 h	2370086
		1001 - 9999		1000 h	2520130
W 50 H	1305	1 - 9999	50 h		2592684
				1000 h	2592689
				500 h	2592688
				250 h	2592686
W 55 H	1305	1 - 9999	50 h		2592684
				1000 h	2592689
				500 h	2592688
				250 h	2592686
W 60 R	1405	1 - 9999		1000 h	2391119
			50 h	500 h	2391117
W 60 Ri	1505	1 - 999		1000 h	2370087

Due to possible technical changes, always refer to the information in the instruction manual.

MAINTENANCE PARTS

MAINTENANCE PACKAGES					
Series code	Serial code	Series range	First service	Replacement interval	Part no.
W 60 Ri	1505	1 - 9999	50 h	500 h	2370086
		1001 - 9999		1000 h	2520130
W 60	0910	1 - 9999		1000 h	2103075
			50 h	500 h	2103072
W 60i	1210	1 - 9999	50 h		2217272
				1000 h	2217274
				500 h	2217273
W 100	0910	1 - 9999		1000 h	2103075
			50 h	500 h	2103072
W 100i	1210	1 - 9999	50 h		2217272
				1000 h	2217274
				500 h	2217273
W 100	1010	1 - 9999		1000 h	2103075
			50 h	500 h	2103072
W 100 H	1910	1 - 9999		1000 h	2586361
			50 h		2586367
				500 h	2586365
W 100 R	1510	1 - 9999		500 h	2103072
			50 h		2217862
				1000 h	2103075
W 100 Ri	1610	1 - 9999	50 h		2217272
				1000 h	2217274
				500 h	2217273
W 100 H	1410	1 - 9999	50 h		2330828
				500 h; 1000 h	2330836
				250 h	2330832

Due to possible technical changes, always refer to the information in the instruction manual.

MAINTENANCE PACKAGES

Series code	Serial code	Series range	First service	Replacement interval	Part no.
W 100 Fi	2710	1 - 9999	50 h		3020618
				1000 h	3020621
				500 h	3020619
W 120 R	1510	1 - 9999		500 h	2103072
			50 h		2217862
				1000 h	2103075
W 120 Ri	1610	1 - 9999	50 h		2217272
				1000 h	2217274
				500 h	2217273
W 130 H	1410	1 - 9999	50 h		2330828
				500 h; 1000 h	2330836
				250 h	2330832
	1910	1 - 9999		1000 h	2586361
			50 h		2586367
				500 h	2586365
W 1000 F	0710	1 - 74		1000 h	2103263
			50 h	500 h	2103254
		75 - 329		1000 h	2103264
			50 h	500 h	2103255
		330 - 559		1000 h	2103265
			50 h	500 h	2103256
		560 - 9999	50 h	500 h	2103257
				1000 h	2103266
W 100 F	0810	1 - 9999	50 h		2103071
				1000 h	2103078
				500 h	2103077

Due to possible technical changes, always refer to the information in the instruction manual.

MAINTENANCE PACKAGES					
Series code	Serial code	Series range	First service	Replacement interval	Part no.
W 100 Fi	1310	1 - 9999	50 h		2217276
				1000 h	2217279
				500 h	2217278
W 100 CF	1710	1 - 9999	50 h		2466540
				1000 h	2466542
				500 h	2466541
W 100 CFi	1810	1 - 9999	50 h		2428575
				1000 h	2428578
				500 h	2428576
W 1200 F	0710	1 - 74		1000 h	2103263
			50 h	500 h	2103254
		75 - 329	50 h	500 h	2103255
				1000 h	2103264
		330 - 559	50 h	500 h	2103256
				1000 h	2103265
		560 - 9999	50 h	500 h	2103257
				1000 h	2103266
W 120 F	0810	1 - 9999	50 h		2103071
				1000 h	2103078
				500 h	2103077
W 120 Fi	1310	1 - 9999	50 h		2217276
				1000 h	2217279
				500 h	2217278
W 120 CF	1710	1 - 9999	50 h		2466540
				1000 h	2466542
				500 h	2466541

Due to possible technical changes, always refer to the information in the instruction manual.

MAINTENANCE PACKAGES

Series code	Serial code	Series range	First service	Replacement interval	Part no.
W 120 CFi	1810	1 - 9999	50 h		2428575
				1000 h	2428578
				500 h	2428576
W 120 Fi	2710	1 - 9999	50 h		3020618
				1000 h	3020621
				500 h	3020619
W 120 FTi	2710	1 - 9999	50 h		3020618
				1000 h	3020621
				500 h	3020619
W 1300 F	0710	1 - 74		1000 h	2103263
			50 h	500 h	2103254
		75 - 329	50 h	500 h	2103255
				1000 h	2103264
		330 - 559	50 h	500 h	2103256
				1000 h	2103265
		560 - 9999	50 h	500 h	2103257
				1000 h	2103266
W 130 F	0810	1 - 9999	50 h		2103071
				1000 h	2103078
				500 h	2103077
W 130 Fi	1310	1 - 9999	50 h		2217276
				1000 h	2217279
				500 h	2217278
W 130 CF	1710	1 - 9999	50 h		2466540
				1000 h	2466542
				500 h	2466541

Due to possible technical changes, always refer to the information in the instruction manual.

MAINTENANCE PARTS

MAINTENANCE PACKAGES

Series code	Serial code	Series range	First service	Replacement interval	Part no.
W 130 CFi	1810	1 - 9999	50 h		2428575
				1000 h	2428578
				500 h	2428576
W 130 Fi	2710	1 - 9999	50 h		3020618
				1000 h	3020621
				500 h	3020619
W 1500	0820	1 - 638	50 h		2103178
				250 h	2103179
				500 h	2103180
				1000 h	2103181
		639 - 9999		250 h	2103179
			50 h		2181376
				500 h	2183826
				1000 h	2183827
W 150	0513	1 - 9999	50 h		2103071
				500 h	2103077
				1000 h	2103076
W 150i	0613	1 - 9999	50 h		2217276
				1000 h	2217280
				500 h	2217278
W 150 CF	0713	1 - 9999	50 h		2103071
				500 h	2103077
				1000 h	2103076
W 150 CFi	0813	1 - 9999	50 h		2428575
				1000 h	2428578
				500 h	2428576

Due to possible technical changes, always refer to the information in the instruction manual.

MAINTENANCE PACKAGES

Series code	Serial code	Series range	First service	Replacement interval	Part no.
W 1900	0820	1 - 638	50 h		2103178
				250 h	2103179
				500 h	2103180
				1000 h	2103181
		639 - 9999		250 h	2103179
			50 h		2181376
				500 h	2183826
				1000 h	2183827
	1020	1 - 9999	50 h		2586909
				250 h	2594221
				1000 h	2586913
				500 h	2586912
W 195	1820	1 - 9999	50 h		2142161
				1000 h	2591801
				500 h	2142163
W 2000	0620	1 - 865	50 h		2103158
				1000 h	2103165
				500 h	2103163
				250 h	2103161
		866 - 1438		250 h	2103162
				1000 h	2103166
				500 h	2103164
			50 h		2103159
		1439 - 9999		250 h	2103162
				1000 h	2183831
				500 h	2183830

Due to possible technical changes, always refer to the information in the instruction manual.

MAINTENANCE PACKAGES					
Series code	Serial code	Series range	First service	Replacement interval	Part no.
W 2000	0620	1439 - 9999	50 h		2183828
	1120	1 - 533	50 h		2586744
				500 h	2586756
				1000 h	2586763
				250 h	2592912
		534 - 635	50 h		2586745
				500 h	2586758
				250 h	2592916
				1000 h	2586764
		636 - 9999	50 h		2586746
				1000 h	2586765
				500 h	2586759
				250 h	2592917
W 200	1220	1 - 9999	50 h		2142161
				1000 h	2142164
				500 h	2142163
W 200i	1420	1 - 22		1000 h	2217286
			50 h		2217283
				500 h	2217285
		23 - 888		500 h	2547243
			50 h		2217283
				1000 h	2547244
		1001 - 9999		1000 h	2432910
			50 h		2432908
				500 h	2432909
W 200 F	2020	1 - 9999	50 h		2712799

Due to possible technical changes, always refer to the information in the instruction manual.

MAINTENANCE PACKAGES

Series code	Serial code	Series range	First service	Replacement interval	Part no.
W 200 F	2020	1 - 9999		1000 h	2712906
				500 h	2712826
W 200 Fi	2120	1 - 9999	50 h		2659845
				1000 h	2659848
				500 h	2659847
W 200 H	1620	1 - 9999	50 h		2347202
				1000 h	2347271
				500 h	2347204
W 200 Hi	1720	1 - 3		1000 h	2347196
			50 h		2347194
				500 h	2347195
		4 - 888		500 h	2547264
			50 h		2347194
				1000 h	2547265
		1001 - 9999		1000 h	2446682
			50 h		2446680
				500 h	2446681
W 205	2520	1 - 9999	50 h		2142161
				1000 h	2591801
				500 h	2142163
W 207 Fi	2120	1 - 9999	50 h		2659845
				500 h	2659847
				1000 h	2659848
W 2100	0921	1 - 129	50 h		2103296
				250 h	2103298
				1000 h	2103302

Due to possible technical changes, always refer to the information in the instruction manual.

MAINTENANCE PACKAGES

Series code	Serial code	Series range	First service	Replacement interval	Part no.
W 2100	0921	1 - 129		500 h	2103300
		130 - 384	50 h		2103297
				500 h	2103301
				250 h	2103299
				1000 h	2103303
		385 - 9999		250 h	2103299
				500 h	2183835
				1000 h	2183836
			50 h		2183833
W 210	1320	1 - 9999		1000 h	2142160
			50 h		2142158
				500 h	2142159
W 210i	1520	1 - 999	50 h		2217287
				1000 h	2217290
				500 h	2217288
		1001 - 9999	50 h		2403773
				1000 h	2403777
				500 h	2403775
W 210 Fi	2320	1 - 9999		500 h	2642783
			50 h		2642782
				1000 h	2642784
W 210 XP	2420	1 - 999		500 h	2592183
				250 h	2282574
				1000 h	2215626
			50 h		2592173
W 215	1920	1 - 9999	50 h		2142161

Due to possible technical changes, always refer to the information in the instruction manual.

MAINTENANCE PACKAGES

Series code	Serial code	Series range	First service	Replacement interval	Part no.
W 215	1920	1 - 9999		500 h	2142163
				1000 h	2591801
W 2200	0821	1 - 499		1000 h	2103194
				500 h	2103191
				250 h	2103189
			50 h		2103187
		500 - 9999	50 h		2110176
				1000 h	2110179
				500 h	2110178
				250 h	2110177
W 220	0522	1 - 9999		500 h	2215625
				250 h	2282574
				1000 h	2215626
			50 h		2215623
W 220i	0722	1 - 9999	50 h		2535018
				500 h	2545993
				1000 h	2545994
W 220 Fi	1122	1 - 158		1000 h	2797253
			50 h		2797251
				500 h	2797252
		159 - 9999		1000 h	3072137
				500 h	3072136
			50 h		3072135
W 250	0422	1 - 9999	50 h		2173466
				500 h	2173467
				1000 h	2173468

Due to possible technical changes, always refer to the information in the instruction manual.

MAINTENANCE PARTS

MAINTENANCE PACKAGES					
Series code	Serial code	Series range	First service	Replacement interval	Part no.
W 250i	0622	1 - 999	50 h		2275506
				500 h	2275507
				1000 h	2275508
		1001 - 9999	50 h		2466714
				500 h	2466715
				1000 h	2466716
W 250 Fi	1322	1 - 9999		1000 h	2740263
				500 h	2740262
			50 h		2740261
WR 2000	03WR	1 - 327		1000 h	2173660
				500 h	2173659
				250 h	2173658
			50 h		2173657
		328 - 9999		1000 h	2183840
				500 h	2183839
			50 h		2183837
				250 h	2173658
WR 200	06WR	1 - 9999		250 h	2173658
			50 h		2183837
				1000 h	2331710
				500 h	2183839
WR 200i	09WR	1 - 9999		1000 h	2331643
				500 h	2331642
			50 h		2331640
WR 200 XLi	09WR	1 - 9999	50 h		2331640
				1000 h	2331643

Due to possible technical changes, always refer to the information in the instruction manual.

MAINTENANCE PACKAGES

Series code	Serial code	Series range	First service	Replacement interval	Part no.
WR 200 XLi	09WR	1 - 9999		500 h	2331642
WR 2400	05WR	1 - 211		1000 h	2173665
				500 h	2173663
			50 h		2173661
				250 h	2173662
		212 - 9999		500 h	2183843
				1000 h	2183844
				250 h	2173662
			50 h		2183841
WR 240	07WR	1 - 9999		1000 h	2223470
				500 h	2223471
			50 h		2223472
WR 240i	10WR	1 - 83		1000 h	2262354
				500 h	2262357
		1 - 888	50 h		2262358
		84 - 888		500 h	2409537
				1000 h	2409536
		1001 - 9999		1000 h	2431648
			50 h		2444497
				500 h	2444496
WR 2500 S	04WR	1 - 350		1000 h	2173676
			50 h		2173672
				500 h	2173675
				250 h	2173673
		351 - 9999		1000 h	2173681
			50 h		2173677

Due to possible technical changes, always refer to the information in the instruction manual.

MAINTENANCE PARTS

MAINTENANCE PACKAGES					
Series code	Serial code	Series range	First service	Replacement interval	Part no.
WR 2500 S	04WR	351 - 9999		250 h	2252057
				500 h	2173678
WR 250	08WR	1 - 9999		250 h	2282574
			50 h		2262420
				1000 h	2262422
				500 h	2262421
WR 250i	11WR	1 - 9999		250 h	2500481
			50 h		2500480
				1000 h	2500484
				500 h	2500482
W 240 CR	03CR	1 - 9999		500 h	2712797
				1000 h	2712798
			50 h		2712795
				250 h	2712796
W 240 CRi	04CR	1 - 9999		500 h	2570004
				250 h	2570003
			50 h		2570002
				1000 h	2570005
W 380 CR	03CR	1 - 9999		500 h	2712797
				1000 h	2712798
				250 h	2712796
			50 h		2712795
W 380 CRi	04CR	1 - 9999		1000 h	2570005
				500 h	2570004
				250 h	2570003
			50 h		2570002

Due to possible technical changes, always refer to the information in the instruction manual.

MAINTENANCE PACKAGES

Series code	Serial code	Series range	First service	Replacement interval	Part no.
SP 15	12SP	1 - 9999	50 h		2357452
				500 h	2357454
				1000 h	2357458
SP 25	13SP	1 - 9999	50 h		2357459
				500 h	2357461
				1000 h	2357462
SP 25i	15SP	1 - 9999		1000 h	2355493
			50 h		2355491
				500 h	2355492
W 100 F	2610	1 - 9999	50 h		2466540
				1000 h	2466542
				500 h	2466541
W 120 F	2610	1 - 9999		1000 h	2466542
				500 h	2466541
			50 h		2466540
W 130 F	2610	1 - 9999		500 h	2466541
				1000 h	2466542
			50 h		2466540
W 150 Fi	1013	1 - 9999	50 h		3095662
				1000 h	3095665
				500 h	3095663
W 150 F	0913	1 - 9999	50 h		3095718
				500 h	3095720
				1000 h	3095721
W 195 i	2620	1 - 9999		1000 h	3103938
			50 h		3103936

Due to possible technical changes, always refer to the information in the instruction manual.

MAINTENANCE PACKAGES

Series code	Serial code	Series range	First service	Replacement interval	Part no.
W 195 i	2620	1 - 9999		500 h	3103937
W 205 i	2720	1 - 9999		1000 h	3103938
			50 h		3103936
				500 h	3103937
W 215 i	2820	1 - 9999	50 h		3103936
				500 h	3103937
				1000 h	3103938
W 220 XFi	1422	1 - 9999		1000 h	3120043
				500 h	3120042
			50 h		3120041
W 210 F	2220	1 - 9999	50 h		2899640
				500 h	2899841
				1000 h	2899842
W 220 F	1022	1 - 4	50 h		2797356
				500 h	2797357
				1000 h	2797358
		5 - 9999		1000 h	3072141
			50 h		3072138
				500 h	3072139
W 250 Xfi	1522	1 - 9999		1000 h	3133164
			50 h		3133162
				500 h	3133163
KMA 240	07MS	1 - 9999		500 h	2282428
			50 h		2282426
				1000 h	2282430
KMA 240 i	08MS	1 - 9999	50 h		2463277

Due to possible technical changes, always refer to the information in the instruction manual.

MAINTENANCE PACKAGES

Series code	Serial code	Series range	First service	Replacement interval	Part no.
KMA 240 i	08MS	1 - 9999		500 h	2463278
				1000 h	2463279
SP 154	24SP	1 - 9999	50 h		3141146
				500 h	3141149
SP 154 i	25SP	1 - 9999	50 h		3141146
				500 h	3141149
				1000 h	3141154
SP 20	28SP	1 - 9999	50 h		2357459
				500 h	2357461
				1000 h	2357462
SP 20 i	29SP	1 - 9999	50 h		2355491
				500 h	2577183
				1000 h	2577206

Original WIRTGEN

MAINTENANCE PARTS

LUBRICANTS

Filling or lubricating your machine with a lubricant which is specifically matched to your application is critical for the service life of the operational parts in combustion engines, hydraulic components, gear units and bearings.

WIRTGEN GROUP lubricants meet these requirements perfectly and are optimised for your WIRTGEN GROUP machine.

The best choice for ensuring the effectiveness of your machine and reducing maintenance costs long-term!

> Read more online for WIRTGEN

> Read more online for VÖGELE

> Read more online for HAMM

> Read more online for KLEEMANN

GEAR OILS			
Part	Properties	Container	Part no.
Gear oil 85W-90	Mineral oil-based axle gear oil for WIRTGEN drive systems. Do not use for WIRTGEN milling drum gearboxes (except 2500 SM, 4200 SM), HAMM vibratory bearings and drum drives or VÖGELE pump splitter gearboxes and drive systems.	5 l	2065030
		20 l	2065031
		208 l	2065032
High-performance gear oil PGLP 150	Exclusive fully synthetic gear oil tailored to high-performance use in WIRTGEN milling drum gearboxes. The high wettability of the lubricant ensures that the oil adheres well to gears and thus offers excellent wear protection. Do not use for HAMM vibratory bearings and drum drives.	5 l	2173019
		20 l	199752
		208 l	2120829
High-performance gear oil PGLP 220	Exclusive fully synthetic gear oil designed for high-performance use in WIRTGEN milling drum gearboxes as well as KLEEMANN conveyor and bevel gearboxes. The high wettability of the lubricant ensures that the oil adheres well to gears and thus offers excellent wear protection. Do not use for HAMM vibratory bearings and drum drives.	5 l	2170074
		20 l	2065033
		208 l	2065034
High-performance gear oil PGLP 460	Exclusive fully synthetic gear oil tailored to high-performance use in WIRTGEN hot recyclers and in S-Pack binding agent metering units. The high wettability of the lubricant ensures that the oil adheres well to gears and thus offers excellent wear protection. Do not use for HAMM vibratory bearings and drum drives.	5 l	2461524
		20 l	2120830
Multi gear oil VG 150	Mineral oil-based industrial gear oil for KLEEMANN cone crushers. The EP (extreme pressure) additives provide exceptional wear protection. Recommended for use in KLEEMANN MCO 9 EVO and MCO 11 PRO cone crushers.	20 l	2483280
		208 l	2483281

Due to possible technical changes, always refer to the information in the instruction manual.

GEAR OILS

Part	Properties	Container	Part no.
Special gear oil	Special fully synthetic multigrade gear oil for VÖGELE pump splitter gearboxes and drive systems, HAMM vibratory bearings as well as KLEEMANN travel drives. It has excellent cold-start behaviour and offers exceptional wear protection (for example in bearings, gear wheels) and is therefore particularly suitable for demanding applications.	5 l	1238051
		20 l	2065037
		208 l	2065038
Special gear oil for roller drum drives	Special fully synthetic multigrade gear oil for HAMM roller drum drives. It has excellent cold-start behaviour and offers exceptional wear protection (for example in bearings, gear wheels) and is therefore particularly suitable for demanding applications.	5 l	2571293
		20 l	2571294
		208 l	2571300

HYDRAULIC OILS

Part	Properties	Container	Part no.
Clutch fuid HLP 32	Hydraulic oil for use in KLEEMANN clutches Suitable for low temperatures (subpolar zone).	5 l	2268030
		20 l	2268032
Hydraulic Oil HVLP 46	Multigrade hydraulic oil Suitable for moderate temperatures.	20 l	2065028
		208 l	2065029
		1000 l IBC	2118571
Hydraulic oil HVLP 68	Multigrade hydraulic oil suitable for high temperatures (subtropics, tropics).	20 l	2118574
		208 l	2570591

COOLANTS

Part	Properties	Container	Part no.
Antifreezing Compound WG30	Coolants for protection against corrosion, overheating and frost (not suitable for use in 09WR (WR 200i) or KLEEMANN machines).	5 l	2173022
		20 l	2173023
		208 l	2173024
Antifreezing Compound WG48	Coolant for KLEEMANN machines to protect against corrosion, overheating and frost.	20 l	2535933
WG40 Anti-Freeze (pink)	Coolants to protect against corrosion, overheating and frost for Mercedes Benz diesel engines installed in 09WR (WR 200i).	20 l	2555507

MAINTENANCE PARTS

ENGINE OILS

Part	Properties	Container	Part no.
Engine oil low SAPS 10W-30	Semi-synthetic 'Low SAPS' engine oil (low sulphated ash, sulphur and phosphorus content) with Fuel Economy technology. Its low sulphated ash content ensures that burnt oil components do not prematurely clog the exhaust aftertreatment system's particulate filters (DPF).	5 l	2210320
		20 l	2210322
		208 l	2210323
		1000 l IBC	2118570
Engine oil low SAPS 10W-40	Synthetic low-viscosity engine oil with a comprehensive performance spectrum Fuel savings of up to 1% compared to a 15W-40 are possible. For use in markets in which low-sulphur fuel is used (e.g. Europe). Suitable for engines with exhaust gas aftertreatment (EU Stage 3b/ US EPA Tier 4i exhaust emission standard and above).	5 l	2346869
		20 l	2346870
		208 l	2346871
Engine oil low SAPS 15W-40	Mineral oil-based engine oil with higher quality base oil Meets the viscosity requirements of all WIRTGEN GROUP machines with Cummins engines. For use in markets in which low-sulphur fuel is used (e.g. Europe). Suitable for engines with exhaust gas aftertreatment (EU Stage 3b/ US EPA Tier 4i exhaust emission standard and above).	5 l	2573349
		20 l	2573350
		208 l	2573351
		1000 l IBC	2637453
Engine oil 10W-40	Synthetic low-viscosity engine oil for the longest oil change intervals For use in markets in which fuel with a higher sulphur content is used (e.g. India, China, Africa, South America). Suitable for engines without exhaust aftertreatment (up to and including EU Stage 3a/US EPA Tier 3 exhaust emission standards).	5 l	2112355
		20 l	2112354
		208 l	2219171
		1000 l IBC	2118569
Engine oil 15W-40	Mineral oil-based multigrade engine oil For use in markets where fuel with a higher sulphur content is used (for example India, China, Africa, South America). Suitable for engines without exhaust aftertreatment (up to and including EU Stage 3a/US EPA Tier 3 exhaust emission standards).	5 l	2065020
		20 l	2065025
		208 l	2065026
		1000 l IBC	2118572

GREASE

Part	Properties	Container	Part no.
Drive bearing grease	Special high-performance grease for use in HAMM bearings. Extremely pressure- and water-resistant.	1 kg	1227114

Due to possible technical changes, always refer to the information in the instruction manual.

GREASE

Part	Properties	Container	Part no.
Drum bearing grease	Exclusive grease for the lubrication of HAMM drum bearings. Extremely temperature- and pressure-resistant.	1 kg	1205757
Friction and roller bearing grease	High-performance polyurea grease with extreme pressure resistance and excellent wear protection. For the lubrication of VÖGELE roller bearings and sliding bearings that are subject to high thermal loads as well as BENNINGHOVEN applications. Wide operating temperature range from -25 °C to +180 °C (multigrade grease).	18 kg	2027868
		400 g	WX3178176
High-performance grease	Mineral oil-based lithium complex grease with excellent wear protection. For use on couplings and WIRTGEN remixers, for example. Wide operating temperature range from -20 °C to +150 °C (multigrade grease).	400 g	47259
KLEEMANN high-performance grease	Grease for KLEEMANN screen bearings.	380 g	M10021195
Multipurpose Moly grease	Mineral oil-based grease for lubricating high-load or shock-loaded bearings in damp, unfavourable conditions. Suitable for lubrication points with mixed friction, rough surfaces and as assembly grease (for example joint pins, wheel bearings). Not suitable for ball bearings and polished surfaces. Operating temperature from -25 °C to +120 °C.	18 kg	WX3327565
		180 kg	WX3327566
		400 g	2065035
Cone Moly grease	High viscosity lithium complex grease for lubricating KLEEMANN cone crushers. Molybdenum disulphide (MoS2) grease. For heavy-duty, slow-turning bearings and bolts. Not suitable for ball bearings and polished surfaces. Operating temperature from -20 °C to +150 °C.	18 kg	2368338
		400 g	2342967

OTHER LUBRICANTS

Part	Properties	Container	Part no.
AdBlue®/DEF	32.5% high-purity urea solution according to DIN 70070 / ISO 22241. AdBlue® is a registered trademark of the Association of the Automotive Industry (Verband der Automobilindustrie e. V.; VDA)	10 l	2434706
		210 l	2090870
		1000 l	2447156
Asphalt anti-stick	The perfect solution for pneumatic tyre and combination rollers from HAMM – prevents bitumen sticking to the rubber tyres. The emulsion is based on a non-toxic solution and is therefore quickly biodegradable.	5 l	2559307
		20 l	2559309
Silicone transformer liquid	DOW transformer oil can be used for the magnetic separator on KLEEMANN machines.	20 l	2346389

BIOLOGICAL HYDRAULIC OIL			
Part	Properties	Container	Part no.
Bio Hydraulic Oil HVLP 46	Biodegradable multigrade hydraulic oil Suitable for moderate temperatures.	20 l	2118575
		208 l	2270558

MILLING DRUM ACCESSORIES

Perfectly compatible components are crucial to ensure that the cutting process runs smoothly.

Genuine WIRTGEN toolholders are designed for a long service life and low maintenance requirements.

Our ejectors ensure that the material is smoothly and efficiently discharged from the milling drum housing.

> Read more online

EJECTORS

Genuine WIRTGEN ejectors are perfectly compatible with all components involved in the milling process and ensure that material is efficiently discharged from the milling drum housing.

In addition to our type 1 ejectors, the premium type 2 ejectors feature an enhanced conveyor unit for less wear on the milling drum tube and the cutting components.

EJECTORS

Part	Ejector type	Version	Width	For ejector width	Packaging unit	Requirement	Part no.
Ejectors	Type 2		250 mm				2140635
	Type 2		150 mm				2140636

Original WIRTGEN

MILLING DRUM ACCESSORIES

EJECTORS

Part	Ejector type	Version	Width	For ejector width	Packaging unit	Requirement	Part no.
Ejector holder	Type 2			150 mm; 200 mm; 250 mm			2140637
Ejectors	Type 2		200 mm				2617612
Mounting nut	Type 2	self-locking			1 pc.		30392
	Type 1						36105
Ejector holder	Type 1			250 mm			37972
Ejectors	Type 1		250 mm				44097
	Type 1		150 mm				45220
Fastening screw	Type 2				1 pc.		4620
	Type 1				1 pc.		4633
Lock washer	Type 1					1 piece per bolt connec-tion	5160
Ejector holder	Type 1			150 mm			52320

TOOLHOLDER

A high degree of operational reliability and extremely wear-resistant cutting tools play a critical role in precise and productive milling operations. The robust WIRTGEN toolholder systems are fitted with cutting tools that can be replaced quickly and easily right on the construction site.

TOOLHOLDER

Part	Toolholder system	Type	Version	Diameter	Size	Packaging unit	Part no.
Dummy upper part	HT3						101472
Round-shank pick holder	HT5		Welded tool-holders	22 mm			124218
Plug	HT3						126110

TOOLHOLDER

Part	Toolholder system	Type	Version	Diameter	Size	Packaging unit	Part no.
Round-shank pick holder	HT9		Welded tool-holders	25 mm			137503
Retaining bolt	HT22; HT11				M30x2		158501
Bottom part seal	HT11					1 pc.	158509
Edge protector	Welded tool-holders		Set of three welded tool-holders	22 mm			162459
Round-shank pick holder	HT11			20 mm			187002
Bottom part seal	HT11					100 pc.	187005
Round-shank pick holder	HT5	PLUS	Welded tool-holders	20 mm			194362
Dummy upper part	HT11						194755
Round-shank pick holder	HT3			20 mm			198000
	HT3			22 mm			198001
	HT11			22 mm			199001
	HT11			25 mm			199002
	HT02		Welded tool-holders	22 mm			2046579
	HT13		Welded tool-holders	25 mm			2068238
Plug	HT22; HT11					100 pc.	2197988
Bottom part seal	HT22					100 pc.	2197989
Plug	HT22; HT11					1 pc.	2197999
Dummy upper part	HT22						2198005
Bottom part seal	HT22					1 pc.	2198006
Round-shank pick holder	HT08		Welded tool-holders	20 mm			2321470
	HT22	PLUS		20 mm			2682808
	HT01		Welded tool-holders	20 mm			36780
	HT2			20 mm			49765
	HT03		Welded tool-holders	20 mm			5243
	HT02		Welded tool-holders	20 mm			5244

Original WIRTGEN

MILLING DRUM ACCESSORIES

TOOLHOLDER							
Part	Toolholder system	Type	Version	Diameter	Size	Packaging unit	Part no.
Retaining bolt	HT2				M20 x 2.5		56290
Round-shank pick holder	HT04		Welded tool-holders	13 mm			57629
Edge protector			Set of three welded tool-holders	20 mm			69902
Round-shank pick holder	HT4		Welded tool-holders	13 mm			72258
	HT5		Welded tool-holders	20 mm			74745
	HT2-170			20 mm			74801
Retaining bolt	HT3				M24x2		79998
Correcting Rround-shank pick holder	HT2			20 mm			82755
Dummy upper part	HT2						89888
Round-shank pick holder	HT2-170			22 mm			97180
	HT22	PLUS HD		20 mm			2958316
	HT22	PLUS HD		22 mm			2958450

MILLING DRUM HOUSINGS

The WIRTGEN milling drum housing contains the heart of your machines: the milling drum fitted with cutting tools.

In addition to the wear protection segments to protect the side plates, genuine WIRTGEN tungsten carbide scrapers on the rear rotor plate ensure that as little milled material as possible remains on the milled surface when the material is transported away via the conveyor unit system. This results in less cleaning work and a levelled milled surface. Thanks to perfectly harmonised components, milling drum housings from WIRTGEN offer maximum reliability and minimum machine downtimes in day-to-day operations on the construction site.

> Read more online

SCRAPER

Original WIRTGEN scrapers not only seal the milling chamber so that the milled material can be conveyed away cleanly, but also smooth the milled surface.

Type 1 scrapers are optimised to slide as smoothly as possible over the milled surface when scraping. In contrast, the modified shape, profile and position of the carbide in the type 2 version leads to a stronger scraping effect.

SCRAPER							
Series code	Serial code	Series range	Part	Scraper type	Milling width	Milling drum type	Part no.
W 500	0605	1 - 9999	Service package for scrapers	Type 1	500 mm		194396
W 50	0805, 1005	1 - 9999	Service package for scrapers	Type 1	500 mm		194390

Original WIRTGEN

MILLING DRUM HOUSINGS

SCRAPER							
Series code	Serial code	Series range	Part	Scraper type	Milling width	Milling drum type	Part no.
W 50 DC	0905	1 - 9999	Service package for scrapers	Type 1	500 mm		194390
W 50 DCi	1205	1 - 9999	Service package for scrapers	Type 1	500 mm		194390
W 50 R	1405	1 - 9999	Service package for scrapers	Type 1	600 mm		2465575
				Type 1	500 mm		2465572
W 50 Ri	1505	1 - 9999	Service package for scrapers	Type 1	600 mm		2465575
				Type 1	500 mm		2465572
W 50 H	1305	1 - 9999	Service package for scrapers	Type 1	500 mm		2590268
W 55 H	1305	1 - 9999	Service package for scrapers	Type 1	500 mm		2590268
W 60 R	1405	1 - 9999	Service package for scrapers	Type 1	600 mm		2465575
				Type 1	500 mm		2465572
W 60 Ri	1505	1 - 9999	Service package for scrapers	Type 1	600 mm		2465575
				Type 1	500 mm		2465572
W 100	0910	1 - 9999	Service package for scrapers	Type 1	1000 mm		2215148
W 100i	1210	1 - 9999	Service package for scrapers	Type 1	1000 mm		2215148
W 100	1010	1 - 9999	Service package for scrapers	Type 1	1000 mm		2215148
W 100 H	1910	1 - 9999	Service package for scrapers	Type 1	1300 mm		2590294
				Type 1	1000 mm		2590292
W 100	1110	1 - 9999	Service package for scrapers	Type 1	1000 mm		2215148
W 100 R	1510	1 - 9999	Service package for scrapers	Type 1	1000 mm		2215148
				Type 1	1200 mm		2532424
				Type 1	600 mm		2465575
W 100 Ri	1610	1 - 9999	Service package for scrapers	Type 1	1000 mm		2215148
				Type 1	1200 mm		2532424
				Type 1	600 mm		2465575
W 100 H	1410	1 - 9999	Service package for scrapers	Type 1	1300 mm		2590294
				Type 1	1000 mm		2590292

SCRAPER

Series code	Serial code	Series range	Part	Scraper type	Milling width	Milling drum type	Part no.
W 120 R	1510	1 - 9999	Service package for scrapers	Type 1	1000 mm		2215148
				Type 1	1200 mm		2532424
				Type 1	600 mm		2465575
W 120 Ri	1610	1 - 9999	Service package for scrapers	Type 1	1000 mm		2215148
				Type 1	1200 mm		2532424
				Type 1	600 mm		2465575
W 130 H	1410, 1910	1 - 9999	Service package for scrapers	Type 1	1300 mm		2590294
				Type 1	1000 mm		2590292
W 1000 F	0710	389 - 9999	Service package for scrapers	Type 2	1320 mm		194407
				Type 2	1000 mm		194426
				Type 2	1200 mm		194414
W 100 F	0810	1 - 9999	Service package for scrapers	Type 2	1300 mm		194407
				Type 2	1000 mm		194426
				Type 2	1200 mm		194414
W 100 Fi	1310	1 - 9999	Service package for scrapers	Type 2	1300 mm		194407
				Type 2	1000 mm		194426
				Type 2	1200 mm		194414
W 100 CF	1710	1 - 9999	Service package for scrapers	Type 2	1300 mm		194407
				Type 2	1000 mm		194426
				Type 2	1200 mm		194414
W 100 CFi	1810	1 - 9999	Service package for scrapers	Type 2	1300 mm		194407
				Type 2	1000 mm		194426
				Type 2	1200 mm		194414
W 1200 F	0710	389 - 9999	Service package for scrapers	Type 2	1320 mm		194407
				Type 2	1000 mm		194426
				Type 2	1200 mm		194414

Original WIRTGEN

MILLING DRUM HOUSINGS

SCRAPER							
Series code	Serial code	Series range	Part	Scraper type	Milling width	Milling drum type	Part no.
W 120 F	0810	1 - 9999	Service package for scrapers	Type 2	1300 mm		194407
				Type 2	1000 mm		194426
				Type 2	1200 mm		194414
W 120 Fi	1310	1 - 9999	Service package for scrapers	Type 2	1300 mm		194407
				Type 2	1000 mm		194426
				Type 2	1200 mm		194414
W 120 CF	1710	1 - 9999	Service package for scrapers	Type 2	1300 mm		194407
				Type 2	1000 mm		194426
				Type 2	1200 mm		194414
W 120 CFi	1810	1 - 9999	Service package for scrapers	Type 2	1300 mm		194407
				Type 2	1000 mm		194426
				Type 2	1200 mm		194414
W 1300 F	0710	389 - 9999	Service package for scrapers	Type 2	1320 mm		194407
				Type 2	1000 mm		194426
				Type 2	1200 mm		194414
W 130 F	0810	1 - 9999	Service package for scrapers	Type 2	1300 mm		194407
				Type 2	1000 mm		194426
				Type 2	1200 mm		194414
W 130 Fi	1310	1 - 9999	Service package for scrapers	Type 2	1300 mm		194407
				Type 2	1000 mm		194426
				Type 2	1200 mm		194414
W 130 CF	1710	1 - 9999	Service package for scrapers	Type 2	1300 mm		194407
				Type 2	1000 mm		194426
				Type 2	1200 mm		194414
W 130 CFi	1810	1 - 9999	Service package for scrapers	Type 2	1300 mm		194407
				Type 2	1200 mm		194414

SCRAPER

Series code	Serial code	Series range	Part	Scraper type	Milling width	Milling drum type	Part no.
W 130 CFi	1810	1 - 9999	Service package for scrapers	Type 2	1000 mm		194426
W 1500	0820	1 - 9999	Service package for scrapers	Type 2	1500 mm		194408
				Type 2	1300 mm		194407
W 150	0513	1 - 9999	Service package for scrapers	Type 1	1500 mm		2116636
				Type 1	1200 mm		2116633
W 150i	0613	1 - 9999	Service package for scrapers	Type 1	1500 mm		2116636
				Type 1	1200 mm		2116633
W 150 CF	0713	1 - 9999	Service package for scrapers	Type 1	1500 mm		2116636
W 150 CFi	0813	1 - 9999	Service package for scrapers	Type 1	1500 mm		2116636
W 1900	0820, 0920, 1020	1 - 9999	Service package for scrapers	Type 2	2200 mm		2138933
				Type 2	2000 mm		194410
W 195	1820	1 - 9999	Service package for scrapers	Type 1	2000 mm		2172937
				Type 1	2200 mm		2172942
W 2000	0620	1 - 9999	Service package for scrapers	Type 2	2000 mm		194410
				Type 2	2200 mm		2138933
	1120	1 - 9999	Service package for scrapers	Type 2	2200 mm		2138933
				Type 2	2000 mm		194410
W 200	1220	1 - 9999	Service package for scrapers	Type 1	2000 mm		2172937
				Type 1	2200 mm		2172942
W 200i	1420	1 - 9999	Service package for scrapers	Type 1	2000 mm		2172937
				Type 1	2200 mm		2172942
W 200 H	1620	1 - 9999	Service package for scrapers	Type 1	2100 mm		2465591
W 200 Hi	1720	1 - 9999	Service package for scrapers	Type 1	2100 mm		2465591
W 205	2520	1 - 9999	Service package for scrapers	Type 1	2000 mm		2172937
				Type 1	2200 mm		2172942
W 2100	0921	1 - 9999	Service package for scrapers	Type 2	2000 mm		194410

Original WIRTGEN

MILLING DRUM HOUSINGS

SCRAPER							
Series code	Serial code	Series range	Part	Scraper type	Milling width	Milling drum type	Part no.
W 2100	0921	1 - 9999	Service package for scrapers	Type 2	2100 mm		194411
				Type 2	2200 mm		194409
W 210	1320	1 - 9999	Service package for scrapers	Type 1	2000 mm		2172937
				Type 1	2200 mm		2172942
W 210i	1520	1 - 9999	Service package for scrapers	Type 1	2000 mm		2172937
				Type 1	2200 mm		2172942
W 210 XP	2420	1 - 9999	Service package for scrapers	Type 1	2200 mm		2172942
				Type 1	2000 mm		2172937
W 215	1920	1 - 9999	Service package for scrapers	Type 1	2200 mm		2172942
				Type 1	2000 mm		2172937
W 2200	0821	1 - 9999	Service package for scrapers	Type 2	2200 mm		194409
W 220	0522	1 - 9999	Service package for scrapers	Type 1	2500 mm	FCS	2650774
				Type 1	2200 mm	FCS	2650760
				Type 1	2200 mm		2172942
W 220i	0722	1 - 9999	Service package for scrapers	Type 1	2500 mm	FCS	2650774
				Type 1	2200 mm	FCS	2650760
				Type 1	2200 mm		2172942
W 250	0422	1 - 9999	Service package for scrapers	Type 1	2200 mm	FCS	2650760
				Type 1	2500 mm	FCS	2650774
W 250i	0622	1 - 9999	Service package for scrapers	Type 1	2200 mm	FCS	2650760
				Type 1	2500 mm	FCS	2650774

WEAR PROTECTION SEGMENTS

WIRTGEN wear protection segments are made of particularly wear-resistant material. They not only protect the milling drum housing from normal wear and tear, but are also easy to replace.

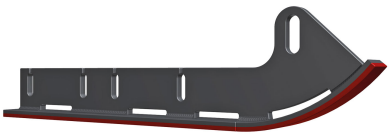

WEAR PROTECTION SEGMENTS							
Series code	Serial code	Part	Version	Length	Width	Details	Part no.
W 50 R	1405	Material de-pressor				**Requirement | Milling width** 4 pc. | 500 mm; 4 pc. | 600 mm	2281665
		Side plate	welded			**Position | Milling width** left | 500 mm; left | 600 mm	2139616
W 50 Ri	1505	Material de-pressor				**Requirement | Milling width** 4 pc. | 500 mm; 4 pc. | 600 mm	2281665
		Side plate	welded			**Position | Milling width** left | 500 mm; left | 600 mm	2139616
W 60 R	1405	Side plate	welded			**Position | Milling width** left | 500 mm; left | 600 mm	2139616
W 60 Ri	1505	Side plate	welded			**Position | Milling width** left | 500 mm; left | 600 mm	2139616
W 100 CF	1710	Material de-pressor		50 mm	490 mm	**Requirement | Milling width** 2 pc. | 1000 mm; 2 pc. | 1200 mm; 2 pc. | 1300 mm	157828
		Side plate	welded			**Position | Milling width** left | 1000 mm	2465624
			welded			**Position | Milling width** left | 1200 mm; left | 1300 mm	2465628
			welded			**Position | Milling width** right | 1000 mm; right | 1200 mm; right | 1300 mm	2465621
W 100 CFi	1810	Material de-pressor		50 mm	490 mm	**Requirement | Milling width** 2 pc. | 1000 mm; 2 pc. | 1200 mm; 2 pc. | 1300 mm	157828

Original WIRTGEN

MILLING DRUM HOUSINGS

WEAR PROTECTION SEGMENTS							
Series code	Serial code	Part	Version	Length	Width	Details	Part no.
W 100 CFi	1810	Side plate	welded			**Position | Milling width** left | 1000 mm	2465624
			welded			**Position | Milling width** right | 1000 mm; right | 1200 mm; right | 1300 mm	2465621
			welded			**Position | Milling width** left | 1200 mm; left | 1300 mm	2465628
W 120 CF	1710	Material de-pressor		50 mm	490 mm	**Requirement | Milling width** 2 pc. | 1000 mm; 2 pc. | 1200 mm; 2 pc. | 1300 mm	157828
		Side plate	welded			**Position | Milling width** left | 1000 mm	2465624
			welded			**Position | Milling width** left | 1200 mm; left | 1300 mm	2465628
			welded			**Position | Milling width** right | 1000 mm; right | 1200 mm; right | 1300 mm	2465621
W 120 CFi	1810	Material de-pressor		50 mm	490 mm	**Requirement | Milling width** 2 pc. | 1000 mm; 2 pc. | 1200 mm; 2 pc. | 1300 mm	157828
		Side plate	welded			**Position | Milling width** left | 1200 mm; left | 1300 mm	2465628
			welded			**Position | Milling width** right | 1000 mm; right | 1200 mm; right | 1300 mm	2465621
			welded			**Position | Milling width** left | 1000 mm	2465624
W 130 CF	1710	Material de-pressor		50 mm	490 mm	**Requirement | Milling width** 2 pc. | 1000 mm; 2 pc. | 1200 mm; 2 pc. | 1300 mm	157828
		Side plate	welded			**Position | Milling width** right | 1000 mm; right | 1200 mm; right | 1300 mm	2465621
			welded			**Position | Milling width** left | 1000 mm	2465624
			welded			**Position | Milling width** left | 1200 mm; left | 1300 mm	2465628

WEAR PROTECTION SEGMENTS

Series code	Serial code	Part	Version	Length	Width	Details	Part no.
W 130 CFi	1810	Material de-pressor		50 mm	490 mm	**Requirement | Milling width** 2 pc. | 1000 mm; 2 pc. | 1200 mm; 2 pc. | 1300 mm	157828
		Side plate	welded			**Position | Milling width** right | 1000 mm; right | 1200 mm; right | 1300 mm	2465621
			welded			**Position | Milling width** left | 1200 mm; left | 1300 mm	2465628
			welded			**Position | Milling width** left | 1000 mm	2465624
W 1500	0820	Material de-pressor		50 mm	490 mm	**Requirement | Position** 1 pc. | front left	157828
		Side plate		40 mm	180 mm	**Requirement | Position** 1 pc. | rear left; 1 pc. | rear right	2069177
				50 mm	625 mm	**Requirement | Position** 1 pc. | front right	155630
W 150	0513	Material de-pressor		50 mm	490 mm	**Requirement | Position | Milling width** 1 pc. | front left | 1200 mm; 1 pc. | front right | 1200 mm; 1 pc. | front right | 1500 mm	157828
				40 mm	170 mm	**Requirement | Milling width** 2 pc. | 1200 mm; 2 pc. | 1500 mm	2129390
		Side plate		50 mm	350 mm	**Requirement | Position | Milling width** 1 pc. | rear left | 1200 mm; 1 pc. | rear left | 1500 mm	2120385
				50 mm	450 mm	**Requirement | Position | Milling width** 2 pc. | rear right | 1200 mm; 2 pc. | rear right | 1500 mm	2106074
				50 mm	625 mm	**Requirement | Position | Milling width** 1 pc. | front left | 1500 mm	155630
W 150i	0613	Material de-pressor		40 mm	170 mm	**Requirement | Milling width** 2 pc. | 1200 mm; 2 pc. | 1500 mm	2129390
				50 mm	490 mm	**Requirement | Position | Milling width** 1 pc. | front left | 1200 mm; 1 pc. | front right | 1200 mm; 1 pc. | front right | 1500 mm	157828

Original WIRTGEN

MILLING DRUM HOUSINGS

WEAR PROTECTION SEGMENTS							
Series code	Serial code	Part	Version	Length	Width	Details	Part no.
W 150i	0613	Side plate		50 mm	350 mm	**Requirement | Position | Milling width** 1 pc. | rear left | 1200 mm; 1 pc. | rear left | 1500 mm	2120385
				50 mm	450 mm	**Requirement | Position | Milling width** 2 pc. | rear right | 1200 mm; 2 pc. | rear right | 1500 mm	2106074
				50 mm	625 mm	**Requirement | Position | Milling width** 1 pc. | front left | 1500 mm	155630
W 150 CF	0713	Material de-pressor		40 mm	170 mm	**Requirement | Milling width** 2 pc. | 1200 mm; 2 pc. | 1500 mm; 2 pc. | 1800 mm	2129390
				50 mm	490 mm	**Requirement | Position** 1 pc. | front left	157828
		Side plate		50 mm	1160 mm	**Requirement | Position** 1 pc. | rear left	2431428
				50 mm	625 mm	**Requirement | Position** 1 pc. | front right	155630
				50 mm	280 mm	**Requirement | Position** 1 pc. | rear right	2431013
				50 mm	450 mm	**Requirement | Position** 2 pc. | rear right	2106074
W 150 CFi	0813	Material de-pressor		40 mm	170 mm	**Requirement | Milling width** 2 pc. | 1200 mm; 2 pc. | 1500 mm; 2 pc. | 1800 mm	2129390
				50 mm	490 mm	**Requirement | Position** 1 pc. | front left	157828
		Side plate		50 mm	625 mm	**Requirement | Position** 1 pc. | front right	155630
				50 mm	450 mm	**Requirement | Position** 2 pc. | rear right	2106074
				50 mm	280 mm	**Requirement | Position** 1 pc. | rear right	2431013
				50 mm	1160 mm	**Requirement | Position** 1 pc. | rear left	2431428
W 1900	0820	Material de-pressor		50 mm	490 mm	**Requirement | Position** 1 pc. | front left	157828
		Side plate		40 mm	180 mm	**Requirement | Position** 1 pc. | rear left; 1 pc. | rear right	2069177
				50 mm	625 mm	**Requirement | Position** 1 pc. | front right	155630
	0920, 1020	Side plate		40 mm	180 mm	**Requirement | Position** 2 pc. | rear left; 2 pc. | rear right	2069177

WEAR PROTECTION SEGMENTS

Series code	Serial code	Part	Version	Length	Width	Details	Part no.
W 1900	0920, 1020	Side plate		50 mm	625 mm	**Requirement | Position** 2 pc. | front left; 2 pc. | front right	155630
W 195	1820	Material de-pressor		40 mm	170 mm	**Requirement | Milling width** 6 pc. | 2000 mm; 6 pc. | 2200 mm	2129390
		Side plate		50 mm	200 mm	**Requirement | Position | Milling width** 1 pc. | rear left | 2000 mm; 1 pc. | rear left | 2200 mm	2111404
				50 mm	625 mm	**Requirement | Position | Milling width** 1 pc. | front left | 2000 mm; 1 pc. | front left | 2200 mm; 1 pc. | front right | 2000 mm; 1 pc. | front right | 2200 mm	155630
				50 mm	450 mm	**Requirement | Position | Milling width** 1 pc. | rear left | 2000 mm; 1 pc. | rear left | 2200 mm; 2 pc. | rear right | 2000 mm; 2 pc. | rear right | 2200 mm	2106074
W 2000	0620, 1120	Material de-pressor		40 mm	170 mm	**Requirement | Milling width** 8 pc. | 2000 mm; 8 pc. | 2200 mm	2129390
		Side plate		50 mm	625 mm	**Requirement | Position** 2 pc. | front left; 2 pc. | front right	155630
				40 mm	180 mm	**Requirement | Position** 2 pc. | rear left; 2 pc. | rear right	2069177
W 200	1220	Scraper		40 mm	100 mm	**Requirement | Position | Milling width** 2 pc. | rear left | 1500 mm	56731
		Material de-pressor		40 mm	170 mm	**Requirement | Milling width** 6 pc. | 1500 mm; 6 pc. | 2000 mm; 6 pc. | 2200 mm	2129390
		Side plate		50 mm	450 mm	**Requirement | Position | Milling width** 1 pc. | rear left | 1500 mm; 1 pc. | rear left | 2000 mm; 1 pc. | rear left | 2200 mm; 2 pc. | rear right | 1500 mm; 2 pc. | rear right | 2000 mm; 2 pc. | rear right | 2200 mm	2106074

Original WIRTGEN

MILLING DRUM HOUSINGS

WEAR PROTECTION SEGMENTS							
Series code	Serial code	Part	Version	Length	Width	Details	Part no.
W 200	1220	Side plate		50 mm	625 mm	**Requirement | Position | Milling width** 1 pc. | front left | 1500 mm; 1 pc. | front left | 2000 mm; 1 pc. | front left | 2200 mm; 1 pc. | front right | 1500 mm; 1 pc. | front right | 2000 mm; 1 pc. | front right | 2200 mm	155630
				50 mm	200 mm	**Requirement | Position | Milling width** 1 pc. | rear left | 2000 mm; 1 pc. | rear left | 2200 mm	2111404
W 200i	1420	Scraper		40 mm	100 mm	**Requirement | Position | Milling width** 2 pc. | rear left | 1500 mm	56731
		Material de-pressor		40 mm	170 mm	**Requirement | Milling width** 6 pc. | 1500 mm; 6 pc. | 2000 mm; 6 pc. | 2200 mm	2129390
		Side plate		50 mm	450 mm	**Requirement | Position | Milling width** 1 pc. | rear left | 1500 mm; 1 pc. | rear left | 2000 mm; 1 pc. | rear left | 2200 mm; 2 pc. | rear right | 1500 mm; 2 pc. | rear right | 2000 mm; 2 pc. | rear right | 2200 mm	2106074
				50 mm	625 mm	**Requirement | Position | Milling width** 1 pc. | front left | 1500 mm; 1 pc. | front left | 2000 mm; 1 pc. | front left | 2200 mm; 1 pc. | front right | 1500 mm; 1 pc. | front right | 2000 mm; 1 pc. | front right | 2200 mm	155630
				50 mm	200 mm	**Requirement | Position | Milling width** 1 pc. | rear left | 2000 mm; 1 pc. | rear left | 2200 mm	2111404
W 200 H	1620	Material de-pressor		40 mm	170 mm	**Requirement | Milling width** 4 pc. | 2100 mm	2129390
		Side plate		50 mm	200 mm	**Requirement | Position** 1 pc. | rear left; 1 pc. | rear right	2111404
				50 mm	625 mm	**Requirement | Position** 1 pc. | front left; 1 pc. | front right	155630
				50 mm	450 mm	**Requirement | Position** 2 pc. | rear left; 2 pc. | rear right	2106074

WEAR PROTECTION SEGMENTS

Series code	Serial code	Part	Version	Length	Width	Details	Part no.
W 200 Hi	1720	Material de-pressor		40 mm	170 mm	**Requirement | Milling width** 4 pc. | 2100 mm	2129390
		Side plate		50 mm	200 mm	**Requirement | Position** 1 pc. | rear left; 1 pc. | rear right	2111404
				50 mm	625 mm	**Requirement | Position** 1 pc. | front left; 1 pc. | front right	155630
				50 mm	450 mm	**Requirement | Position** 2 pc. | rear left; 2 pc. | rear right	2106074
W 205	2520	Material de-pressor		40 mm	170 mm	**Requirement | Milling width** 6 pc. | 2000 mm; 6 pc. | 2200 mm	2129390
		Side plate		50 mm	200 mm	**Requirement | Position | Milling width** 1 pc. | rear left | 2000 mm; 1 pc. | rear left | 2200 mm	2111404
				50 mm	625 mm	**Requirement | Position | Milling width** 1 pc. | front left | 2000 mm; 1 pc. | front left | 2200 mm; 1 pc. | front right | 2000 mm; 1 pc. | front right | 2200 mm	155630
				50 mm	450 mm	**Requirement | Position | Milling width** 1 pc. | rear left | 2000 mm; 1 pc. | rear left | 2200 mm; 2 pc. | rear right | 2000 mm; 2 pc. | rear right | 2200 mm	2106074
W 2100	0921	Material de-pressor		40 mm	170 mm	**Requirement | Milling width** 8 pc. | 2200 mm	2129390
		Side plate		50 mm	625 mm	**Requirement | Position** 2 pc. | front left; 2 pc. | front right	155630
				40 mm	180 mm	**Requirement | Position** 2 pc. | rear left; 2 pc. | rear right	2069177
W 210	1320	Scraper		40 mm	100 mm	**Requirement | Position | Milling width** 2 pc. | rear left | 1500 mm	56731
		Material de-pressor		40 mm	170 mm	**Requirement | Milling width** 6 pc. | 1500 mm; 6 pc. | 2000 mm; 6 pc. | 2200 mm	2129390

Original WIRTGEN

MILLING DRUM HOUSINGS

WEAR PROTECTION SEGMENTS							
Series code	Serial code	Part	Version	Length	Width	Details	Part no.
W 210	1320	Side plate		50 mm	450 mm	**Requirement | Position | Milling width** 1 pc. | rear left | 1500 mm; 1 pc. | rear left | 2000 mm; 1 pc. | rear left | 2200 mm; 2 pc. | rear right | 1500 mm; 2 pc. | rear right | 2000 mm; 2 pc. | rear right | 2200 mm	2106074
				50 mm	625 mm	**Requirement | Position | Milling width** 1 pc. | front left | 1500 mm; 1 pc. | front left | 2000 mm; 1 pc. | front left | 2200 mm; 1 pc. | front right | 1500 mm; 1 pc. | front right | 2000 mm; 1 pc. | front right | 2200 mm	155630
				50 mm	200 mm	**Requirement | Position | Milling width** 1 pc. | rear left | 2000 mm; 1 pc. | rear left | 2200 mm	2111404
W 210i	1520	Scraper		40 mm	100 mm	**Requirement | Position | Milling width** 2 pc. | rear left | 1500 mm	56731
		Material de-pressor		40 mm	170 mm	**Requirement | Milling width** 6 pc. | 1500 mm; 6 pc. | 2000 mm; 6 pc. | 2200 mm	2129390
		Side plate		50 mm	450 mm	**Requirement | Position | Milling width** 1 pc. | rear left | 1500 mm; 1 pc. | rear left | 2000 mm; 1 pc. | rear left | 2200 mm; 2 pc. | rear right | 1500 mm; 2 pc. | rear right | 2000 mm; 2 pc. | rear right | 2200 mm	2106074
				50 mm	625 mm	**Requirement | Position | Milling width** 1 pc. | front left | 1500 mm; 1 pc. | front left | 2000 mm; 1 pc. | front left | 2200 mm; 1 pc. | front right | 1500 mm; 1 pc. | front right | 2000 mm; 1 pc. | front right | 2200 mm	155630
				50 mm	200 mm	**Requirement | Position | Milling width** 1 pc. | rear left | 2000 mm; 1 pc. | rear left | 2200 mm	2111404
W 210 XP	2420	Scraper		40 mm	100 mm	**Requirement | Position | Milling width** 2 pc. | rear left | 1500 mm	56731

WEAR PROTECTION SEGMENTS

Series code	Serial code	Part	Version	Length	Width	Details	Part no.
W 210 XP	2420	Material de-pressor		40 mm	170 mm	**Requirement | Milling width** 6 pc. | 1500 mm; 6 pc. | 2000 mm; 6 pc. | 2200 mm	2129390
		Side plate		50 mm	200 mm	**Requirement | Position | Milling width** 1 pc. | rear left | 2000 mm; 1 pc. | rear left | 2200 mm	2111404
				50 mm	625 mm	**Requirement | Position | Milling width** 1 pc. | front left | 1500 mm; 1 pc. | front left | 2000 mm; 1 pc. | front left | 2200 mm; 1 pc. | front right | 1500 mm; 1 pc. | front right | 2000 mm; 1 pc. | front right | 2200 mm	155630
				50 mm	450 mm	**Requirement | Position | Milling width** 1 pc. | rear left | 1500 mm; 1 pc. | rear left | 2000 mm; 1 pc. | rear left | 2200 mm; 2 pc. | rear right | 1500 mm; 2 pc. | rear right | 2000 mm; 2 pc. | rear right | 2200 mm	2106074
W 215	1920	Material de-pressor		40 mm	170 mm	**Requirement | Milling width** 6 pc. | 2000 mm; 6 pc. | 2200 mm	2129390
		Side plate		50 mm	200 mm	**Requirement | Position | Milling width** 1 pc. | rear left | 2000 mm; 1 pc. | rear left | 2200 mm	2111404
				50 mm	625 mm	**Requirement | Position | Milling width** 1 pc. | front left | 2000 mm; 1 pc. | front left | 2200 mm; 1 pc. | front right | 2000 mm; 1 pc. | front right | 2200 mm	155630
				50 mm	450 mm	**Requirement | Position | Milling width** 1 pc. | rear left | 2000 mm; 1 pc. | rear left | 2200 mm; 2 pc. | rear right | 2000 mm; 2 pc. | rear right | 2200 mm	2106074
W 2200	0821	Material de-pressor		40 mm	170 mm	**Requirement | Milling width** 8 pc. | 2200 mm	2129390
		Side plate		50 mm	625 mm	**Requirement | Position** 2 pc. | front left; 2 pc. | front right	155630
				40 mm	180 mm	**Requirement | Position** 2 pc. | rear left; 2 pc. | rear right	2069177

Original WIRTGEN

MILLING DRUM HOUSINGS

WEAR PROTECTION SEGMENTS							
Series code	Serial code	Part	Version	Length	Width	Details	Part no.
W 2200	0821	Side plate		100 mm	1700 mm	**Requirement | Position** 2 pc. | front left; 2 pc. | front right	155628
				50 mm	1700 mm	**Requirement | Position** 2 pc. | front left; 2 pc. | front right	196501
W 220	0522	Material de-pressor		40 mm	170 mm	**Requirement | Milling width** 6 pc. | 2200 mm	2129390
		Side plate		50 mm	200 mm	**Requirement | Position** 1 pc. | rear left	2111404
				50 mm	625 mm	**Requirement | Position** 1 pc. | front left; 1 pc. | front right	155630
				50 mm	450 mm	**Requirement | Position** 1 pc. | rear left; 2 pc. | rear right	2106074
W 220i	0722	Material de-pressor		40 mm	170 mm	**Requirement | Milling width** 6 pc. | 2200 mm	2129390
		Side plate		50 mm	200 mm	**Requirement | Position** 1 pc. | rear left	2111404
				50 mm	625 mm	**Requirement | Position** 1 pc. | front left; 1 pc. | front right	155630
				50 mm	450 mm	**Requirement | Position** 1 pc. | rear left; 2 pc. | rear right	2106074
W 250	0422	Material de-pressor		40 mm	170 mm	**Requirement | Milling width** 6 pc. | 2200 mm	2129390
		Side plate		50 mm	200 mm	**Requirement | Position** 1 pc. | rear left	2111404
				50 mm	625 mm	**Requirement | Position** 1 pc. | front left; 1 pc. | front right	155630
				50 mm	450 mm	**Requirement | Position** 1 pc. | rear left; 2 pc. | rear right	2106074
W 250i	0622	Material de-pressor		40 mm	170 mm	**Requirement | Milling width** 6 pc. | 2200 mm	2129390
		Side plate		50 mm	200 mm	**Requirement | Position** 1 pc. | rear left	2111404
				50 mm	625 mm	**Requirement | Position** 1 pc. | front left; 1 pc. | front right	155630

WEAR PROTECTION SEGMENTS

Series code	Serial code	Part	Version	Length	Width	Details	Part no.
W 250i	0622	Side plate		50 mm	450 mm	**Requirement | Position** 1 pc. | rear left; 2 pc. | rear right	2106074

Original WIRTGEN

MILLING DRUM DRIVE

WIRTGEN is known for its outstanding quality in the field of cutting technology. In addition to the cutting tools, the milling drum is an essential component of this key technology. The number of revolutions, speed and torque of the milling drum are determined by the milling drum drive. The sophisticated interaction of the various components, such as belt pulleys and power belts, results in the smooth operation of the milling drum and thus creates a flawless milling process – all to the benefit of your milling quality.

> Read more online

POWER BELTS

WIRTGEN's power belts, which are designed to be perfectly compatible with the belt pulleys and optimised in terms of their coefficients of friction, ensure that even high tensile forces can be transmitted safely.

POWER BELTS						
Series code	Serial code	Series range	Requirement	Milling width	Position	Part no.
W 35 DC	0403	1 - 9999			Power belt	176066
W 35 Ri	0703	1 - 9999			Power belt	176066
W 50	0805, 1005	1 - 9999			Power belt	171089

POWER BELTS

Series code	Serial code	Series range	Requirement	Milling width	Position	Part no.
W 50 DC	0905	1 - 9999			Power belt	171088
W 50 DCi	1205	1 - 9999			Power belt	171088
W 50 R	1405	1 - 9999			Power belt	2365560
W 50 Ri	1505	1 - 9999			Power belt	2365560
W 60 R	1405	1 - 9999			Power belt	2365560
W 60 Ri	1505	1 - 9999			Power belt	2365560
W 60	0910	1 - 9999			Power belt	2276826
W 60i	1210	1 - 9999			Power belt	2276826
W 100	0910	1 - 9999			Power belt	2276826
W 100i	1210	1 - 9999			Power belt	2276826
W 100	1010	1 - 9999			Power belt	2276826
W 100 L	1010	1 - 9999			Power belt	2276826
W 100	1110	1 - 9999			Power belt	2276826
W 100 R	1510	1 - 9999			Power belt	2378274
W 100 Ri	1610	1 - 9999			Power belt	2378274
W 120 R	1510	1 - 9999			Power belt	2378274
W 120 Ri	1610	1 - 9999			Power belt	2378274
W 1000 F	0710	1 - 9999			Power belt	92815
W 100 F	0810	1 - 9999			Power belt	194597
W 100 Fi	1310	1 - 9999			Power belt	194597
W 100 CF	1710	1 - 9999			Power belt	194597
W 100 CFi	1810	1 - 9999			Power belt	194597
W 1200 F	0710	1 - 9999			Power belt	92815
W 120 F	0810	1 - 9999			Power belt	194597
W 120 Fi	1310	1 - 9999			Power belt	194597
W 120 CF	1710	1 - 9999			Power belt	194597

POWER BELTS						
Series code	Serial code	Series range	Requirement	Milling width	Position	Part no.
W 120 CFi	1810	1 - 9999			Power belt	194597
W 1300 F	0710	1 - 9999			Power belt	92815
W 130 F	0810	1 - 9999			Power belt	194597
W 130 Fi	1310	1 - 9999			Power belt	194597
W 130 CF	1710	1 - 9999			Power belt	194597
W 130 CFi	1810	1 - 9999			Power belt	194597
W 1500	0820	1 - 253			Power belt	143377
		254 - 9999			Power belt	143377
W 150	0513	1 - 103			Power belt	66894
		104 - 9999			Power belt	66894
W 150i	0613	1 - 9999			Power belt	66894
W 150 CF	0713	1 - 9999			Power belt	2432611
W 150 CFi	0813	1 - 9999			Power belt	2432611
W 1900	0820	1 - 253			Power belt	143377
		254 - 9999			Power belt	143377
	0920	1 - 219			Power belt	143377
		220 - 9999			Power belt	143377
	1020	88 - 9999			Power belt	143377
W 195	1820	1 - 9999			Power belt	2117172
W 2000	0620, 1120	1 - 9999			Power belt	113850
W 200	1220	1 - 9999			Power belt	2117172
W 200i	1420	1 - 9999			Power belt	2117172
W 200 F	2020	1 - 9999			Power belt	2117172
W 200 Fi	2120	1 - 9999			Power belt	2117172
W 205	2520	1 - 9999			Power belt	2117172
W 207 Fi	2120	1 - 9999			Power belt	2117172

POWER BELTS

Series code	Serial code	Series range	Requirement	Milling width	Position	Part no.
W 2100	0921	1 - 9999			Power belt	138901
W 210	1320	6 - 329			Power belt	2099851
		330 - 9999			Power belt	2202448
W 210i	1520	1 - 9999			Power belt	2202448
W 210 Fi	2320	1 - 9999			Power belt	2637713
W 210 XP	2420	1 - 9999			Power belt	2579890
W 215	1920	1 - 9999			Power belt	2117172
W 2200	0821	1 - 9999		FB2200-3100	Power belt	120650
			2 pc.	FB3500-4400	Power belt	134734
W 220	0522	1 - 3			Power belt	2173436
		4 - 9999			Power belt	2205179
W 220i	0722	1 - 3			Power belt	2173436
		4 - 9999			Power belt	2205179
W 250	0422	1 - 9999		FB2200-3100	Power belt	2165101
				FB3500-4400	Power belt	2181962
				FB3500-4400	Power belt	2181976
W 250i	0622	1 - 9999		FB2200-3100	Power belt	2165101
				FB3500-4400	Power belt	2181962
				FB3500-4400	Power belt	2181976
WS 220	02AS	1 - 9999	2 pc.		Power belt	2106383
WS 250	02AS	1 - 9999	2 pc.		Power belt	2106383
WR 2000	03WR	1 - 9999			Power belt	173713
WR 200	06WR	1 - 9999			Power belt	2301089
WR 200i	09WR	1 - 9999			Power belt	2301089
WR 2400	05WR	1 - 9999			Power belt	189294
WR 240	07WR	1 - 9999			Power belt	2194459

Original WIRTGEN

MILLING DRUM DRIVE

POWER BELTS						
Series code	Serial code	Series range	Requirement	Milling width	Position	Part no.
WR 240i	10WR	1 - 9999			Power belt	2194459
WR 2500 S	04WR	1 - 9999			Power belt	33142
WR 250	08WR	1 - 9999			Power belt	2240153
WR 250i	11WR	1 - 9999			Power belt	2240153
W 240 CR	03CR	1 - 9999			Power belt	2565977
W 240 CRi	04CR	1 - 9999			Power belt	2565977
W 380 CR	03CR	1 - 9999			Power belt	2590525
					Power belt	2590523
W 380 CRi	04CR	1 - 9999			Power belt	2590525
					Power belt	2590523

BELT PULLEYS

Genuine WIRTGEN belt pulleys are made of high-strength, homogeneous cast materials and are dynamically balanced.

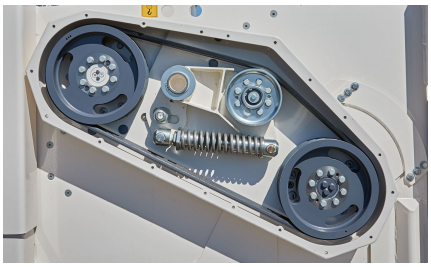

BELT PULLEYS							
Series code	Serial code	Series range	Diameter	Package in-cludes	Position(s)	Milling width	Part no.
W 35 DC	0403	1 - 9999	165 mm		**Position** Drive motor/clutch		175664
			105 mm		**Position** Tensioner roller		175666
			200 mm		**Position** Milling gearbox		175665
W 35 Ri	0703	1 - 9999	105 mm		**Position** Tensioner roller		175666
			200 mm		**Position** Milling gearbox		175665
			165 mm		**Position** Drive motor/clutch		175664

BELT PULLEYS

Series code	Serial code	Series range	Diameter	Package includes	Position(s)	Milling width	Part no.
W 50	0805, 1005	1 - 9999	215 mm		**Position** Drive motor/clutch		170161
			155 mm		**Position** Tensioner roller		173410
			230 mm		**Position** Milling gearbox		170170
W 50 DC	0905	1 - 9999	215 mm		**Position** Drive motor/clutch		170161
			155 mm		**Position** Tensioner roller		173410
			230 mm		**Position** Milling gearbox		170170
W 50 DCi	1205	1 - 9999	215 mm		**Position** Drive motor/clutch		170161
			155 mm		**Position** Tensioner roller		173410
			230 mm		**Position** Milling gearbox		170170
W 50 R	1405	1 - 9999	135 mm		**Position** Tensioner roller		2264517
			230 mm		**Position** Milling gearbox		2286049
			215 mm		**Position** Drive motor/clutch		2286039
W 50 Ri	1505	1 - 9999	135 mm		**Position** Tensioner roller		2264517
			230 mm		**Position** Milling gearbox		2286049
			215 mm		**Position** Drive motor/clutch		2286039
W 60 R	1405	1 - 9999	135 mm		**Position** Tensioner roller		2264517
			230 mm		**Position** Milling gearbox		2286049
			215 mm		**Position** Drive motor/clutch		2286039
W 60 Ri	1505	1 - 9999	135 mm		**Position** Tensioner roller		2264517
			230 mm		**Position** Milling gearbox		2286049
			215 mm		**Position** Drive motor/clutch		2286039
W 60	0910	1 - 9999	190 mm		**Position** Tensioner roller		2046453
			280 mm		**Position** Milling gearbox		97147
			250 mm		**Position** Drive motor/clutch		97146
W 60i	1210	1 - 9999	190 mm		**Position** Tensioner roller		2046453
			280 mm		**Position** Milling gearbox		97147

MILLING DRUM DRIVE

BELT PULLEYS

Series code	Serial code	Series range	Diameter	Package in-cludes	Position(s)	Milling width	Part no.
W 60i	1210	1 - 9999	250 mm		**Position** Drive motor/clutch		97146
W 100	0910	1 - 9999	190 mm		**Position** Tensioner roller		2046453
			280 mm		**Position** Milling gearbox		97147
			250 mm		**Position** Drive motor/clutch		97146
W 100i	1210	1 - 9999	190 mm		**Position** Tensioner roller		2046453
			280 mm		**Position** Milling gearbox		97147
			250 mm		**Position** Drive motor/clutch		97146
W 100	1010	1 - 9999	190 mm		**Position** Tensioner roller		2046453
			280 mm		**Position** Milling gearbox		97147
			250 mm		**Position** Drive motor/clutch		97146
W 100 L	1010	1 - 9999	190 mm		**Position** Tensioner roller		2046453
			280 mm		**Position** Milling gearbox		97147
			250 mm		**Position** Drive motor/clutch		97146
W 100	1110	1 - 9999	190 mm		**Position** Tensioner roller		2046453
			280 mm		**Position** Milling gearbox		97147
			250 mm		**Position** Drive motor/clutch		97146
W 100 R	1510	1 - 9999	135 mm		**Position** Tensioner roller		2264517
			280 mm		**Position** Milling gearbox		2378503
			250 mm		**Position** Drive motor/clutch		2378501
W 100 Ri	1610	1 - 9999	135 mm		**Position** Tensioner roller		2264517
			280 mm		**Position** Milling gearbox		2378503
			250 mm		**Position** Drive motor/clutch		2378501
W 120 R	1510	1 - 9999	135 mm		**Position** Tensioner roller		2264517
			280 mm		**Position** Milling gearbox		2378503
			250 mm		**Position** Drive motor/clutch		2378501
W 120 Ri	1610	1 - 9999	135 mm		**Position** Tensioner roller		2264517

BELT PULLEYS

Series code	Serial code	Series range	Diameter	Package includes	Position(s)	Milling width	Part no.
W 120 Ri	1610	1 - 9999	280 mm		**Position** Milling gearbox		2378503
			250 mm		**Position** Drive motor/clutch		2378501
W 1000 F	0710	1 - 9999	250 mm		**Position** Drive motor/clutch		52203
			265 mm	incl. bearings	**Position** Tensioner roller		97207
			325 mm		**Position** Milling gearbox		90042
W 100 F	0810	1 - 9999	265 mm		**Position** Drive motor/clutch; Tensioner roller		191432
			315 mm		**Position** Milling gearbox		170796
W 100 Fi	1310	1 - 9999	265 mm		**Position** Drive motor/clutch; Tensioner roller		191432
			315 mm		**Position** Milling gearbox		170796
W 100 CF	1710	1 - 9999	265 mm		**Position** Drive motor/clutch; Tensioner roller		191432
			315 mm		**Position** Milling gearbox		170796
W 100 CFi	1810	1 - 9999	265 mm		**Position** Drive motor/clutch; Tensioner roller		191432
			315 mm		**Position** Milling gearbox		170796
W 1200 F	0710	1 - 9999	250 mm		**Position** Drive motor/clutch		52203
			265 mm	incl. bearings	**Position** Tensioner roller		97207
			325 mm		**Position** Milling gearbox		90042
W 120 F	0810	1 - 9999	265 mm		**Position** Drive motor/clutch; Tensioner roller		191432
			315 mm		**Position** Milling gearbox		170796
W 120 Fi	1310	1 - 9999	265 mm		**Position** Drive motor/clutch; Tensioner roller		191432
			315 mm		**Position** Milling gearbox		170796

BELT PULLEYS

Series code	Serial code	Series range	Diameter	Package includes	Position(s)	Milling width	Part no.
W 120 CF	1710	1 - 9999	265 mm		**Position** Drive motor/clutch; Tensioner roller		191432
			315 mm		**Position** Milling gearbox		170796
W 120 CFi	1810	1 - 9999	315 mm		**Position** Milling gearbox		170796
			265 mm		**Position** Drive motor/clutch; Tensioner roller		191432
W 1300 F	0710	1 - 9999	250 mm		**Position** Drive motor/clutch		52203
			265 mm	incl. bearings	**Position** Tensioner roller		97207
			325 mm		**Position** Milling gearbox		90042
W 130 F	0810	1 - 9999	265 mm		**Position** Drive motor/clutch; Tensioner roller		191432
			315 mm		**Position** Milling gearbox		170796
W 130 Fi	1310	1 - 9999	265 mm		**Position** Drive motor/clutch; Tensioner roller		191432
			315 mm		**Position** Milling gearbox		170796
W 130 CF	1710	1 - 9999	265 mm		**Position** Drive motor/clutch; Tensioner roller		191432
			315 mm		**Position** Milling gearbox		170796
W 130 CFi	1810	1 - 9999	265 mm		**Position** Drive motor/clutch; Tensioner roller		191432
			315 mm		**Position** Milling gearbox		170796
W 1500	0820	1 - 253	330 mm		**Position** Drive motor/clutch		142158
			280 mm		**Position** Milling gearbox		67150
			250 mm		**Position** Tensioner roller		67151
		254 - 9999	330 mm		**Position** Drive motor/clutch		142158
			280 mm		**Position** Milling gearbox		148639

BELT PULLEYS

Series code	Serial code	Series range	Diameter	Package includes	Position(s)	Milling width	Part no.
W 1500	0820	254 - 9999	250 mm		**Position** Tensioner roller		186903
W 150	0513	1 - 103	315 mm		**Position** Drive motor/clutch		170796
			250 mm		**Position** Tensioner roller		186903
			280 mm		**Position** Milling gearbox		67150
		104 - 9999	280 mm		**Position** Milling gearbox		148639
			315 mm		**Position** Drive motor/clutch		170796
			250 mm		**Position** Tensioner roller		186903
W 150i	0613	1 - 9999	280 mm		**Position** Milling gearbox		148639
			250 mm		**Position** Tensioner roller		186903
			315 mm		**Position** Drive motor/clutch		170796
W 150 CF	0713	1 - 9999	265 mm		**Position** Drive motor/clutch		2443001
			250 mm		**Position** Milling gearbox; Tensioner roller		2442788
W 150 CFi	0813	1 - 9999	265 mm		**Position** Drive motor/clutch		2443001
			250 mm		**Position** Milling gearbox; Tensioner roller		2442788
W 1900	0820	1 - 253	330 mm		**Position** Drive motor/clutch		142158
			280 mm		**Position** Milling gearbox		67150
			250 mm		**Position** Tensioner roller		67151
		254 - 9999	330 mm		**Position** Drive motor/clutch		142158
			280 mm		**Position** Milling gearbox		148639
			250 mm		**Position** Tensioner roller		186903
	0920	1 - 219	330 mm		**Position** Drive motor/clutch		142158
			280 mm		**Position** Milling gearbox		67150
			250 mm		**Position** Tensioner roller		67151
		220 - 9999	330 mm		**Position** Drive motor/clutch		142158

MILLING DRUM DRIVE

BELT PULLEYS							
Series code	Serial code	Series range	Diameter	Package in-cludes	Position(s)	Milling width	Part no.
W 1900	0920	220 - 9999	280 mm		**Position** Milling gearbox		148639
			250 mm		**Position** Tensioner roller		186903
	1020	88 - 9999	330 mm		**Position** Drive motor/clutch		142158
			250 mm		**Position** Tensioner roller		186903
			280 mm		**Position** Milling gearbox		148639
W 195	1820	1 - 9999	280 mm		**Position** Milling gearbox		2102336
			355 mm		**Position** Drive motor/clutch		2096843
			365 mm		**Position** Tensioner roller		2079000
W 2000	0620, 1120	1 - 9999	280 mm		**Position** Milling gearbox		114274
			315 mm		**Position** Drive motor/clutch		72438
			250 mm		**Position** Tensioner roller		114275
W 200	1220	1 - 9999	365 mm		**Position** Tensioner roller		2079000
			280 mm		**Position** Milling gearbox		2102336
			355 mm		**Position** Drive motor/clutch		2096843
W 200i	1420	1 - 9999	365 mm		**Position** Tensioner roller		2079000
			280 mm		**Position** Milling gearbox		2102336
			355 mm		**Position** Drive motor/clutch		2096843
W 200 F	2020	1 - 9999	280 mm		**Position** Tensioner roller		2600278
			355 mm		**Position** Drive motor/clutch		2654035
			280 mm		**Position** Milling gearbox		2610880
W 200 Fi	2120	1 - 9999	280 mm		**Position** Tensioner roller		2600278
			355 mm		**Position** Drive motor/clutch		2654035
			280 mm		**Position** Milling gearbox		2610880
W 205	2520	1 - 9999	365 mm		**Position** Tensioner roller		2079000
			280 mm		**Position** Milling gearbox		2102336
			355 mm		**Position** Drive motor/clutch		2096843

BELT PULLEYS

Series code	Serial code	Series range	Diameter	Package includes	Position(s)	Milling width	Part no.
W 207 Fi	2120	1 - 9999	280 mm		**Position** Tensioner roller		2600278
			355 mm		**Position** Drive motor/clutch		2654035
			280 mm		**Position** Milling gearbox		2610880
W 2100	0921	1 - 9999	355 mm		**Position** Milling gearbox		72437
			400 mm		**Position** Drive motor/clutch		80028
			315 mm		**Position** Tensioner roller		72438
W 210	1320	6 - 329	355 mm		**Position | Requirement** Drive motor/clutch | 2 pc.		2096843
			365 mm		**Position** Tensioner roller		2079000
			280 mm		**Position** Milling gearbox		2102336
		330 - 9999	355 mm		**Position | Requirement** Drive motor/clutch | 2 pc.		2096843
			365 mm		**Position** Tensioner roller		2079000
			280 mm		**Position** Milling gearbox		2102336
W 210i	1520	1 - 9999	365 mm		**Position** Tensioner roller		2079000
			280 mm		**Position** Milling gearbox		2102336
			355 mm		**Position | Requirement** Drive motor/clutch | 2 pc.		2096843
W 210 Fi	2320	1 - 9999	280 mm		**Position** Tensioner roller		2600278
			355 mm		**Position** Drive motor/clutch		2654035
			280 mm		**Position** Milling gearbox		2610880
W 210 XP	2420	1 - 9999	365 mm		**Position** Tensioner roller		2079000
			280 mm		**Position** Milling gearbox		2102336
			355 mm		**Position** Drive motor/clutch		2096843
W 215	1920	1 - 9999	365 mm		**Position** Tensioner roller		2079000
			280 mm		**Position** Milling gearbox		2102336

Original WIRTGEN

MILLING DRUM DRIVE

BELT PULLEYS							
Series code	Serial code	Series range	Diameter	Package in-cludes	Position(s)	Milling width	Part no.
W 215	1920	1 - 9999	355 mm		**Position** Drive motor/clutch		2096843
W 2200	0821	1 - 9999	400 mm		**Position** Drive motor/clutch	FB2200-3100	118543
			355 mm		**Position | Requirement** Milling gearbox; Tensioner roller | 2 pc.	FB2200-3100; FB3500-4400	118547
			400 mm		**Position** Drive motor/clutch	FB3500-4400	118546
			315 mm		**Position** Tensioner roller	FB2200-3100	118545
W 220	0522	1 - 3	365 mm		**Position** Tensioner roller		2099112
			420 mm		**Position** Drive motor/clutch		2272265
			355 mm		**Position** Milling gearbox		2101923
		4 - 9999	365 mm		**Position** Tensioner roller		2099112
			420 mm		**Position** Drive motor/clutch		2272265
			355 mm		**Position** Milling gearbox		2101923
W 220i	0722	1 - 3	365 mm		**Position** Tensioner roller		2099112
			355 mm		**Position** Milling gearbox		2101923
			420 mm		**Position** Drive motor/clutch		2272265
		4 - 9999	420 mm		**Position** Drive motor/clutch		2272265
			365 mm		**Position** Tensioner roller		2099112
			355 mm		**Position** Milling gearbox		2101923
W 250	0422	1 - 9999	355 mm		**Position** Milling gearbox	FB2200-3100; FB3500-4400	2101923
			365 mm		**Position** Tensioner roller	FB2200-3100; FB3500-4400	2099112
			420 mm		**Position | Requirement** Drive motor/clutch | 2 pc.	FB2200-3100; FB3500-4400	2272265
W 250i	0622	1 - 9999	355 mm		**Position** Milling gearbox	FB2200-3100; FB3500-4400	2101923
			420 mm		**Position | Requirement** Drive motor/clutch | 2 pc.	FB2200-3100; FB3500-4400	2272265
			365 mm		**Position** Tensioner roller	FB2200-3100; FB3500-4400	2099112

BELT PULLEYS

Series code	Serial code	Series range	Diameter	Package includes	Position(s)	Milling width	Part no.
WS 220	02AS	1 - 9999	330 mm		**Position** Drive motor/clutch; Milling gearbox		182730
			190 mm		**Position** Tensioner roller		182732
WS 250	02AS	1 - 9999	190 mm		**Position** Tensioner roller		182732
			330 mm		**Position** Drive motor/clutch; Milling gearbox		182730
WR 2000	03WR	1 - 9999	400 mm		**Position** Drive motor/clutch		170798
			355 mm		**Position** Milling gearbox		170797
			315 mm		**Position** Tensioner roller		170796
WR 200	06WR	1 - 9999	315 mm		**Position** Tensioner roller		170796
			400 mm		**Position** Drive motor/clutch		170798
			355 mm		**Position** Milling gearbox		170797
WR 200i	09WR	1 - 9999	400 mm		**Position** Drive motor/clutch		170798
			355 mm		**Position** Milling gearbox		170797
			315 mm		**Position** Tensioner roller		170796
WR 2400	05WR	1 - 9999	315 mm		**Position** Tensioner roller		72438
			355 mm		**Position** Milling gearbox		72437
			400 mm		**Position** Drive motor/clutch		80028
WR 240	07WR	1 - 9999	365 mm		**Position** Tensioner roller		2248223
			355 mm		**Position** Milling gearbox		72437
			315 mm		**Position** Return roller		72438
			400 mm		**Position** Drive motor/clutch		80028
WR 240i	10WR	1 - 9999	315 mm		**Position** Return roller		72438
			355 mm		**Position** Milling gearbox		72437
			365 mm		**Position** Tensioner roller		2248223
			400 mm		**Position** Drive motor/clutch		80028

Original WIRTGEN

MILLING DRUM DRIVE

BELT PULLEYS							
Series code	Serial code	Series range	Diameter	Package in-cludes	Position(s)	Milling width	Part no.
WR 2500 S	04WR	1 - 9999	400 mm		**Position** Milling gearbox		80028
			355 mm		**Position** Drive motor/clutch; Tensioner roller		72437
WR 250	08WR	1 - 9999	365 mm		**Position** Tensioner roller		2248223
			400 mm		**Position** Milling gearbox		2219400
			355 mm		**Position** Drive motor/clutch; Return roller		2219396
WR 250i	11WR	1 - 9999	365 mm		**Position** Tensioner roller		2248223
			355 mm		**Position** Drive motor/clutch; Return roller		2219396
			400 mm		**Position** Milling gearbox		2219400
W 240 CR	03CR	1 - 9999	355 mm		**Position** Milling gearbox; Return roller		2101923
			365 mm		**Position** Tensioner roller		2099112
			400 mm		**Position** Drive motor/clutch		118543
W 240 CRi	04CR	1 - 9999	355 mm		**Position** Milling gearbox; Return roller		2101923
			365 mm		**Position** Tensioner roller		2099112
			400 mm		**Position** Drive motor/clutch		118543
W 380 CR	03CR	1 - 9999	355 mm		**Position | Requirement** Milling gearbox; Tensioner roller | 2 pc.		2101923
			400 mm		**Position** Drive motor/clutch		118543
W 380 CRi	04CR	1 - 9999	400 mm		**Position** Drive motor/clutch		118543
			355 mm		**Position | Requirement** Milling gearbox; Tensioner roller | 2 pc.		2101923

TELEMATICS

WITOS, the telematics system from the WIRTGEN GROUP, offers an optimised package of solutions to increase your productivity on the job site. The intelligent WITOS FleetView telematics system from the WIRTGEN GROUP supports fleet and service management for machines from WIRTGEN, VÖGELE, HAMM and KLEEMANN. Thanks to the system-supported processing, transmission, visualisation and evaluation of machine and position data, fleet and service management becomes even more efficient during day-to-day operations. With WITOS FleetView, you can keep track of your fleet of machines at all times.

> Read more online

WITOS FLEETVIEW

WITOS FleetView fleet management gives you a permanent overview of the condition of your machines. Machines that are not factory-equipped for WITOS FleetView require an additional cable set, which you can order by providing us the machine's serial number.

WITOS FleetView is not available in all countries and for all model series – please contact your local sales and service company if you have any questions.

WITOS FLEETVIEW

Series code	Serial code	Series range	Part	Package includes	Part no.
W 35 Ri	0703	1 - 5	Cable set		2555113
		1 - 9999	WITOS FleetView retrofit kit	without cable set	2483436

WITOS FLEETVIEW					
Series code	Serial code	Series range	Part	Package includes	Part no.
W 50 R	1405	1 - 23	Cable set		2555113
		1 - 9999	WITOS FleetView retrofit kit	without cable set	2483436
W 50 Ri	1505	1 - 24	Cable set		2555113
		1 - 9999	WITOS FleetView retrofit kit	without cable set	2483436
W 60 R	1405	1 - 23	Cable set		2555113
		1 - 9999	WITOS FleetView retrofit kit	without cable set	2483436
W 60 Ri	1505	1 - 24	Cable set		2555113
		1 - 9999	WITOS FleetView retrofit kit	without cable set	2483436
W 100 R	1510	1 - 25	Cable set		2555113
		1 - 9999	WITOS FleetView retrofit kit	without cable set	2483436
W 100 Ri	1610	1 - 9999	WITOS FleetView retrofit kit	without cable set	2483436
W 120 R	1510	1 - 25	Cable set		2555113
		1 - 9999	WITOS FleetView retrofit kit	without cable set	2483436
W 120 Ri	1610	1 - 9999	WITOS FleetView retrofit kit	without cable set	2483436
W 100 F	0810	680 - 9999	Cable set		2535386
			WITOS FleetView retrofit kit	without cable set	2483436
W 100 Fi	1310	1 - 263	Cable set		2535388
		1 - 9999	WITOS FleetView retrofit kit	without cable set	2483436
W 100 CF	1710	1 - 134	Cable set		2555113
		1 - 9999	WITOS FleetView retrofit kit	without cable set	2483436
W 100 CFi	1810	1 - 9999	WITOS FleetView retrofit kit	without cable set	2483436
W 120 F	0810	680 - 9999	Cable set		2535386
			WITOS FleetView retrofit kit	without cable set	2483436
W 120 Fi	1310	1 - 263	Cable set		2535388
		1 - 9999	WITOS FleetView retrofit kit	without cable set	2483436
W 120 CF	1710	1 - 134	Cable set		2555113

WITOS FLEETVIEW

Series code	Serial code	Series range	Part	Package includes	Part no.
W 120 CF	1710	1 - 9999	WITOS FleetView retrofit kit	without cable set	2483436
W 120 CFi	1810	1 - 9999	WITOS FleetView retrofit kit	without cable set	2483436
W 130 F	0810	680 - 9999	Cable set		2535386
			WITOS FleetView retrofit kit	without cable set	2483436
W 130 Fi	1310	1 - 263	Cable set		2535388
		1 - 9999	WITOS FleetView retrofit kit	without cable set	2483436
W 130 CF	1710	1 - 134	Cable set		2555113
		1 - 9999	WITOS FleetView retrofit kit	without cable set	2483436
W 130 CFi	1810	1 - 9999	WITOS FleetView retrofit kit	without cable set	2483436
W 150	0513	70 - 309	Cable set		2650797
			WITOS FleetView retrofit kit	without cable set	2483436
W 150i	0613	1 - 60	Cable set		2348164
		1 - 9999	WITOS FleetView retrofit kit	without cable set	2483436
W 150 CF	0713	1 - 38	Cable set		2555113
		1 - 9999	WITOS FleetView retrofit kit	without cable set	2483436
W 150 CFi	0813	1 - 9999	WITOS FleetView retrofit kit	without cable set	2483436
W 2000	0620	1 - 9999	Cable set		2650795
			WITOS FleetView retrofit kit	without cable set	2483436
W 200	1220	1 - 838	Cable set		2470503
		1 - 9999	WITOS FleetView retrofit kit	without cable set	2483436
W 200i	1420	1 - 84	Cable set		2470503
		1 - 9999	WITOS FleetView retrofit kit	without cable set	2483436
W 200 Hi	1720	1 - 22	Cable set		2470503
		1 - 9999	WITOS FleetView retrofit kit	without cable set	2483436
W 2100	0921	260 - 9999	Cable set		2725442
			WITOS FleetView retrofit kit	without cable set	2483436

WITOS FLEETVIEW					
Series code	Serial code	Series range	Part	Package includes	Part no.
W 210	1320	6 - 432	Cable set		2470503
		6 - 9999	WITOS FleetView retrofit kit	without cable set	2483436
W 210i	1520	1 - 112	Cable set		2470503
		1 - 9999	WITOS FleetView retrofit kit	without cable set	2483436
W 210 XP	2420	1 - 9999	WITOS FleetView retrofit kit	without cable set	2483436
W 2200	0821	200 - 9999	Cable set		2512856
			WITOS FleetView retrofit kit	without cable set	2483436
W 220	0522	1 - 56	Cable set		2470503
		1 - 9999	WITOS FleetView retrofit kit	without cable set	2483436
W 220i	0722	1 - 9999	WITOS FleetView retrofit kit	without cable set	2483436
W 250	0422	3 - 9999	Cable set		2470503
			WITOS FleetView retrofit kit	without cable set	2483436
W 250i	0622	1 - 16	Cable set		2470503
		1 - 9999	WITOS FleetView retrofit kit	without cable set	2483436
WR 2000	03WR	1 - 9999	Cable set		2656550
			WITOS FleetView retrofit kit	without cable set	2483436
WR 200	06WR	1 - 66	Cable set		2381420
		1 - 9999	WITOS FleetView retrofit kit	without cable set	2483436
WR 200i	09WR	1 - 9999	WITOS FleetView retrofit kit	without cable set	2483436
WR 2400	05WR	1 - 9999	Cable set		2656550
			WITOS FleetView retrofit kit	without cable set	2483436
WR 240	07WR	1 - 274	Cable set		2381420
		1 - 9999	WITOS FleetView retrofit kit	without cable set	2483436
WR 240i	10WR	1 - 55	Cable set		2381420
		1 - 9999	WITOS FleetView retrofit kit	without cable set	2483436
WR 2500 S	04WR	350 - 9999	Cable set		2656551

WITOS FLEETVIEW

Series code	Serial code	Series range	Part	Package includes	Part no.
WR 2500 S	04WR	350 - 9999	WITOS FleetView retrofit kit	without cable set	2483436
WR 250	08WR	1 - 38	Cable set		2381420
		1 - 9999	WITOS FleetView retrofit kit	without cable set	2483436
WR 250i	11WR	1 - 9999	WITOS FleetView retrofit kit	without cable set	2483436
KMA 220i	06MS	1 - 9999	WITOS FleetView retrofit kit	without cable set	2483436
KMA 220	05MS	104 - 9999	WITOS FleetView retrofit kit	without cable set	2483436
SP 15	12SP	220 - 9999	WITOS FleetView retrofit kit	without cable set	2483436
SP 15i	14SP	25 - 9999	WITOS FleetView retrofit kit	without cable set	2483436
SP 25	13SP	146 - 9999	WITOS FleetView retrofit kit	without cable set	2483436
SP 25i	15SP	25 - 9999	WITOS FleetView retrofit kit	without cable set	2483436
SP 61	22SP	1 - 89	Cable set		2430597
		1 - 9999	WITOS FleetView retrofit kit	without cable set	2483436
SP 61i	23SP	1 - 9999	WITOS FleetView retrofit kit	without cable set	2483436
SP 62	22SP	1 - 89	Cable set		2430597
		1 - 9999	WITOS FleetView retrofit kit	without cable set	2483436
SP 62i	23SP	1 - 9999	WITOS FleetView retrofit kit	without cable set	2483436
SP 64	22SP	1 - 89	Cable set		2430597
		1 - 9999	WITOS FleetView retrofit kit	without cable set	2483436
SP 64i	23SP	1 - 9999	WITOS FleetView retrofit kit	without cable set	2483436
SP 92	20SP	1 - 47	Cable set		2430597
		1 - 9999	WITOS FleetView retrofit kit	without cable set	2483436
SP 92i	21SP	1 - 9999	WITOS FleetView retrofit kit	without cable set	2483436
SP 94	20SP	1 - 47	Cable set		2430597
		1 - 9999	WITOS FleetView retrofit kit	without cable set	2483436
SP 94i	21SP	1 - 9999	WITOS FleetView retrofit kit	without cable set	2483436

Original WIRTGEN

EMERGENCY KITS

Machine downtime on the construction site is extremely costly. To reduce the amount of time spent dealing with unforeseen repairs, WIRTGEN has put together both emergency kits and service cases for electrical components.

The contents of the kits and cases make it possible to quickly solve problems with on-board tools directly on the construction site, thus saving money. Because the parts are specifically selected for the respective machine, you always have the most important spare parts available on site. The kit is supplied in a practical case and can thus be stowed in the machine's storage compartment, for example.

> Read more online

EMERGENCY KITS

WIRTGEN emergency kits offer practical assistance to help you rapidly repair electrical components.

EMERGENCY KITS			
Series code	Serial code	Series range	Part no.
W 35 Ri	0703	1 - 9999	2528876
W 50 R	1405	1 - 9999	2528876
W 50 Ri	1505	1 - 9999	2528876

EMERGENCY KITS			
Series code	Serial code	Series range	Part no.
W 50 H	1305	1 - 9999	2091528
W 55 H	1305	1 - 9999	2091528
W 60 R	1405	1 - 9999	2528876
W 60 Ri	1505	1 - 9999	2528876
W 60	0910	1 - 9999	2091528
W 60i	1210	1 - 9999	2091528
W 100	0910	1 - 9999	2091528
W 100i	1210	1 - 9999	2091528
W 100	1010	1 - 9999	2091528
W 100 L	1010	1 - 9999	2091528
W 100 H	1910	1 - 9999	2091528
W 100	1110	1 - 9999	2091528
W 100 R	1510	1 - 9999	2528876
W 100 Ri	1610	1 - 9999	2528876
W 100 H	1410	1 - 9999	2091528
W 120 R	1510	1 - 9999	2528876
W 120 Ri	1610	1 - 9999	2528876
W 130 H	1410, 1910	1 - 9999	2091528
W 1000 F	0710	1 - 329	194195
		330 - 9999	200017
W 100 F	0810	1 - 9999	2061025
W 100 Fi	1310	1 - 9999	2061025
W 100 CF	1710	1 - 9999	2528876
W 100 CFi	1810	1 - 9999	2528876
W 1200 F	0710	1 - 329	194195
		330 - 9999	200017
W 120 F	0810	1 - 9999	2061025

EMERGENCY KITS

EMERGENCY KITS			
Series code	Serial code	Series range	Part no.
W 120 Fi	1310	1 - 9999	2061025
W 120 CF	1710	1 - 9999	2528876
W 120 CFi	1810	1 - 9999	2528876
W 1300 F	0710	1 - 329	194195
		330 - 9999	200017
W 130 F	0810	1 - 9999	2061025
W 130 Fi	1310	1 - 9999	2061025
W 130 CF	1710	1 - 9999	2528876
W 130 CFi	1810	1 - 9999	2528876
W 1500	0820	1 - 9999	194189
W 150	0513	1 - 9999	2061025
W 150i	0613	1 - 9999	2061025
W 150 CF	0713	1 - 9999	2528876
W 150 CFi	0813	1 - 9999	2528876
W 1900	0820, 1020	1 - 9999	194189
W 195	1820	1 - 9999	2143541
W 2000	0620, 1120	1 - 9999	194188
W 200	1220	1 - 9999	2143541
W 200i	1420	1 - 9999	2143541
W 205	2520	1 - 9999	2143541
W 2100	0921	1 - 9999	194188
W 210	1320	1 - 9999	2143541
W 210i	1520	1 - 9999	2143541
W 210 XP	2420	1 - 9999	2143541
W 215	1920	1 - 9999	2143541
W 2200	0821	1 - 9999	194188
W 220	0522	1 - 9999	2143541

EMERGENCY KITS			
Series code	Serial code	Series range	Part no.
W 220i	0722	1 - 9999	2143541
W 250	0422	1 - 9999	2143541
WR 2000	03WR	1 - 124	200019
		125 - 9999	2061021
WR 200	06WR	1 - 9999	2284497
WR 200i	09WR	1 - 9999	2284497
WR 2400	05WR	1 - 9999	2061021
WR 240	07WR	1 - 9999	2284497
WR 240i	10WR	1 - 9999	2284497
WR 2500 S	04WR	1 - 9999	200020
WR 250	08WR	1 - 9999	2284497
WR 250i	11WR	1 - 9999	2284497

SERVICE CASE

WIRTGEN service cases contain everything needed to rectify minor electrical faults as well as to carry out regular maintenance with the appropriate small parts.

SERVICE CASE				
Series code	Serial code	Series range	Version	Part no.
W 35 DC	0403	1 - 9999	Electrical service case for workshop staff	2174832
			Electrical service case for machine operators	148616
W 35 Ri	0703	1 - 9999	Electrical service case for workshop staff	2529169
W 500	0605	1 - 9999	Electrical service case for workshop staff	2174835
			Electrical service case for machine operators	147320

Original WIRTGEN

EMERGENCY KITS

SERVICE CASE				
Series code	Serial code	Series range	Version	Part no.
W 50	1005	1 - 9999	Electrical service case for workshop staff	2174832
			Electrical service case for machine operators	148616
W 50 DC	0905	1 - 9999	Electrical service case for workshop staff	2174832
			Electrical service case for machine operators	148616
W 50 R	1405	1 - 9999	Electrical service case for workshop staff	2529169
W 50 Ri	1505	1 - 9999	Electrical service case for workshop staff	2529169
W 50 H	1305	1 - 9999	Electrical service case for workshop staff	2174832
			Electrical service case for machine operators	148616
W 55 H	1305	1 - 9999	Electrical service case for workshop staff	2174832
			Electrical service case for machine operators	148616
W 60 R	1405	1 - 9999	Electrical service case for workshop staff	2529169
W 60 Ri	1505	1 - 9999	Electrical service case for workshop staff	2529169
W 60	0910	1 - 9999	Electrical service case for workshop staff	2174832
			Electrical service case for machine operators	148616
W 60i	1210	1 - 9999	Electrical service case for workshop staff	2174832
			Electrical service case for machine operators	148616
W 100	0910	1 - 9999	Electrical service case for workshop staff	2174832
			Electrical service case for machine operators	148616
W 100i	1210	1 - 9999	Electrical service case for workshop staff	2174832
			Electrical service case for machine operators	148616
W 100	1010	1 - 9999	Electrical service case for workshop staff	2174832
			Electrical service case for machine operators	148616
W 100 L	1010	1 - 9999	Electrical service case for workshop staff	2174832
			Electrical service case for machine operators	148616
W 100 H	1910	1 - 9999	Electrical service case for workshop staff	2174832
			Electrical service case for machine operators	148616

SERVICE CASE

Series code	Serial code	Series range	Version	Part no.
W 100	1110	1 - 9999	Electrical service case for workshop staff	2174832
			Electrical service case for machine operators	148616
W 100 R	1510	1 - 9999	Electrical service case for workshop staff	2529169
W 100 Ri	1610	1 - 9999	Electrical service case for workshop staff	2529169
W 100 H	1410	1 - 9999	Electrical service case for workshop staff	2174832
			Electrical service case for machine operators	148616
W 120 R	1510	1 - 9999	Electrical service case for workshop staff	2529169
W 120 Ri	1610	1 - 9999	Electrical service case for workshop staff	2529169
W 130 H	1410, 1910	1 - 9999	Electrical service case for workshop staff	2174832
			Electrical service case for machine operators	148616
W 1000 F	0710	1 - 164	Electrical service case for machine operators	147320
			Electrical service case for workshop staff	2174835
		165 - 9999	Electrical service case for machine operators	148616
			Electrical service case for workshop staff	2174832
W 100 F	0810	1 - 9999	Electrical service case for workshop staff	2174832
			Electrical service case for machine operators	148616
W 100 Fi	1310	1 - 9999	Electrical service case for workshop staff	2174832
			Electrical service case for machine operators	148616
W 100 CF	1710	1 - 9999	Electrical service case for workshop staff	2529169
W 100 CFi	1810	1 - 9999	Electrical service case for workshop staff	2529169
W 1200 F	0710	1 - 164	Electrical service case for machine operators	147320
			Electrical service case for workshop staff	2174835
		165 - 9999	Electrical service case for machine operators	148616
			Electrical service case for workshop staff	2174832
W 120 F	0810	1 - 9999	Electrical service case for workshop staff	2174832
			Electrical service case for machine operators	148616

Original WIRTGEN

EMERGENCY KITS

SERVICE CASE				
Series code	Serial code	Series range	Version	Part no.
W 120 Fi	1310	1 - 9999	Electrical service case for workshop staff	2174832
			Electrical service case for machine operators	148616
W 120 CF	1710	1 - 9999	Electrical service case for workshop staff	2529169
W 120 CFi	1810	1 - 9999	Electrical service case for workshop staff	2529169
W 1300 F	0710	1 - 164	Electrical service case for machine operators	147320
			Electrical service case for workshop staff	2174835
		165 - 9999	Electrical service case for machine operators	148616
			Electrical service case for workshop staff	2174832
W 130 F	0810	1 - 9999	Electrical service case for workshop staff	2174832
			Electrical service case for machine operators	148616
W 130 Fi	1310	1 - 9999	Electrical service case for workshop staff	2174832
			Electrical service case for machine operators	148616
W 130 CF	1710	1 - 9999	Electrical service case for workshop staff	2529169
W 130 CFi	1810	1 - 9999	Electrical service case for workshop staff	2529169
W 1500	0820	1 - 9999	Electrical service case for workshop staff	2174832
			Electrical service case for machine operators	148616
W 150	0513	1 - 9999	Electrical service case for workshop staff	2174832
			Electrical service case for machine operators	148616
W 150i	0613	1 - 9999	Electrical service case for workshop staff	2174832
			Electrical service case for machine operators	148616
W 150 CF	0713	1 - 9999	Electrical service case for workshop staff	2529169
W 150 CFi	0813	1 - 9999	Electrical service case for workshop staff	2529169
W 1900	0820, 1020	1 - 9999	Electrical service case for workshop staff	2174832
			Electrical service case for machine operators	148616
W 195	1820	1 - 9999	Electrical service case for machine operators	2143521
W 2000	0620	1 - 215	Electrical service case for machine operators	147320

SERVICE CASE

Series code	Serial code	Series range	Version	Part no.
W 2000	0620	1 - 215	Electrical service case for workshop staff	2174835
		216 - 9999	Electrical service case for machine operators	148616
			Electrical service case for workshop staff	2174832
	1120	1 - 9999	Electrical service case for workshop staff	2174832
			Electrical service case for machine operators	148616
W 200	1220	1 - 9999	Electrical service case for machine operators	2143521
W 200i	1420	1 - 9999	Electrical service case for machine operators	2143521
W 205	2520	1 - 9999	Electrical service case for machine operators	2143521
W 2100	0921	1 - 11	Electrical service case for machine operators	147320
			Electrical service case for workshop staff	2174835
		12 - 9999	Electrical service case for machine operators	148616
			Electrical service case for workshop staff	2174832
W 210	1320	1 - 9999	Electrical service case for machine operators	2143521
W 210i	1520	1 - 9999	Electrical service case for machine operators	2143521
W 210 XP	2420	1 - 9999	Electrical service case for machine operators	2143521
W 215	1920	1 - 9999	Electrical service case for machine operators	2143521
W 2200	0821	1 - 59	Electrical service case for machine operators	147320
			Electrical service case for workshop staff	2174835
		60 - 9999	Electrical service case for machine operators	148616
			Electrical service case for workshop staff	2174832
W 220	0522	1 - 9999	Electrical service case for machine operators	2143521
W 220i	0722	1 - 9999	Electrical service case for machine operators	2143521
W 250	0422	1 - 9999	Electrical service case for machine operators	2143521
WR 2000	03WR	1 - 9999	Electrical service case for machine operators	148616
			Electrical service case for workshop staff	2174832
WR 2400	05WR	1 - 9999	Electrical service case for machine operators	148616

EMERGENCY KITS

SERVICE CASE				
Series code	Serial code	Series range	Version	Part no.
WR 2400	05WR	1 - 9999	Electrical service case for workshop staff	2174832
WR 2500 S	04WR	1 - 9999	Electrical service case for machine operators	148616
			Electrical service case for workshop staff	2174832

TOOLS

Nothing is more important than the reliability of your machine. With the right tools from WIRTGEN, you can help yourself quickly and easily in the event of minor maintenance tasks or when changing picks – be it with the valuable tools for road milling machines, for changing round-shank picks or for maintenance and assembly. You will also find everything you need for minor hydraulic maintenance tasks in the WIRTGEN service cases.

> Read more online

SERVICE CASE

WIRTGEN service cases contain everything needed to carry out minor maintenance work on your machines' hydraulic systems, electrical systems and conveyor belts.

SERVICE CASE	
Version	Part no.
Hydraulic testing kit	12782
Complete crimping kit	2191384
Electrical testing kit	89900
Vacuum kit	95304

TOOLS FOR ROAD MILLING MACHINES

WIRTGEN offers two different optional tool kits for maintenance and repair work on its road milling machines. The wear gauges for belt pulleys allow you to easily estimate tooth flank wear.

TOOLS FOR ROAD MILLING MACHINES			
Part	Version	Application	Part no.
Wear gauge	for belt pulleys	5V V-belt profile	2065403
	for belt pulleys	WB15 V-belt profile	2163595
Tool kit	large		72612
	small		72613

TOOLS FOR CHANGING ROUND-SHANK PICKS

WIRTGEN offers suitable tools for removing used round-shank picks and inserting the new milling tools.

TOOLS FOR CHANGING ROUND-SHANK PICKS							
Part	Version	Description	Diameter	Thread	Package includes	Hose length	Part no.
Spout	Pneumatic pick driver and ejector		12 mm	R1/4"			11283
Pneumatic hammer	Pneumatic pick driver and ejector				incl. holding sleeve for driving tool and spout		11512
Ejector	for round-shank picks						193685
Pick ejector	Hydraulic ejector					4.3 m	2250069
	Hydraulic ejector					2.5 m	2580977

TOOLS FOR CHANGING ROUND-SHANK PICKS

Part	Version	Description	Diameter	Thread	Package in-cludes	Hose length	Part no.
Extractor	for round-shank picks						28812
Ejector	for round-shank picks						45275
Holding sleeve	Pneumatic pick driver and ejector	for driving tool					53035
Copper hammer		for driving in picks					5442
Assembly pliers	for retaining rings						5447
Pneumatic hammer	Pneumatic pick driver and ejector				with pick driver and ejector incl. accessories and compressed air hose		2723311
Ejector	for mini-picks						82747
Pick driver	pneumatic						84251
Pick ejector	Pneumatic pick driver and ejector						84252

TOOLS FOR MAINTENANCE AND ASSEMBLY

Genuine WIRTGEN tools for maintenance and assembly offer valuable assistance in the rapid replacement of picks and milling drums, among other tasks.

TOOLS FOR MAINTENANCE AND ASSEMBLY

Part	Version	Torque	Thread	Size	Package in-cludes	Width across flats	Part no.
Thread tap	for HT3		M24x2				101772
Hexagonal nut	for HT22 and HT11			24 mm – 3/4"			10539
Extension				3/4"			10747

TOOLS FOR MAINTENANCE AND ASSEMBLY							
Part	Version	Torque	Thread	Size	Package in-cludes	Width across flats	Part no.
Hexagon socket	for HT3			14 mm			11151
	for HT22 and HT11			17 mm			11886
Centring pin	Female thread		M22 x 1.5			17 mm	163632
Adapter for thread tap	for HT3						169132
	for HT22 and HT11						2089182
Thread tap	for HT15		M36x2		with cylindrical guide pin	22 mm	2189068
Hexagon socket	for HT15 square mount 1"			22 mm			2197997
Support	for MCS					65 mm	2660318
Extraction tool	for MCS						2669662
Thread tap	for HT22 + HT11		M30x2		with cylindrical guide pin	24 mm	2753140
Torque wrench		160 – 800 Nm					68273
Slip-on ratchet	right-turn 3/4“						97204

WIRTGEN

Original VÖGELE

SCREED

VÖGELE screeds comprise the heart of every road paver. The screed compacts the mix evenly across the entire paving width, creating a uniformly sealed surface texture.

Grade the pavement exactly to your client's specifications with reliable screeds from VÖGELE. Maximum precompaction guaranteed.

> Read more online

RUBBER COVER PANEL

Genuine VÖGELE rubber cover panels are available to fit any screed type. The covers are designed to provide optimum protection against any kind of contamination of the screed components.

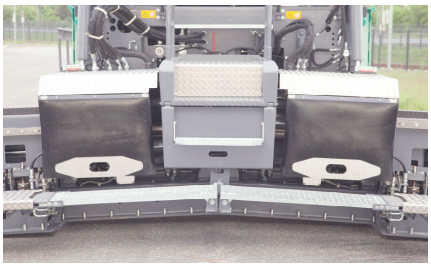

RUBBER COVER PANEL						
Series code	Serial code	Series range	Type	Screed version	Position	Part no.
AB 340	13AB	10 - 9999	for screeds	V; TV	left; right	2061052
			for screeds	V; TV	Centre	2062043
			for screeds	V; TV	left side; right side	2061044
AB 340-3	27AB	10 - 9999	for screeds		left side	2241885

RUBBER COVER PANEL

Series code	Serial code	Series range	Type	Screed version	Position	Part no.
AB 340-3	27AB	10 - 9999	for screeds		right side	2241887
			for screeds		left; right	2288003
AB 500	10AB	10 - 22	for screeds	TV; TP	left	4601350101
			for screeds	TV; TP	right	4601350102
		23 - 9999	for screeds	TV; TP	right	4601350156
			for screeds	TV; TP	left	4601350155
		126 - 9999	for screeds	TV; TP	left side	4601350187
			for screeds	TV; TP	right side	4601350188
AB 500-2	14AB	10 - 9999	for screeds	TV	left	2038478
			for screeds	TV	right	2038479
	15AB	10 - 9999	for screeds	TP	left	2038478
			for screeds	TP	right	2038479
AB 500-3	23AB	10 - 9999	for screeds	TV	right	2278337
			for screeds	TV	left	2278336
	24AB	10 - 9999	for screeds	TP	right	2278337
			for screeds	TP	left	2278336
AB 600	11AB	10 - 9999	for screeds	TV; TP	right	2002517
			for screeds	TV; TP	left	2002516
AB 600-2	16AB	10 - 9999	for screeds	TV	left	2060987
			for screeds	TV	right	2061004
	17AB	10 - 9999	for screeds	TP	left	2060987
			for screeds	TP	right	2061004
AB 600-3	25AB	10 - 9999	for screeds	TV	right	2278648
			for screeds	TV	left	2278635
	26AB	10 - 9999	for screeds	TP	right	2278648
			for screeds	TP	left	2278635

RUBBER COVER PANEL						
Series code	Serial code	Series range	Type	Screed version	Position	Part no.
VF 500-2	19AB	10 - 9999	for screeds	V	left	2223210
			for screeds	V	right	2223213
VF 600-2	20AB	10 - 9999	for screeds	V	right	2218031
			for screeds	V	left	2218027
VR 600-2	18AB	10 - 9999	for screeds	V	left	2180732
			for screeds	V	right	2180735
SB 250	02SB	10 - 9999	for screeds		right	4601350147
			for screeds		left	4601350146
SB 250-2	05SB	10 - 9999	for screeds		left	4601350146
			for screeds		right	4601350147
SB 300	03SB	10 - 9999	for screeds		right	4601350147
			for screeds		left	4601350146
SB 300-2	06SB	10 - 9999	for screeds		right	4601350145
			for screeds		left	4601350144
VF 500-3	30AB	10 - 9999	for screeds	V	right	2371019
			for screeds	V	left	2370993
VF 600-3	31AB	10 - 9999	for screeds	V	left	2370817
			for screeds	V	right	2370838

TELESCOPING TUBES

The tightest manufacturing tolerances allow us to maintain the high quality of our telescoping tubes throughout the entire production process. The telescoping tube set consists of an outer tube, an intermediate tube and an inner tube.

TELESCOPING TUBES

Series code	Serial code	Series range	Part	Package content	Extension	Version	Requirement	Part no.
AB 200	12AB	10 - 41	Scraper				2 pc.	2014682
			Outer tube				2 pc.	2035620
			Guide ring				2 pc.	2014681
			Piston rod				2 pc.	2014469
		42 - 9999	Scraper				4 pc.	2014682
			Outer tube				2 pc.	2037603
			Guide ring				8 pc.	2014680
							2 pc.	2014681
			Piston rod				2 pc.	2037604
AB 220-3	28AB	10 - 9999	Scraper				4 pc.	2014682
			Outer tube				2 pc.	2369616
			Guide ring				2 pc.	2014681
							8 pc.	2014680
			Piston rod				2 pc.	2369621
AB 340	13AB	10 - 9999	Scraper				4 pc.	2044142
			Outer tube				2 pc.	2043540
			Guide ring				8 pc.	2044139
							2 pc.	2044141
			Inner tube				2 pc.	2043553
AB 340-3	27AB	10 - 9999	Scraper				4 pc.	2044142

TELESCOPING TUBES								
Series code	Serial code	Series range	Part	Package content	Extension	Version	Requirement	Part no.
AB 340-3	27AB	10 - 9999	Outer tube				2 pc.	2043540
			Guide ring				2 pc.	2044141
							8 pc.	2044139
			Inner tube				2 pc.	2043553
AB 480-3	29AB	10 - 9999	Scraper ring			large	2 pc.	4604112059
						small	2 pc.	4604112068
			Teflon tape			for half shells	2 pc.	2349022
			Adhesive and hardener			for half shells	1 pc.	2013981
			Set of telescoping tubes	1x outer tube, 1x intermediate tube, 1x inner tube			2 pc.	2748034
AB 500	10AB	10 - 9999	Scraper ring			large	2 pc.	4604112059
						small	2 pc.	4604112068
			Teflon tape			for half shells	2 pc.	4624132029
			Adhesive and hardener			for half shells	1 pc.	2013981
			Set of telescoping tubes	1x outer tube, 1x intermediate tube, 1x inner tube			2 pc.	2005960
AB 500-2	14AB	10 - 9999	Scraper ring			large	2 pc.	4604112059
						small	2 pc.	4604112068
			Teflon tape			for half shells	2 pc.	4624132029
			Adhesive and hardener			for half shells	1 pc.	2013981
			Set of telescoping tubes	1x outer tube, 1x intermediate tube, 1x inner tube			2 pc.	2005960
	15AB	10 - 9999	Scraper ring			small	2 pc.	4604112068
						large	2 pc.	4604112059
			Teflon tape			for half shells	2 pc.	4624132029
			Adhesive and hardener			for half shells	1 pc.	2013981

TELESCOPING TUBES

Series code	Serial code	Series range	Part	Package content	Extension	Version	Requirement	Part no.
AB 500-2	15AB	10 - 9999	Set of telescoping tubes	1x outer tube, 1x intermediate tube, 1x inner tube			2 pc.	2005960
AB 500-3	23AB, 24AB	10 - 9999	Scraper ring			large	2 pc.	4604112059
						small	2 pc.	4604112068
			Sliding bearing				2 pc.	2211074
			Set of telescoping tubes	1x outer tube, 1x intermediate tube, 1x inner tube			2 pc.	2005960
AB 600	11AB	10 - 9999	Scraper ring			large	2 pc.	4604112059
						small	2 pc.	4604112068
			Teflon tape			for half shells	2 pc.	4624132029
			Adhesive and hardener			for half shells	1 pc.	2013981
			Set of telescoping tubes	1x outer tube, 1x intermediate tube, 1x inner tube			2 pc.	2038213
AB 600-2	16AB, 17AB	10 - 9999	Scraper ring			large	2 pc.	4604112059
						small	2 pc.	4604112068
			Teflon tape			for half shells	2 pc.	4624132029
			Adhesive and hardener			for half shells	1 pc.	2013981
			Set of telescoping tubes	1x outer tube, 1x intermediate tube, 1x inner tube			2 pc.	2038213
AB 600-3	25AB, 26AB	10 - 9999	Scraper ring			small	2 pc.	4604112068
						large	2 pc.	4604112059
			Sliding bearing				2 pc.	2211074
			Set of telescoping tubes	1x outer tube, 1x intermediate tube, 1x inner tube			2 pc.	2038213
VF 500-2	19AB	10 - 9999	Scraper ring				16 pc.	2140458
			Guide ring				48 pc.	2134632

TELESCOPING TUBES								
Series code	Serial code	Series range	Part	Package content	Extension	Version	Requirement	Part no.
VF 500-2	19AB	10 - 9999	Piston rod				8 pc.	2201947
VF 600-2	20AB	10 - 9999	Scraper ring				16 pc.	2140458
			Guide ring				48 pc.	2134632
			Piston rod				8 pc.	2134690
VR 600-2	18AB	10 - 9999	Scraper ring			small	2 pc.	4604112068
						large	2 pc.	4604112059
			Teflon tape			for half shells	2 pc.	4624132029
			Adhesive and hardener			for half shells	1 pc.	2013981
			Set of telescoping tubes	1x outer tube, 1x intermediate tube, 1x inner tube			2 pc.	2038213
SB 250	02SB	10 - 9999	Scraper		0.75 m	telescoping	4 pc.	9650060147
			Guide tube		0.75 m	telescoping	2 pc.	4617305116
SB 250-2	05SB	10 - 9999	Scraper		0.75 m	telescoping	4 pc.	9650060147
			Guide tube		0.75 m	telescoping	2 pc.	4617305116
SB 300	03SB	10 - 9999	Scraper		0.75 m	telescoping	4 pc.	9650060147
			Guide tube		0.75 m	telescoping	2 pc.	4617305116
SB 300-2	06SB	10 - 9999	Scraper		0.75 m	telescoping	4 pc.	9650060147
			Guide tube		0.75 m	telescoping	2 pc.	4617305116
VF 500-3	30AB	10 - 9999	Piston rod				8 pc.	2201947
VF 600-3	31AB	10 - 9999	Piston rod				8 pc.	2134690
AB 220	36AB	10 - 9999	Scraper				4 pc.	2014682
			Outer tube				2 pc.	2369616
			Guide ring				8 pc.	2014680
							2 pc.	2014681
			Piston rod				2 pc.	2369621
SB 300-3	07SB	10 - 9999	Scraper		1.25 m	telescoping	8 pc.	9650060147

TELESCOPING TUBES								
Series code	Serial code	Series range	Part	Package content	Extension	Version	Requirement	Part no.
SB 300-3	07SB	10 - 9999	Guide tube		1.25 m	telescoping	4 pc.	2463573
SB 350-3	08SB	10 - 9999	Scraper		1.25 m	telescoping	8 pc.	9650060147
			Guide tube		1.25 m	telescoping	4 pc.	2463573
SB 300-3	09SB	10 - 9999	Scraper		1.25 m	telescoping	8 pc.	9650060147
			Guide tube		1.25 m	telescoping	4 pc.	2463573
SB 350-3	10SB	10 - 9999	Scraper		1.25 m	telescoping	8 pc.	9650060147
			Guide tube		1.25 m	telescoping	4 pc.	2463573

SPRING STEEL STRIP

VÖGELE spring steel strips – which can also be replaced individually – serve to provide an elastic seal between the tamper bar and the tamper shield.

SPRING STEEL STRIP							
Series code	Serial code	Series range	Screed version	Position	Extension	Version	Part no.
AB 200	12AB	10 - 9999	TV	Extending screed, left; Extending screed, right			2023957
			TV	Basic screed, left			2024039
			TV	Basic screed, right			2024189
			TV	Screed extension, left; Screed extension, right	0.35 m		2028278
			TV	Screed extension, left; Screed extension, right	0.6 m		2030896
AB 220-3	28AB	10 - 9999	TV	Basic screed, left			2369784
			TV	Basic screed, right			2370371
			TV	Extending screed, left; Extending screed, right			2370536

SPRING STEEL STRIP							
Series code	Serial code	Series range	Screed version	Position	Extension	Version	Part no.
AB 220-3	28AB	10 - 9999	TV	Screed extension, left; Screed extension, right	0.5 m		2374772
AB 340	13AB	10 - 9999	TV	Extending screed, left; Extending screed, right			2044026
			TV	Screed extension, left; Screed extension, right	0.4 m		2051294
			TV	Screed extension, left; Screed extension, right	0.55 m		2047521
			TV	Basic screed, right			2044106
			TV	Basic screed, left			2044084
AB 340-3	27AB	10 - 9999	TV	Screed extension, left; Screed extension, right	0.55 m		2047521
			TV	Basic screed, right			2044106
			TV	Basic screed, left			2044084
			TV	Extending screed, left; Extending screed, right			2044026
			TV	Screed extension, left; Screed extension, right	0.8 m		2066900
AB 480-3	29AB	10 - 9999	TV	Basic screed, left; Basic screed, right; Extending screed, left; Extending screed, right			2027338
			TV	Screed extension, left; Screed extension, right	0.6 m		2356723
			TV	Screed extension, left; Screed extension, right	0.25 m		2041081

SPRING STEEL STRIP							
Series code	Serial code	Series range	Screed version	Position	Extension	Version	Part no.
AB 480-3	29AB	10 - 9999	TV	Screed extension, left; Screed extension, right	0.75 m		2038330
			TV	Screed extension, left; Screed extension, right	1.25 m		2038077
AB 500	10AB	10 - 9999		Screed extension, left; Screed extension, right	0.225 m		4615106726
				Screed extension, left; Screed extension, right	0.75 m		4615106692
				Basic screed, left; Basic screed, right; Extending screed, left; Extending screed, right			4615106688
				Screed extension, left; Screed extension, right	1.25 m		4615106734
AB 500-2	14AB	10 - 9999		Screed extension, left; Screed extension, right	0.75 m		2038330
				Screed extension, left; Screed extension, right	1.25 m		2038077
				Basic screed, left; Basic screed, right; Extending screed, left; Extending screed, right			2027338
				Screed extension, left; Screed extension, right	0.25 m		2041081
	15AB	10 - 9999		Basic screed, left; Basic screed, right; Extending screed, left; Extending screed, right			2027338

SPRING STEEL STRIP							
Series code	Serial code	Series range	Screed version	Position	Extension	Version	Part no.
AB 500-2	15AB	10 - 9999		Screed extension, left; Screed extension, right	1.25 m		2038077
				Screed extension, left; Screed extension, right	0.75 m		2038330
				Screed extension, left; Screed extension, right	0.25 m		2041081
AB 500-3	23AB	10 - 9999		Screed extension, left; Screed extension, right	0.75 m		2038330
				Screed extension, left; Screed extension, right	1.25 m		2038077
				Basic screed, left; Basic screed, right; Extending screed, left; Extending screed, right			2027338
				Screed extension, left; Screed extension, right	0.25 m		2041081
	24AB	10 - 9999		Basic screed, left; Basic screed, right; Extending screed, left; Extending screed, right			2027338
				Screed extension, left; Screed extension, right	1.25 m		2038077
				Screed extension, left; Screed extension, right	0.75 m		2038330
				Screed extension, left; Screed extension, right	0.25 m		2041081
AB 600	11AB	10 - 9999		Screed extension, left; Screed extension, right	0.75 m		4615106692

SPRING STEEL STRIP							
Series code	Serial code	Series range	Screed version	Position	Extension	Version	Part no.
AB 600	11AB	10 - 9999		Screed extension, left; Screed extension, right	0.225 m		4615106726
				Basic screed, left; Basic screed, right; Extending screed, left; Extending screed, right			4615106730
				Screed extension, left; Screed extension, right	1.25 m		4615106734
AB 600-2	16AB	10 - 9999		Screed extension, left; Screed extension, right	1.25 m		2038077
				Screed extension, left; Screed extension, right	0.75 m		2038330
				Screed extension, left; Screed extension, right	0.25 m		2041081
				Basic screed, left; Basic screed, right; Extending screed, left; Extending screed, right			2052396
	17AB	10 - 9999		Screed extension, left; Screed extension, right	1.25 m		2038077
				Screed extension, left; Screed extension, right	0.75 m		2038330
				Basic screed, left; Basic screed, right; Extending screed, left; Extending screed, right			2052396
				Screed extension, left; Screed extension, right	0.25 m		2041081

SPRING STEEL STRIP							
Series code	Serial code	Series range	Screed version	Position	Extension	Version	Part no.
AB 600-3	25AB	10 - 9999		Screed extension, left; Screed extension, right	1.25 m		2038077
				Screed extension, left; Screed extension, right	0.75 m		2038330
				Screed extension, left; Screed extension, right	0.25 m		2041081
				Basic screed, left; Basic screed, right; Extending screed, left; Extending screed, right			2052396
	26AB	10 - 9999		Screed extension, left; Screed extension, right	1.25 m		2038077
				Screed extension, left; Screed extension, right	0.25 m		2041081
				Screed extension, left; Screed extension, right	0.75 m		2038330
				Basic screed, left; Basic screed, right; Extending screed, left; Extending screed, right			2052396
SB 250	02SB	437 - 9999		Screed extension, left; Screed extension, right	1.0 m		2000269
				Screed extension, left; Screed extension, right	1.5 m		2000295
				Basic screed, left; Basic screed, right			4615106722
				Screed extension, left; Screed extension, right	0.75 m	telescoping	4615106711

SPRING STEEL STRIP							
Series code	Serial code	Series range	Screed version	Position	Extension	Version	Part no.
SB 250	02SB	437 - 9999		Screed extension, left; Screed extension, right	0.5 m		4615106600
				Screed extension, left; Screed extension, right	0.25 m		4615106598
SB 250-2	05SB	10 - 9999		Screed extension, left; Screed extension, right	0.25 m		2123464
				Basic screed, left; Basic screed, right			2123414
				Screed extension, left; Screed extension, right	0.5 m		2123476
				Screed extension, left; Screed extension, right	1.0 m		2123488
				Screed extension, left; Screed extension, right	1.5 m		2123516
				Screed extension, left; Screed extension, right	0.75 m	telescoping	2123654
SB 300	03SB	404 - 9999		Screed extension, left; Screed extension, right	1.0 m		2000269
				Basic screed, left; Basic screed, right			2000202
				Screed extension, left; Screed extension, right	1.5 m		2000295
				Screed extension, left; Screed extension, right	0.75 m	telescoping	4615106711
				Screed extension, left; Screed extension, right	0.5 m		4615106600
				Screed extension, left; Screed extension, right	0.25 m		4615106598

SPRING STEEL STRIP							
Series code	Serial code	Series range	Screed version	Position	Extension	Version	Part no.
SB 300-2	06SB	10 - 9999		Screed extension, left; Screed extension, right	0.25 m		2123464
				Basic screed, left; Basic screed, right			2123526
				Screed extension, left; Screed extension, right	0.5 m		2123476
				Screed extension, left; Screed extension, right	1.0 m		2123488
				Screed extension, left; Screed extension, right	1.5 m		2123516
				Screed extension, left; Screed extension, right	0.75 m	telescoping	2123654
AB 220	36AB	10 - 9999		Screed extension, left; Screed extension, right	0.5 m		2374772
				Extending screed, left; Extending screed, right			2370536
				Screed extension, left; Screed extension, right	0.65 m		2376481
				Basic screed, right			2370371
				Basic screed, left			2369784
SB 300-3	07SB	10 - 9999		Screed extension, left; Screed extension, right	1.25 m	telescoping	2027338
				Screed extension, left; Screed extension, right	1.5 m		2596521
				Screed extension, left; Screed extension, right	1.0 m		2595583
				Basic screed, left; Basic screed, right			2596691

SPRING STEEL STRIP							
Series code	Serial code	Series range	Screed version	Position	Extension	Version	Part no.
SB 300-3	07SB	10 - 9999		Screed extension, left; Screed extension, right	0.5 m		2615333
				Screed extension, left; Screed extension, right	0.25 m		2627093
SB 350-3	08SB	10 - 9999		Screed extension, left; Screed extension, right	0.25 m		2627093
				Screed extension, left; Screed extension, right	0.5 m		2615333
				Screed extension, left; Screed extension, right	1.5 m		2596521
				Basic screed, left; Basic screed, right			2599284
				Screed extension, left; Screed extension, right	1.25 m	telescoping	2027338
				Screed extension, left; Screed extension, right	1.0 m		2595583
SB 300-3	09SB	10 - 9999		Screed extension, left; Screed extension, right	1.25 m	telescoping	2027338
				Screed extension, left; Screed extension, right	0.5 m		2615333
				Screed extension, left; Screed extension, right	0.25 m		2627093
				Screed extension, left; Screed extension, right	1.0 m		2595583
				Basic screed, left; Basic screed, right			2596691
				Screed extension, left; Screed extension, right	1.5 m		2596521

SPRING STEEL STRIP							
Series code	Serial code	Series range	Screed version	Position	Extension	Version	Part no.
SB 350-3	10SB	10 - 9999		Screed extension, left; Screed extension, right	1.0 m		2595583
				Basic screed, left; Basic screed, right			2599284
				Screed extension, left; Screed extension, right	0.25 m		2627093
				Screed extension, left; Screed extension, right	1.5 m		2596521
				Screed extension, left; Screed extension, right	1.25 m	telescoping	2027338
				Screed extension, left; Screed extension, right	0.5 m		2615333

SLIDE RAILS AND SLIDING BLOCKS

VÖGELE slide rails and sliding blocks ensure that the paving process is highly precise. Perfectly compatible materials ensure that when lubricated regularly, the extending units remain free of play.

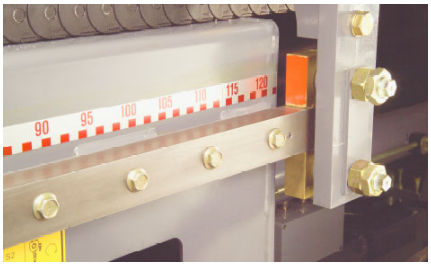

SLIDE RAILS AND SLIDING BLOCKS							
Series code	Serial code	Series range	Part	Extension	Version	Requirement	Part no.
AB 200	12AB	10 - 107	Sliding rail			2 pc.	2014112
		10 - 9999	Sliding block			2 pc.	2020401
						2 pc.	2020398
		108 - 9999	Sliding rail			2 pc.	2038101
AB 220-3	28AB	10 - 9999	Sliding rail			2 pc.	2369358

SLIDE RAILS AND SLIDING BLOCKS

Series code	Serial code	Series range	Part	Extension	Version	Requirement	Part no.
AB 220-3	28AB	10 - 9999	Sliding block			4 pc.	2242347
AB 340	13AB	10 - 9999	Sliding rail			2 pc.	2043185
			Sliding block			2 pc.	2020401
						2 pc.	2020398
AB 340-3	27AB	10 - 9999	Sliding rail			2 pc.	2043185
			Sliding block			4 pc.	2242347
AB 480-3	29AB	10 - 9999	Sliding rail			2 pc.	2348328
			Sliding block			4 pc.	4607252006
AB 500	10AB	10 - 9999	Sliding rail			2 pc.	2009647
			Sliding block			4 pc.	4607252008
AB 500-2	14AB, 15AB	10 - 9999	Sliding rail			2 pc.	2009647
			Sliding block			4 pc.	4607252008
AB 500-3	23AB, 24AB	10 - 9999	Sliding rail			2 pc.	2228916
			Sliding block			4 pc.	4607252008
AB 600	11AB	10 - 9999	Sliding rail			2 pc.	2014773
			Sliding block			4 pc.	4607252008
AB 600-2	16AB, 17AB	10 - 9999	Sliding rail			2 pc.	2014773
			Sliding block			4 pc.	4607252008
AB 600-3	25AB, 26AB	10 - 9999	Sliding rail			2 pc.	2228918
			Sliding block			4 pc.	4607252008
VR 600-2	18AB	10 - 9999	Sliding rail			2 pc.	2014773
			Sliding block			4 pc.	4607252008
SB 250	02SB	10 - 9999	Sliding rail	0.75 m	telescoping	2 pc.	4615106642
			Sliding block	0.75 m	telescoping	4 pc.	4607252006
SB 250-2	05SB	10 - 9999	Sliding rail	0.75 m	telescoping	2 pc.	4615106642
			Sliding block	0.75 m	telescoping	4 pc.	4607252006

SLIDE RAILS AND SLIDING BLOCKS							
Series code	Serial code	Series range	Part	Extension	Version	Requirement	Part no.
SB 300	03SB	10 - 9999	Sliding rail	0.75 m	telescoping	2 pc.	4615106642
			Sliding block	0.75 m	telescoping	4 pc.	4607252006
SB 300-2	06SB	10 - 9999	Sliding rail	0.75 m	telescoping	2 pc.	4615106642
			Sliding block	0.75 m	telescoping	4 pc.	4607252006
AB 220	36AB	10 - 9999	Sliding rail			2 pc.	2369358
			Sliding block			4 pc.	2242347

GENERATORS

VÖGELE generators supply your screeds with the optimum amount of power.

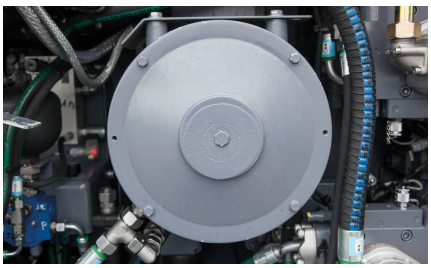

GENERATORS						
Series code	Serial code	Part	Please note	Version	Power	Part no.
SUPER 700	0790	Generator			5 kW at idle/8.5 kW at full speed	2014354
		Generator voltage regulator			5 kW at idle/8.5 kW at full speed	2489382
SUPER 700-3	0890	Generator			5 kW at idle/8.5 kW at full speed	2705334
					5 kW at idle/8.5 kW at full speed	2702320
SUPER 700-3i	0890	Generator			5 kW at idle/8.5 kW at full speed	2705334
					5 kW at idle/8.5 kW at full speed	2702320
SUPER 800	0790	Generator			5 kW at idle/8.5 kW at full speed	2014354
		Generator voltage regulator			5 kW at idle/8.5 kW at full speed	2489382
SUPER 800-3	0890	Generator			5 kW at idle/8.5 kW at full speed	2705334
					5 kW at idle/8.5 kW at full speed	2702320
SUPER 800-3i	0890	Generator			5 kW at idle/8.5 kW at full speed	2705334

GENERATORS						
Series code	Serial code	Part	Please note	Version	Power	Part no.
SUPER 800-3i	0890	Generator			5 kW at idle/8.5 kW at full speed	2702320
SUPER 700	0990	Generator			5 kW at idle/8.5 kW at full speed	2705334
					5 kW at idle/8.5 kW at full speed	2702320
SUPER 800	0990	Generator			5 kW at idle/8.5 kW at full speed	2705334
					5 kW at idle/8.5 kW at full speed	2702320
SUPER 700i	0990	Generator			5 kW at idle/8.5 kW at full speed	2705334
					5 kW at idle/8.5 kW at full speed	2702320
SUPER 800i	0990	Generator			5 kW at idle/8.5 kW at full speed	2705334
					5 kW at idle/8.5 kW at full speed	2702320
SUPER 1100-2	0811	Generator	V-belt (driven), already pre-assembled		7 kW at idle/13 kW at full speed	2044135
		Generator voltage regulator			7 kW at idle/13 kW at full speed	2489377
SUPER 1100-3	1011	Generator	V-belt (driven), already pre-assembled		10 kW at idle/13 kW at full speed	2220310
		Generator voltage regulator			10 kW at idle/13 kW at full speed	2555497
	1411	Generator			10 kW at idle/13 kW at full speed	2702309
		Generator voltage regulator			10 kW at idle/13 kW at full speed	2555497
SUPER 1100-3i	1011	Generator	V-belt (driven), already pre-assembled		10 kW at idle/13 kW at full speed	2220310
		Generator voltage regulator			10 kW at idle/13 kW at full speed	2555497
	1411	Generator			10 kW at idle/13 kW at full speed	2702309
		Generator voltage regulator			10 kW at idle/13 kW at full speed	2555497
SUPER 1103-2	0911	Generator	V-belt (driven), already pre-assembled		7 kW at idle/13 kW at full speed	2044135
		Generator voltage regulator			7 kW at idle/13 kW at full speed	2489377
SUPER 1103-3	1111	Generator	V-belt (driven), already pre-assembled		10 kW at idle/13 kW at full speed	2220310

GENERATORS						
Series code	Serial code	Part	Please note	Version	Power	Part no.
SUPER 1103-3	1111	Generator voltage regulator			10 kW at idle/13 kW at full speed	2555497
	1511	Generator			10 kW at idle/13 kW at full speed	2702309
		Generator voltage regulator			10 kW at idle/13 kW at full speed	2555497
SUPER 1103-3i	1111	Generator	V-belt (driven), already pre-assembled		10 kW at idle/13 kW at full speed	2220310
		Generator voltage regulator			10 kW at idle/13 kW at full speed	2555497
	1511	Generator			10 kW at idle/13 kW at full speed	2702309
		Generator voltage regulator			10 kW at idle/13 kW at full speed	2555497
SUPER 1300-2	0811	Generator	V-belt (driven), already pre-assembled		7 kW at idle/13 kW at full speed	2044135
		Generator voltage regulator			7 kW at idle/13 kW at full speed	2489377
SUPER 1300-3	1011	Generator	V-belt (driven), already pre-assembled		10 kW at idle/13 kW at full speed	2220310
		Generator voltage regulator			10 kW at idle/13 kW at full speed	2555497
	1411	Generator			10 kW at idle/13 kW at full speed	2702309
		Generator voltage regulator			10 kW at idle/13 kW at full speed	2555497
SUPER 1300-3i	1011	Generator	V-belt (driven), already pre-assembled		10 kW at idle/13 kW at full speed	2220310
		Generator voltage regulator			10 kW at idle/13 kW at full speed	2555497
	1411	Generator			10 kW at idle/13 kW at full speed	2702309
		Generator voltage regulator			10 kW at idle/13 kW at full speed	2555497
SUPER 1303-2	0911	Generator	V-belt (driven), already pre-assembled		7 kW at idle/13 kW at full speed	2044135
		Generator voltage regulator			7 kW at idle/13 kW at full speed	2489377
SUPER 1303-3	1111	Generator	V-belt (driven), already pre-assembled		10 kW at idle/13 kW at full speed	2220310
		Generator voltage regulator			10 kW at idle/13 kW at full speed	2555497

GENERATORS						
Series code	Serial code	Part	Please note	Version	Power	Part no.
SUPER 1303-3	1511	Generator			10 kW at idle/13 kW at full speed	2702309
		Generator voltage regulator			10 kW at idle/13 kW at full speed	2555497
SUPER 1303-3i	1111	Generator	V-belt (driven), already pre-assembled		10 kW at idle/13 kW at full speed	2220310
		Generator voltage regulator			10 kW at idle/13 kW at full speed	2555497
	1511	Generator			10 kW at idle/13 kW at full speed	2702309
		Generator voltage regulator			10 kW at idle/13 kW at full speed	2555497
SUPER 1600-1	0782	Generator			22 kW at idle/36 kW at full speed	2112706
					27 kW at idle/44 kW at full speed	2112726
					13 kW at idle/18 kW at full speed	2268452
		Generator voltage regulator			13 kW at idle/18 kW at full speed	3515043283
					22 kW at idle/36 kW at full speed; 27 kW at idle/44 kW at full speed	3515180021
	0982	Generator	V-belt (driven), already pre-assembled	Standard		2026061
			V-belt (driven), already pre-assembled	Power		2032544
		Generator voltage regulator	V-belt (driven), already pre-assembled	Standard; Power		2489387
SUPER 1600-2	1182	Generator			22 kW at idle/36 kW at full speed	2112706
					27 kW at idle/44 kW at full speed	2112726
					13 kW at idle/18 kW at full speed	2268452
		Generator voltage regulator			13 kW at idle/18 kW at full speed	3515043283
					22 kW at idle/36 kW at full speed; 27 kW at idle/44 kW at full speed	3515180021
SUPER 1600-3	1582	Generator		Standard		2408851
		Generator voltage regulator		Standard		2287963

GENERATORS						
Series code	Serial code	Part	Please note	Version	Power	Part no.
SUPER 1600-3i	1582	Generator		Standard		2408851
		Generator voltage regulator		Standard		2287963
SUPER 1603-1	0783	Generator			22 kW at idle/36 kW at full speed	2112706
					13 kW at idle/18 kW at full speed	2268452
		Generator voltage regulator			13 kW at idle/18 kW at full speed	3515043283
					22 kW at idle/36 kW at full speed	3515180021
SUPER 1603-2	0883	Generator			22 kW at idle/36 kW at full speed	2112706
					13 kW at idle/18 kW at full speed	2268452
		Generator voltage regulator			13 kW at idle/18 kW at full speed	3515043283
					22 kW at idle/36 kW at full speed	3515180021
SUPER 1603-3i	1183	Generator		Standard		2408851
		Generator voltage regulator		Standard		2287963
SUPER 1603-3	1183	Generator		Standard		2408851
		Generator voltage regulator		Standard		2287963
SUPER 1700-3	1982	Generator		Standard		2408851
		Generator voltage regulator		Standard		2287963
SUPER 1700-3i	1982	Generator		Standard		2408851
		Generator voltage regulator		Standard		2287963
SUPER 1703-3	1283	Generator		Standard		2408851
		Generator voltage regulator		Standard		2287963
SUPER 1703-3i	1283	Generator		Standard		2408851
		Generator voltage regulator		Standard		2287963
SUPER 1800-1	0782	Generator			22 kW at idle/36 kW at full speed	2112706
					27 kW at idle/44 kW at full speed	2112726
					13 kW at idle/18 kW at full speed	2268452
		Generator voltage regulator			13 kW at idle/18 kW at full speed	3515043283

GENERATORS						
Series code	Serial code	Part	Please note	Version	Power	Part no.
SUPER 1800-1	0782	Generator voltage regulator			22 kW at idle/36 kW at full speed; 27 kW at idle/44 kW at full speed	3515180021
	0982	Generator	V-belt (driven), already pre-assembled	Standard		2026061
			V-belt (driven), already pre-assembled	Power		2032544
		Generator voltage regulator	V-belt (driven), already pre-assembled	Standard; Power		2489387
SUPER 1800-2	1182	Generator			22 kW at idle/36 kW at full speed	2112706
					27 kW at idle/44 kW at full speed	2112726
					13 kW at idle/18 kW at full speed	2268452
		Generator voltage regulator			13 kW at idle/18 kW at full speed	3515043283
					22 kW at idle/36 kW at full speed; 27 kW at idle/44 kW at full speed	3515180021
SUPER 1800-3	1482	Generator		Power		2979914
				Standard		2979882
		Generator voltage regulator		Standard; Power		2222936
SUPER 1800-3i	1482	Generator		Power		2979914
				Standard		2979882
		Generator voltage regulator		Standard; Power		2222936
SUPER 1803-1	0783	Generator			22 kW at idle/36 kW at full speed	2112706
					13 kW at idle/18 kW at full speed	2268452
		Generator voltage regulator			13 kW at idle/18 kW at full speed	3515043283
					22 kW at idle/36 kW at full speed	3515180021
SUPER 1803-2	0883	Generator			22 kW at idle/36 kW at full speed	2112706
					13 kW at idle/18 kW at full speed	2268452
		Generator voltage regulator			13 kW at idle/18 kW at full speed	3515043283

GENERATORS						
Series code	Serial code	Part	Please note	Version	Power	Part no.
SUPER 1803-2	0883	Generator voltage regulator			22 kW at idle/36 kW at full speed	3515180021
SUPER 1803-3	1083	Generator		Standard		2979882
		Generator voltage regulator		Standard		2222936
SUPER 1803-3i	1083	Generator		Standard		2979882
		Generator voltage regulator		Standard		2222936
SUPER 1900-2	0719	Generator			22 kW at idle/36 kW at full speed	2112569
			V-belt (driven), already pre-assembled		27 kW at idle/44 kW at full speed	2112574
		Generator voltage regulator			22 kW at idle/36 kW at full speed; 27 kW at idle/44 kW at full speed	3515180021
SUPER 1900-3	0819	Generator		Standard		2979882
				Power		2979914
		Generator voltage regulator		Standard; Power		2222936
SUPER 1900-3i	0819	Generator		Standard		2979882
				Power		2979914
		Generator voltage regulator		Standard; Power		2222936
SUPER 2000-3	1174	Generator		Standard		2403721
		Generator voltage regulator		Standard		2372261
SUPER 2000-3i	1174	Generator		Standard		2403721
		Generator voltage regulator		Standard		2372261
SUPER 2003-3	0975	Generator		Standard		2403721
		Generator voltage regulator		Standard		2372261
SUPER 2003-3i	0975	Generator		Standard		2403721
		Generator voltage regulator		Standard		2372261
SUPER 2100-2	0719	Generator			22 kW at idle/36 kW at full speed	2112569
			V-belt (driven), already pre-assembled		27 kW at idle/44 kW at full speed	2112574

GENERATORS						
Series code	Serial code	Part	Please note	Version	Power	Part no.
SUPER 2100-2	0719	Generator voltage regulator			22 kW at idle/36 kW at full speed; 27 kW at idle/44 kW at full speed	3515180021
SUPER 2100-2 IP	0719	Generator	V-belt (driven), already pre-as-sembled	Power		2112574
		Generator voltage regulator		Power		3515180021
SUPER 2100-3	0819	Generator		Standard		2979882
				Power		2979914
		Generator voltage regulator		Standard; Power		2222936
SUPER 2100-3i	0819	Generator		Standard		2979882
				Power		2979914
		Generator voltage regulator		Standard; Power		2222936
SUPER 3000-2	0874	Generator		Power		2481085
		Generator voltage regulator		Power		2220300
SUPER 3000-3	1074	Generator		Power		2792104
		Generator voltage regulator		Power		2580523
SUPER 1800-2 SJ	1182	Generator			22 kW at idle/36 kW at full speed	2112706
					27 kW at idle/44 kW at full speed	2112726
					13 kW at idle/18 kW at full speed	2268452
		Generator voltage regulator			13 kW at idle/18 kW at full speed	3515043283
					22 kW at idle/36 kW at full speed; 27 kW at idle/44 kW at full speed	3515180021
SUPER 1800-3 SJ	1482	Generator		Power		2979914
				Standard		2979882
		Generator voltage regulator		Standard; Power		2222936
SUPER 1800-3i SJ	1482	Generator		Power		2979914
				Standard		2979882
		Generator voltage regulator		Standard; Power		2222936

GENERATORS						
Series code	Serial code	Part	Please note	Version	Power	Part no.
MT 3000-2	0761	Generator		Standard		2150018
		Generator voltage regulator		Standard		2489376
MT 3000-3	0861	Generator		Standard		2321471
		Generator voltage regulator		Standard		2489375
MT 3000-3i	0861	Generator		Standard		2321471
		Generator voltage regulator		Standard		2489375

SCREED PLATE

VÖGELE screed plates are designed to wear evenly over the entire surface. The use of highly wear-resistant steel noticeably extends the service life of the screed plates and thus the operational readiness of your machine.

SCREED PLATE									
Series code	Serial code	Series range	Berm	Screed plate depth	Screed version	Position	Exten-sion	Version	Part no.
AB 200	12AB	10 - 546			V	Extending screed, left			2014140
					V	Extending screed, right			2014137
					V	Basic screed, left; Basic screed, right			2014155
					V	Screed ex-tension, left; Screed ex-tension, right	0.35 m		2028016

SCREED PLATE

Series code	Serial code	Series range	Berm	Screed plate depth	Screed version	Position	Exten-sion	Version	Part no.
AB 200	12AB	10 - 9999			TV	Extending screed, left			2014140
					TV	Extending screed, right			2014137
					TV	Basic screed, left; Basic screed, right			2014155
					V	Screed ex-tension, left; Screed ex-tension, right	0.6 m		2057758
					TV	Screed ex-tension, left; Screed ex-tension, right	0.6 m		2030798
					TV	Screed ex-tension, left; Screed ex-tension, right	0.35 m		2028016
		547 - 9999			V	Extending screed, right			2057420
					V	Extending screed, left			2057411
					V	Basic screed, left; Basic screed, right			2057184
					V	Screed ex-tension, left; Screed ex-tension, right	0.35 m		2057718

SCREED PLATE									
Series code	Serial code	Series range	Berm	Screed plate depth	Screed version	Position	Exten-sion	Version	Part no.
AB 220-3	28AB	10 - 9999			TV	Basic screed, left; Basic screed, right			2369071
					V	Basic screed, left; Basic screed, right			2370427
					V	Extending screed, left			2370651
					V	Extending screed, right			2370668
					TV	Screed ex-tension, left; Screed ex-tension, right	0.65 m		2376221
					TV	Extending screed, left			2370689
					TV	Screed ex-tension, left; Screed ex-tension, right	0.5 m		2374066
					V	Screed ex-tension, left; Screed ex-tension, right	0.5 m		2375523
					TV	Extending screed, right			2370688
AB 340	13AB	10 - 9999			V	Extending screed, left			2060812

SCREED PLATE

Series code	Serial code	Series range	Berm	Screed plate depth	Screed version	Position	Exten-sion	Version	Part no.
AB 340	13AB	10 - 9999			V	Screed extension, left; Screed extension, right	0.4 m		2060829
					TV	Basic screed, left			2042760
					TV	Basic screed, right			2042924
					TV	Extending screed, left			2043503
					V	Extending screed, right			2060809
					TV	Screed extension, left; Screed extension, right	0.55 m		2046968
					TV	Screed extension, left; Screed extension, right	0.4 m		2050862
					V	Basic screed, right			2060781
					V	Basic screed, left			2060797
					TV	Extending screed, right			2043504
AB 340-3	27AB	10 - 9999			TV	Basic screed, right			2042924

SCREED PLATE									
Series code	Serial code	Series range	Berm	Screed plate depth	Screed version	Position	Exten-sion	Version	Part no.
AB 340-3	27AB	10 - 9999			TV	Extending screed, left			2043503
					TV	Extending screed, right			2043504
					TV	Screed ex-tension, left; Screed ex-tension, right	0.55 m		2046968
					TV	Screed ex-tension, left; Screed ex-tension, right	0.8 m		2066364
					V	Basic screed, right			2100925
					V	Basic screed, left			2243673
					V	Extending screed, right			2100931
					V	Screed ex-tension, left; Screed ex-tension, right	0.4 m		2134911
					TV	Screed ex-tension, left; Screed ex-tension, right	0.25 m		2158886
					V	Screed ex-tension, left; Screed ex-tension, right	0.25 m		2183855

SCREED PLATE

Series code	Serial code	Series range	Berm	Screed plate depth	Screed version	Position	Exten-sion	Version	Part no.
AB 340-3	27AB	10 - 9999			TV	Basic screed, left			2243191
					V	Extending screed, left			2100927
AB 480-3	29AB	10 - 9999			TV	Basic screed, left			2201289
					TV	Basic screed, right			2201290
					TV	Extending screed, left			2202435
					TV	Extending screed, right			2202445
					TV	Screed ex-tension, right	0.6 m		2357159
					TV	Screed ex-tension, left	0.75 m		2217007
					TV	Screed ex-tension, right	0.75 m		2217013
					TV	Screed ex-tension, left; Screed ex-tension, right	0.25 m		2222229
					TV	Screed ex-tension, left	0.6 m		2355463
					TV	Screed ex-tension, left; Screed ex-tension, right	1.25 m		2214303

SCREED PLATE									
Series code	Serial code	Series range	Berm	Screed plate depth	Screed version	Position	Exten-sion	Version	Part no.
AB 500	10AB	10 - 9999		330 mm	TV	Basic screed, left			2030819
				300 mm	TV; TP1; TP2	Screed ex-tension, left; Screed ex-tension, right	1.25 m		4602428228
				330 mm	TV	Extending screed, left			2030822
				330 mm	TV	Extending screed, right			2030823
				330 mm	TV	Screed ex-tension, left	0.75 m		2031131
				330 mm	TV	Screed ex-tension, right	0.75 m		2031132
				330 mm	TV	Screed ex-tension, left; Screed ex-tension, right	0.225 m		2032258
				300 mm	TV; TP1; TP2	Basic screed, left			4602426246
				300 mm	TV; TP1; TP2	Basic screed, right			4602426247
				300 mm	TV; TP1; TP2	Screed ex-tension, left	0.75 m		4602426519
				300 mm	TV; TP1; TP2	Screed ex-tension, right	0.75 m		4602426520
				300 mm	TV; TP1; TP2	Extending screed, left			4602427998

SCREED PLATE

Series code	Serial code	Series range	Berm	Screed plate depth	Screed version	Position	Exten-sion	Version	Part no.
AB 500	10AB	10 - 9999		300 mm	TV; TP1; TP2	Extending screed, right			4602427999
				300 mm	TV; TP1; TP2	Screed ex-tension, left; Screed ex-tension, right	0.225 m		4602428068
				330 mm	TV	Basic screed, right			2030820
AB 500-2	14AB	10 - 9999			TV	Screed ex-tension, left; Screed ex-tension, right	0.25 m		2040876
					TV	Basic screed, left			2042535
					TV	Basic screed, right			2042536
					TV	Screed ex-tension, left; Screed ex-tension, right	1.25 m		2043248
					TV	Extending screed, right			2042539
					TV	Screed ex-tension, left	0.75 m		2043246
					TV	Screed ex-tension, right	0.75 m		2043247
					TV	Extending screed, left			2042538

SCREED PLATE									
Series code	Serial code	Series range	Berm	Screed plate depth	Screed version	Position	Exten-sion	Version	Part no.
AB 500-2	15AB	10 - 9999			TP1; TP2	Screed extension, left; Screed extension, right	0.25 m		2040876
					TP1; TP2	Basic screed, left			2042535
					TP1; TP2	Basic screed, right			2042536
					TP1; TP2	Screed extension, left; Screed extension, right	1.25 m		2043248
					TP1; TP2	Extending screed, right			2042539
					TP1; TP2	Screed extension, left	0.75 m		2043246
					TP1; TP2	Screed extension, right	0.75 m		2043247
					TP1; TP2	Extending screed, left			2042538
AB 500-3	23AB	10 - 9999			TV	Basic screed, left			2201289
					TV	Basic screed, right			2201290
					TV	Extending screed, left			2202435

SCREED PLATE

Series code	Serial code	Series range	Berm	Screed plate depth	Screed version	Position	Exten-sion	Version	Part no.
AB 500-3	23AB	10 - 9999			TV	Screed extension, left; Screed extension, right	0.25 m		2222229
					TV	Screed extension, left; Screed extension, right	1.25 m		2214303
					TV	Screed extension, left	0.75 m		2217007
					TV	Screed extension, right	0.75 m		2217013
					TV	Extending screed, right			2202445
	24AB	10 - 9999			TP1; TP2	Basic screed, left			2201289
					TP1; TP2	Basic screed, right			2201290
					TP1; TP2	Extending screed, left			2202435
					TP1; TP2	Screed extension, left; Screed extension, right	0.25 m		2222229
					TP1; TP2	Screed extension, left; Screed extension, right	1.25 m		2214303
					TP1; TP2	Screed extension, left	0.75 m		2217007

SCREED PLATE									
Series code	Serial code	Series range	Berm	Screed plate depth	Screed version	Position	Exten-sion	Version	Part no.
AB 500-3	24AB	10 - 9999			TP1; TP2	Screed ex-tension, right	0.75 m		2217013
					TP1; TP2	Extending screed, right			2202445
AB 600	11AB	10 - 9999		330 mm	TV	Basic screed, left			2031119
				330 mm	TV	Basic screed, right			2031122
				330 mm	TV	Extending screed, left			2031125
				330 mm	TV	Extending screed, right			2031127
				330 mm	TV	Screed ex-tension, left	0.75 m		2031131
				330 mm	TV	Screed ex-tension, right	0.75 m		2031132
				330 mm	TV	Screed ex-tension, left; Screed ex-tension, right	0.225 m		2032258
				300 mm	TV; TP1; TP2	Screed ex-tension, left	0.75 m		4602426519
				300 mm	TV; TP1; TP2	Screed ex-tension, right	0.75 m		4602426520
				300 mm	TV; TP1; TP2	Screed ex-tension, left; Screed ex-tension, right	0.225 m		4602428068

SCREED PLATE									
Series code	Serial code	Series range	Berm	Screed plate depth	Screed version	Position	Exten-sion	Version	Part no.
AB 600	11AB	10 - 9999		300 mm	TV; TP1; TP2	Basic screed, left			4602428170
				300 mm	TV; TP1; TP2	Basic screed, right			4602428171
				300 mm	TV; TP1; TP2	Extending screed, left			4602428173
				300 mm	TV; TP1; TP2	Extending screed, right			4602428174
				300 mm	TV; TP1; TP2	Screed ex-tension, left; Screed ex-tension, right	1.25 m		4602428228
AB 600-2	16AB	10 - 9999			TV	Screed ex-tension, right	0.75 m		2043247
					TV	Screed ex-tension, left	0.75 m		2043246
					TV	Screed ex-tension, left; Screed ex-tension, right	0.25 m		2040876
					TV	Screed ex-tension, left; Screed ex-tension, right	1.25 m		2043248
					TV; TP1	Basic screed, left			2052858
					TV; TP1	Basic screed, right			2052859

SCREED PLATE									
Series code	Serial code	Series range	Berm	Screed plate depth	Screed version	Position	Exten-sion	Version	Part no.
AB 600-2	16AB	10 - 9999			TV; TP1	Extending screed, left			2052887
					TV; TP1	Extending screed, right			2052893
	17AB	10 - 9999			TP1; TP2	Screed ex-tension, right	0.75 m		2043247
					TP1; TP2	Screed ex-tension, left	0.75 m		2043246
					TP1; TP2	Screed ex-tension, left; Screed ex-tension, right	0.25 m		2040876
					TP1; TP2	Screed ex-tension, left; Screed ex-tension, right	1.25 m		2043248
					TP2	Extending screed, right			2052893
					TP2	Extending screed, left			2052887
					TP2	Basic screed, right			2052859
					TP2	Basic screed, left			2052858
AB 600-3	25AB	10 - 9999			TV	Basic screed, right			2211812
					TV	Basic screed, left			2211817

SCREED PLATE

Series code	Serial code	Series range	Berm	Screed plate depth	Screed version	Position	Exten-sion	Version	Part no.
AB 600-3	25AB	10 - 9999			TV	Extending screed, left			2211964
					TV	Screed ex-tension, right	0.75 m		2217013
					TV	Screed ex-tension, left	0.75 m		2217007
					TV	Screed ex-tension, left; Screed ex-tension, right	1.25 m		2214303
					TV	Extending screed, right			2211967
					TV	Screed ex-tension, left; Screed ex-tension, right	0.25 m		2222229
	26AB	10 - 9999			TP1; TP2	Basic screed, left			2211817
					TP1; TP2	Extending screed, left			2211964
					TP1; TP2	Extending screed, right			2211967
					TP1; TP2	Screed ex-tension, left; Screed ex-tension, right	1.25 m		2214303
					TP1; TP2	Screed ex-tension, left	0.75 m		2217007

SCREED PLATE									
Series code	Serial code	Series range	Berm	Screed plate depth	Screed version	Position	Exten-sion	Version	Part no.
AB 600-3	26AB	10 - 9999			TP1; TP2	Screed ex-tension, right	0.75 m		2217013
					TP1; TP2	Screed ex-tension, left; Screed ex-tension, right	0.25 m		2222229
					TP1; TP2	Basic screed, right			2211812
VF 500-2	19AB	10 - 9999	with 457 mm berm		V	Extending screed, right			2460052
			with 457 mm berm		V	Extending screed, left			2460050
			with 610 mm berm		V	Extending screed, right			2460399
					V	Basic screed, left; Basic screed, right			2478970
			no berm, 60°		V	Extending screed, left			2504505
			no berm, 60°		V	Extending screed, right			2504583
			no berm, 90°		V	Extending screed, left			2527665
			no berm, 90°		V	Extending screed, right			2527716

SCREED PLATE

Series code	Serial code	Series range	Berm	Screed plate depth	Screed version	Position	Exten-sion	Version	Part no.
VF 500-2	19AB	10 - 9999			V	Screed extension, left; Screed extension, right	0.305 m	60°	2561166
					V	Screed extension, left; Screed extension, right	0.61 m	60°	2561603
					V	Screed extension, left; Screed extension, right	0.305 m	90°	2169392
					V	Screed extension, left; Screed extension, right	0.61 m	90°	2171115
			with 305 mm berm		V	Extending screed, left			2460030
			with 305 mm berm		V	Extending screed, right			2460033
			with 610 mm berm		V	Extending screed, left			2460397
VF 600-2	20AB	10 - 9999			V	Screed extension, left; Screed extension, right	0.305 m	90°	2169392
					V	Screed extension, left; Screed extension, right	0.61 m	60°	2561603
			with 305 mm berm		V	Extending screed, left			2460596

SCREED PLATE									
Series code	Serial code	Series range	Berm	Screed plate depth	Screed version	Position	Exten-sion	Version	Part no.
VF 600-2	20AB	10 - 9999	with 305 mm berm		V	Extending screed, right			2460601
			with 457 mm berm		V	Extending screed, left			2460704
			with 457 mm berm		V	Extending screed, right			2460705
			with 610 mm berm		V	Extending screed, left			2460997
			with 610 mm berm		V	Extending screed, right			2461000
					V	Basic screed, left; Basic screed, right			2478991
			no berm, 60°		V	Extending screed, left			2523038
			no berm, 60°		V	Extending screed, right			2523085
			no berm, 90°		V	Extending screed, left			2527743
			no berm, 90°		V	Extending screed, right			2527746
					V	Screed ex-tension, left; Screed ex-tension, right	0.305 m	60°	2561166

SCREED PLATE

Series code	Serial code	Series range	Berm	Screed plate depth	Screed version	Position	Exten-sion	Version	Part no.
VF 600-2	20AB	10 - 9999			V	Screed ex-tension, left; Screed ex-tension, right	0.61 m	90°	2171115
VR 600-2	18AB	10 - 9999			V	Extending screed, left			2119871
					V	Extending screed, right			2120665
					V	Basic screed, right			2171789
					V	Screed ex-tension, right	0.65 m		2126171
					V	Basic screed, left			2171786
					V	Screed ex-tension, left	0.65 m		2123601
SB 250	02SB	10 - 9999				Screed ex-tension, left	1.5 m		4602418084
						Screed ex-tension, right	1.5 m		4602418085
						Screed ex-tension, left	1.0 m		4602418086
						Screed ex-tension, right	1.0 m		4602418087
						Screed ex-tension, right	0.75 m	telescop-ing	4602425220

SCREED PLATE									
Series code	Serial code	Series range	Berm	Screed plate depth	Screed version	Position	Exten-sion	Version	Part no.
SB 250	02SB	10 - 9999				Screed extension, left; Screed extension, right	0.25 m		4602418642
						Basic screed, left			4602418916
						Basic screed, right			4602418917
						Screed extension, left	0.75 m	telescoping	4602425219
						Screed extension, left; Screed extension, right	0.5 m		4602418098
SB 250-2	05SB	10 - 9999				Screed extension, left	1.5 m		4602418084
						Screed extension, right	1.5 m		4602418085
						Screed extension, left	1.0 m		4602418086
						Screed extension, right	1.0 m		4602418087
						Screed extension, right	0.75 m	telescoping	4602425220
						Screed extension, left; Screed extension, right	0.25 m		4602418642

SCREED PLATE

Series code	Serial code	Series range	Berm	Screed plate depth	Screed version	Position	Extension	Version	Part no.
SB 250-2	05SB	10 - 9999				Basic screed, left			4602418916
						Basic screed, right			4602418917
						Screed extension, left	0.75 m	telescoping	4602425219
						Screed extension, left; Screed extension, right	0.5 m		4602418098
SB 300	03SB	10 - 9999				Basic screed, left			4602418082
						Basic screed, right			4602418083
						Screed extension, left	1.5 m		4602418084
						Screed extension, right	1.5 m		4602418085
						Screed extension, right	0.75 m	telescoping	4602425220
						Screed extension, right	1.0 m		4602418087
						Screed extension, left; Screed extension, right	0.5 m		4602418098

SCREED PLATE									
Series code	Serial code	Series range	Berm	Screed plate depth	Screed version	Position	Exten-sion	Version	Part no.
SB 300	03SB	10 - 9999				Screed ex-tension, left; Screed ex-tension, right	0.25 m		4602418642
						Screed ex-tension, left	0.75 m	telescop-ing	4602425219
						Screed ex-tension, left	1.0 m		4602418086
SB 300-2	06SB	10 - 9999				Basic screed, left			4602418082
						Basic screed, right			4602418083
						Screed ex-tension, left	1.5 m		4602418084
						Screed ex-tension, right	1.5 m		4602418085
						Screed ex-tension, right	0.75 m	telescop-ing	4602425220
						Screed ex-tension, right	1.0 m		4602418087
						Screed ex-tension, left; Screed ex-tension, right	0.5 m		4602418098
						Screed ex-tension, left; Screed ex-tension, right	0.25 m		4602418642

SCREED PLATE

Series code	Serial code	Series range	Berm	Screed plate depth	Screed version	Position	Exten-sion	Version	Part no.
SB 300-2	06SB	10 - 9999				Screed ex-tension, left	0.75 m	telescop-ing	4602425219
						Screed ex-tension, left	1.0 m		4602418086
VF 500-3	30AB	10 - 9999	no berm, 60°		V	Extending screed, right			2504583
			no berm, 60°		V	Extending screed, left			2504505
					V	Basic screed, left; Basic screed, right			2669627
					V	Screed ex-tension, left; Screed ex-tension, right	0.305 m	60°	2561166
					V	Screed ex-tension, left; Screed ex-tension, right	0.61 m	60°	2561603
VF 600-3	31AB	10 - 9999			V	Screed ex-tension, left; Screed ex-tension, right	0.61 m	60°	2561603
					V	Basic screed, left; Basic screed, right			2647410
			no berm, 60°		V	Extending screed, right			2523085

SCREED PLATE									
Series code	Serial code	Series range	Berm	Screed plate depth	Screed version	Position	Exten-sion	Version	Part no.
VF 600-3	31AB	10 - 9999			V	Screed ex-tension, left; Screed ex-tension, right	0.305 m	60°	2561166
					V	Extending screed, left			2523035
AB 220	36AB	10 - 9999			TV	Extending screed, left			2370689
					TV	Extending screed, right			2370688
					V	Extending screed, right			2370668
					V	Extending screed, left			2370651
					V	Basic screed, left; Basic screed, right			2370427
					TV	Basic screed, left; Basic screed, right			2369071
					TV	Screed ex-tension, left; Screed ex-tension, right	0.5 m		2374066
					TV	Screed ex-tension, left; Screed ex-tension, right	0.25 m		2502903

SCREED PLATE

Series code	Serial code	Series range	Berm	Screed plate depth	Screed version	Position	Exten-sion	Version	Part no.
AB 220	36AB	10 - 9999			V	Screed ex-tension, left; Screed ex-tension, right	0.25 m		2503787
					TV	Screed ex-tension, left; Screed ex-tension, right	0.65 m		2376221
					V	Screed ex-tension, left; Screed ex-tension, right	0.5 m		2375523
SB 300-3	07SB	10 - 9999				Basic screed, left			2600739
						Basic screed, right			2600806
						Screed ex-tension, left; Screed ex-tension, right	0.25 m		2625424
						Screed ex-tension, left; Screed ex-tension, right	0.5 m		2613999
						Screed ex-tension, left; Screed ex-tension, right	1.0 m		2670833
						Screed ex-tension, right	1.25 m	telescop-ing	2202445
					Telescop-ing exten-sion 1 m to 1.25 m	Screed ex-tension, right	1.0 m		2762794

SCREED PLATE									
Series code	Serial code	Series range	Berm	Screed plate depth	Screed version	Position	Extension	Version	Part no.
SB 300-3	07SB	10 - 9999				Screed extension, left	1.25 m	telescoping	2202435
					Telescoping extension 1.5 m to 1.25 m	Screed extension, right	1.5 m		2763043
					Telescoping extension 1.5 m to 1.25 m	Screed extension, left	1.5 m		2763031
						Screed extension, left; Screed extension, right	1.5 m		2670995
					Telescoping extension 1 m to 1.25 m	Screed extension, left	1.0 m		2762784
SB 350-3	08SB	10 - 9999				Screed extension, left	1.25 m	telescoping	2202435
						Screed extension, right	1.25 m	telescoping	2202445
						Basic screed, left			2609135
						Basic screed, right			2609144
						Screed extension, left; Screed extension, right	0.25 m		2625424
						Screed extension, left; Screed extension, right	0.5 m		2613999

SCREED PLATE

Series code	Serial code	Series range	Berm	Screed plate depth	Screed version	Position	Extension	Version	Part no.
SB 350-3	08SB	10 - 9999				Screed extension, left; Screed extension, right	1.0 m		2670833
					Telescoping extension 1 m to 1.25 m	Screed extension, left	1.0 m		2762784
					Telescoping extension 1 m to 1.25 m	Screed extension, right	1.0 m		2762794
						Screed extension, left; Screed extension, right	1.5 m		2670995
					Telescoping extension 1.5 m to 1.25 m	Screed extension, left	1.5 m		2763031
					Telescoping extension 1.5 m to 1.25 m	Screed extension, right	1.5 m		2763043
SB 300-3	09SB	10 - 9999				Screed extension, left; Screed extension, right	1.5 m		2670995
					Telescoping extension 1 m to 1.25 m	Screed extension, right	1.0 m		2762794
					Telescoping extension 1 m to 1.25 m	Screed extension, left	1.0 m		2762784
						Screed extension, left; Screed extension, right	1.0 m		2670833

SCREED PLATE									
Series code	Serial code	Series range	Berm	Screed plate depth	Screed version	Position	Exten-sion	Version	Part no.
SB 300-3	09SB	10 - 9999				Screed ex-tension, left; Screed ex-tension, right	0.5 m		2613999
					Telescop-ing exten-sion 1.5 m to 1.25 m	Screed ex-tension, left	1.5 m		2763031
						Basic screed, right			2600806
						Basic screed, left			2600739
						Screed ex-tension, right	1.25 m	telescop-ing	2202445
						Screed ex-tension, left	1.25 m	telescop-ing	2202435
					Telescop-ing exten-sion 1.5 m to 1.25 m	Screed ex-tension, right	1.5 m		2763043
						Screed ex-tension, left; Screed ex-tension, right	0.25 m		2625424
SB 350-3	10SB	10 - 9999				Screed ex-tension, left; Screed ex-tension, right	1.5 m		2670995
					Telescop-ing exten-sion 1 m to 1.25 m	Screed ex-tension, right	1.0 m		2762794
					Telescop-ing exten-sion 1 m to 1.25 m	Screed ex-tension, left	1.0 m		2762784

SCREED PLATE

Series code	Serial code	Series range	Berm	Screed plate depth	Screed version	Position	Extension	Version	Part no.
SB 350-3	10SB	10 - 9999				Screed extension, left; Screed extension, right	1.0 m		2670833
						Screed extension, left; Screed extension, right	0.5 m		2613999
						Screed extension, left; Screed extension, right	0.25 m		2625424
						Basic screed, right			2609144
						Basic screed, left			2609135
						Screed extension, right	1.25 m	telescoping	2202445
					Telescoping extension 1.5 m to 1.25 m	Screed extension, left	1.5 m		2763031
					Telescoping extension 1.5 m to 1.25 m	Screed extension, right	1.5 m		2763043
						Screed extension, left	1.25 m	telescoping	2202435

HEATING RODS

VÖGELE heating rods for tamper bars, pressure bars and screed plates are a central element of the electric screed heating system. Their ease of installation makes maintenance and replacement easier.

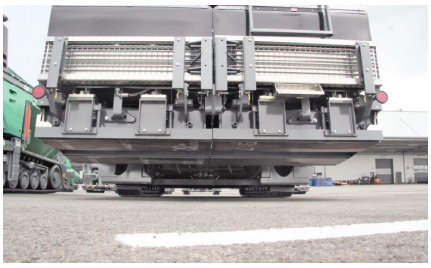

HEATING RODS				
Series code	Serial code	Series range	Details	Part no.
AB 200	12AB	10 - 546	**Requirement | Type | Screed version** 4 pc. | for screed plate | V	2013521
			Requirement | Type | Extension | Screed version 2 pc. | for screed plate | 0.35 m | V	2014017
		10 - 9999	**Requirement | Type | Extension | Screed version** 2 pc. | for screed plate | 0.35 m | TV	2014017
			Requirement | Type | Screed version 4 pc. | for tamper bar and pressure bar | TV	2013523
			Requirement | Type | Screed version 4 pc. | for screed plate | TV	2013521
			Requirement | Type | Extension | Screed version 2 pc. | for tamper bar and pressure bar | 0.35 m | TV	2014019
			Requirement | Type | Extension | Screed version 2 pc. | for screed plate | 0.6 m | V	2057080
			Requirement | Type | Extension | Screed version 2 pc. | for screed plate | 0.6 m | TV	2030954
			Requirement | Type | Extension | Screed version 2 pc. | for tamper bar and pressure bar | 0.6 m | TV	2030992
		547 - 9999	**Requirement | Type | Screed version** 4 pc. | for screed plate | V	2057071
			Requirement | Type | Extension | Screed version 2 pc. | for screed plate | 0.35 m | V	2057073
AB 220-3	28AB	10 - 9999	**Requirement | Type | Screed version** 4 pc. | for screed plate | TV	2342131
			Requirement | Type | Screed version 4 pc. | for tamper bar and pressure bar | TV	2368902
			Requirement | Type | Extension | Screed version 2 pc. | for screed plate | 0.5 m | TV	2372972
			Requirement | Type | Screed version 4 pc. | for screed plate | V	2341960
			Requirement | Type | Extension | Screed version 2 pc. | for screed plate | 0.5 m | V	2375552
			Requirement | Type | Extension | Screed version 2 pc. | for tamper bar and pressure bar | 0.65 m | TV	2376402
			Requirement | Type | Extension | Screed version 2 pc. | for screed plate | 0.65 m | TV	2376443
			Requirement | Type | Extension | Screed version 2 pc. | for tamper bar and pressure bar | 0.5 m | TV	2374683
AB 340	13AB	10 - 9999	**Requirement | Type | Screed version** 4 pc. | for screed plate | TV	2043840

HEATING RODS

Series code	Serial code	Series range	Details	Part no.
AB 340	13AB	10 - 9999	**Requirement | Type | Screed version** 4 pc. | for tamper bar and pressure bar | TV	2044960
			Requirement | Type | Extension | Screed version 2 pc. | for tamper bar and pressure bar | 0.55 m | TV	2047003
			Requirement | Type | Extension | Screed version 2 pc. | for screed plate | 0.55 m | TV	2047175
			Requirement | Type | Extension | Screed version 2 pc. | for tamper bar and pressure bar | 0.4 m | TV	2051126
			Requirement | Type | Extension | Screed version 2 pc. | for screed plate | 0.4 m | TV	2051149
			Requirement | Type | Extension | Screed version 2 pc. | for screed plate | 0.4 m | V	2060750
			Requirement | Type | Screed version 4 pc. | for screed plate | V	2060753
		402 - 9999	**Requirement | Type | Extension | Screed version** 2 pc. | for screed plate | 0.8 m | TV	2067119
			Requirement | Type | Extension | Screed version 2 pc. | for tamper bar and pressure bar | 0.8 m | TV	2067126
		623 - 9999	**Requirement | Type | Extension | Screed version** 2 pc. | for tamper bar and pressure bar | 0.25 m | TV	2157593
			Requirement | Type | Extension | Screed version 2 pc. | for screed plate | 0.25 m | TV	2158785
		814 - 9999	**Requirement | Type | Extension | Screed version** 2 pc. | for screed plate | 0.25 m | V	2158785
AB 340-3	27AB	10 - 9999	**Requirement | Type | Screed version** 4 pc. | for screed plate | V	2275929
			Requirement | Type | Screed version 4 pc. | for screed plate | TV	2275932
			Requirement | Type | Screed version 4 pc. | for tamper bar and pressure bar | TV	2044960
			Requirement | Type | Extension | Screed version 2 pc. | for tamper bar and pressure bar | 0.55 m | TV	2047003
			Requirement | Type | Extension | Screed version 2 pc. | for tamper bar and pressure bar | 0.8 m | TV	2255040
			Requirement | Type | Extension | Screed version 2 pc. | for screed plate | 0.4 m | V	2060750
			Requirement | Type | Extension | Screed version 2 pc. | for tamper bar and pressure bar | 0.25 m | TV	2157593
			Requirement | Type | Extension | Screed version 2 pc. | for screed plate | 0.25 m | V; 2 pc. | for screed plate | 0.25 m | TV	2158785
			Requirement | Type | Extension | Screed version 2 pc. | for screed plate | 0.8 m | TV	2255038
			Requirement | Type | Extension | Screed version 2 pc. | for screed plate | 0.55 m | TV	2047175
AB 480-3	29AB	10 - 9999	**Requirement | Type | Extension | Screed version** 4 pc. | for tamper bar and pressure bar | | TV; 2 pc. | for tamper bar and pressure bar | 1.25 m | TV	2035050
			Requirement | Type | Extension | Screed version 2 pc. | for tamper bar and pressure bar | 0.75 m | TV	2035055

HEATING RODS

Series code	Serial code	Series range	Details	Part no.
AB 480-3	29AB	10 - 9999	**Requirement | Type | Extension | Screed version | Position** 1 pc. | for screed plate | | TV | Basic screed, left; 1 pc. | for screed plate | | TV | Extending screed, right; 1 pc. | for screed plate | 1.25 m | TV | left	2035986
			Requirement | Type | Extension | Screed version | Position 1 pc. | for screed plate | | TV | Basic screed, right; 1 pc. | for screed plate | | TV | Extending screed, left; 1 pc. | for screed plate | 1.25 m | TV | right	2035992
			Requirement | Type | Extension | Screed version | Position 1 pc. | for screed plate | 0.75 m | TV | left	2036690
			Requirement | Type | Extension | Screed version | Position 1 pc. | for screed plate | 0.6 m | TV | left	2358768
			Requirement | Type | Extension | Screed version 2 pc. | for tamper bar and pressure bar | 0.25 m | TV	2041147
			Requirement | Type | Extension | Screed version | Position 1 pc. | for screed plate | 0.25 m | TV | left	2041149
			Requirement | Type | Extension | Screed version | Position 1 pc. | for screed plate | 0.25 m | TV | right	2041151
			Requirement | Type | Extension | Screed version 2 pc. | for tamper bar and pressure bar | 0.6 m | TV	2347597
			Requirement | Type | Extension | Screed version | Position 1 pc. | for screed plate | 0.6 m | TV | right	2358763
			Requirement | Type | Extension | Screed version | Position 1 pc. | for screed plate | 0.75 m | TV | right	2036728
AB 500	10AB	10 - 9999	**Requirement | Type | Screed version** 4 pc. | for screed plate | TV	4608150166
			Requirement | Use | Extension | Screed version 2 pc. | Additional heating rod for increased heating power for screed extensions | 1.25 m | TV; 2 pc. | Additional heating rod for increased heating power for screed extensions | 1.25 m | TP1; 2 pc. | Additional heating rod for increased heating power for screed extensions | 1.25 m | TP2	4608150211
			Requirement | Type | Extension | Screed version 4 pc. | for tamper bar and pressure bar | | TV; 4 pc. | for tamper bar and pressure bar | 1.25 m | TP1; 8 pc. | for tamper bar and pressure bar | | TP1; 12 pc. | for tamper bar and pressure bar | | TP2; 2 pc. | for tamper bar and pressure bar | 1.25 m | TV; 6 pc. | for tamper bar and pressure bar | 1.25 m | TP2	4608150169
			Requirement | Type | Extension | Screed version 2 pc. | for screed plate | 0.75 m | TV	4608150170
			Requirement | Use | Extension | Screed version 2 pc. | Additional heating rod for increased heating power for screed extensions | 0.75 m | TV; 2 pc. | Additional heating rod for increased heating power for screed extensions | 0.75 m | TP1; 2 pc. | Additional heating rod for increased heating power for screed extensions | 0.75 m | TP2	4608150171

HEATING RODS

Series code	Serial code	Series range	Details	Part no.
AB 500	10AB	10 - 9999	**Requirement | Type | Extension | Screed version** 2 pc. | for screed plate | 0.75 m | TP2	4608150172
			Requirement | Type | Extension | Screed version 2 pc. | for tamper bar and pressure bar | 0.75 m | TV; 4 pc. | for tamper bar and pressure bar | 0.75 m | TP1; 6 pc. | for tamper bar and pressure bar | 0.75 m | TP2	4608150174
			Requirement | Type | Extension | Screed version 2 pc. | for tamper bar and pressure bar | 0.225 m | TV; 4 pc. | for tamper bar and pressure bar | 0.225 m | TP1; 6 pc. | for tamper bar and pressure bar | 0.225 m | TP2	4608150189
			Requirement | Type | Screed version 4 pc. | for screed plate | TP1; 4 pc. | for screed plate | TP2	4608150190
			Requirement | Type | Extension | Screed version 2 pc. | for screed plate | 0.75 m | TP1	4608150191
			Requirement | Use | Screed version 4 pc. | Additional heating rod for increased heating power for screeds | TV; 4 pc. | Additional heating rod for increased heating power for screeds | TP1; 4 pc. | Additional heating rod for increased heating power for screeds | TP2	4608150192
			Requirement | Use | Extension | Screed version 2 pc. | Additional heating rod for increased heating power for screed extensions | 0.75 m | TV; 2 pc. | Additional heating rod for increased heating power for screed extensions | 0.75 m | TP1; 2 pc. | Additional heating rod for increased heating power for screed extensions | 0.75 m | TP2	4608150193
			Requirement | Type | Extension | Screed version 2 pc. | for screed plate | 0.225 m | TV; 2 pc. | for screed plate | 0.225 m | TP1; 2 pc. | for screed plate | 0.225 m | TP2	4608150195
			Requirement | Type | Extension | Screed version 2 pc. | for screed plate | 1.25 m | TV; 2 pc. | for screed plate | 1.25 m | TP1; 2 pc. | for screed plate | 1.25 m | TP2	4608150204
			Requirement | Use | Extension | Screed version 2 pc. | Additional heating rod for increased heating power for screed extensions | 1.25 m | TV; 2 pc. | Additional heating rod for increased heating power for screed extensions | 1.25 m | TP1; 2 pc. | Additional heating rod for increased heating power for screed extensions | 1.25 m | TP2	4608150209
			Requirement | Use | Screed version 4 pc. | Additional heating rod for increased heating power for screeds | TV; 4 pc. | Additional heating rod for increased heating power for screeds | TP1; 4 pc. | Additional heating rod for increased heating power for screeds | TP2	4608150167
AB 500-2	14AB	10 - 9999	**Requirement | Type | Extension | Screed version** 4 pc. | for tamper bar and pressure bar | | TV; 2 pc. | for tamper bar and pressure bar | 1.25 m | TV	2035050

HEATING RODS

Series code	Serial code	Series range	Details	Part no.
AB 500-2	14AB	10 - 9999	**Requirement | Type | Extension | Screed version** 2 pc. | for tamper bar and pressure bar | 0.75 m | TV	2035055
			Requirement | Type | Extension | Screed version | Position 1 pc. | for screed plate | | TV | Basic screed, left; 1 pc. | for screed plate | | TV | Extending screed, right; 1 pc. | for screed plate | 1.25 m | TV | left	2035986
			Requirement | Type | Extension | Screed version | Position 1 pc. | for screed plate | | TV | Basic screed, right; 1 pc. | for screed plate | | TV | Extending screed, left; 1 pc. | for screed plate | 1.25 m | TV | right	2035992
			Requirement | Type | Extension | Screed version | Position 1 pc. | for screed plate | 0.25 m | TV | right	2041151
			Requirement | Type | Extension | Screed version | Position 1 pc. | for screed plate | 0.75 m | TV | right	2036728
			Requirement | Type | Extension | Screed version 2 pc. | for tamper bar and pressure bar | 0.25 m | TV	2041147
			Requirement | Type | Extension | Screed version | Position 1 pc. | for screed plate | 0.25 m | TV | left	2041149
			Requirement | Type | Extension | Screed version | Position 1 pc. | for screed plate | 0.75 m | TV | left	2036690
	15AB	10 - 9999	**Requirement | Type | Extension | Screed version** 8 pc. | for tamper bar and pressure bar | | TP1; 12 pc. | for tamper bar and pressure bar | | TP2; 4 pc. | for tamper bar and pressure bar | 1.25 m | TP1; 6 pc. | for tamper bar and pressure bar | 1.25 m | TP2	2035050
			Requirement | Type | Extension | Screed version 4 pc. | for tamper bar and pressure bar | 0.75 m | TP1; 6 pc. | for tamper bar and pressure bar | 0.75 m | TP2	2035055
			Requirement | Type | Extension | Screed version | Position 1 pc. | for screed plate | | TP | Basic screed, left; 1 pc. | for screed plate | | TP | Extending screed, right; 1 pc. | for screed plate | 1.25 m | TP1 | left; 1 pc. | for screed plate | 1.25 m | TP2 | left	2035986
			Requirement | Type | Extension | Screed version | Position 1 pc. | for screed plate | | TP | Basic screed, right; 1 pc. | for screed plate | | TP | Extending screed, left; 1 pc. | for screed plate | 1.25 m | TP1 | right; 1 pc. | for screed plate | 1.25 m | TP2 | right	2035992
			Requirement | Type | Extension | Screed version | Position 1 pc. | for screed plate | 0.25 m | TP1 | right; 1 pc. | for screed plate | 0.25 m | TP2 | right	2041151
			Requirement | Type | Extension | Screed version | Position 1 pc. | for screed plate | 0.75 m | TP1 | right; 1 pc. | for screed plate | 0.75 m | TP2 | right	2036728

HEATING RODS

Series code	Serial code	Series range	Details	Part no.
AB 500-2	15AB	10 - 9999	**Requirement | Type | Extension | Screed version** 4 pc. | for tamper bar and pressure bar | 0.25 m | TP1; 6 pc. | for tamper bar and pressure bar | 0.25 m | TP2	2041147
			Requirement | Type | Extension | Screed version | Position 1 pc. | for screed plate | 0.25 m | TP1 | left; 1 pc. | for screed plate | 0.25 m | TP2 | left	2041149
			Requirement | Type | Extension | Screed version | Position 1 pc. | for screed plate | 0.75 m | TP1 | left; 1 pc. | for screed plate | 0.75 m | TP2 | left	2036690
AB 500-3	23AB	10 - 9999	**Requirement | Type | Extension | Screed version** 4 pc. | for tamper bar and pressure bar | | TV; 2 pc. | for tamper bar and pressure bar | 1.25 m | TV	2035050
			Requirement | Type | Extension | Screed version 2 pc. | for tamper bar and pressure bar | 0.75 m | TV	2035055
			Requirement | Type | Extension | Screed version | Position 1 pc. | for screed plate | | TV | Basic screed, left; 1 pc. | for screed plate | | TV | Extending screed, right; 1 pc. | for screed plate | 1.25 m | TV | left	2035986
			Requirement | Type | Extension | Screed version | Position 1 pc. | for screed plate | | TV | Basic screed, right; 1 pc. | for screed plate | | TV | Extending screed, left; 1 pc. | for screed plate | 1.25 m | TV | right	2035992
			Requirement | Type | Extension | Screed version | Position 1 pc. | for screed plate | 0.25 m | TV | right	2041151
			Requirement | Type | Extension | Screed version | Position 1 pc. | for screed plate | 0.75 m | TV | right	2036728
			Requirement | Type | Extension | Screed version 2 pc. | for tamper bar and pressure bar | 0.25 m | TV	2041147
			Requirement | Type | Extension | Screed version | Position 1 pc. | for screed plate | 0.25 m | TV | left	2041149
			Requirement | Type | Extension | Screed version | Position 1 pc. | for screed plate | 0.75 m | TV | left	2036690
	24AB	10 - 9999	**Requirement | Type | Extension | Screed version | Position** 1 pc. | for screed plate | 0.25 m | TP1 | left; 1 pc. | for screed plate | 0.25 m | TP2 | left	2041149
			Requirement | Type | Extension | Screed version | Position 1 pc. | for screed plate | 0.25 m | TP1 | right; 1 pc. | for screed plate | 0.25 m | TP2 | right	2041151
			Requirement | Type | Extension | Screed version 8 pc. | for tamper bar and pressure bar | | TP1; 12 pc. | for tamper bar and pressure bar | | TP2; 4 pc. | for tamper bar and pressure bar | 1.25 m | TP1; 6 pc. | for tamper bar and pressure bar | 1.25 m | TP2	2035050

HEATING RODS

Series code	Serial code	Series range	Details	Part no.
AB 500-3	24AB	10 - 9999	**Requirement | Type | Extension | Screed version** 4 pc. | for tamper bar and pressure bar | 0.75 m | TP1; 6 pc. | for tamper bar and pressure bar | 0.75 m | TP2	2035055
			Requirement | Type | Extension | Screed version 4 pc. | for tamper bar and pressure bar | 0.25 m | TP1; 6 pc. | for tamper bar and pressure bar | 0.25 m | TP2	2041147
			Requirement | Type | Extension | Screed version | Position 1 pc. | for screed plate | | TP | Basic screed, right; 1 pc. | for screed plate | | TP | Extending screed, left; 1 pc. | for screed plate | 1.25 m | TP1 | right; 1 pc. | for screed plate | 1.25 m | TP2 | right	2035992
			Requirement | Type | Extension | Screed version | Position 1 pc. | for screed plate | 0.75 m | TP1 | left; 1 pc. | for screed plate | 0.75 m | TP2 | left	2036690
			Requirement | Type | Extension | Screed version | Position 1 pc. | for screed plate | 0.75 m | TP1 | right; 1 pc. | for screed plate | 0.75 m | TP2 | right	2036728
			Requirement | Type | Extension | Screed version | Position 1 pc. | for screed plate | | TP | Basic screed, left; 1 pc. | for screed plate | | TP | Extending screed, right; 1 pc. | for screed plate | 1.25 m | TP1 | left; 1 pc. | for screed plate | 1.25 m | TP2 | left	2035986
AB 600	11AB	10 - 9999	**Requirement | Type | Extension | Screed version** 2 pc. | for tamper bar and pressure bar | 1.25 m | TV; 4 pc. | for tamper bar and pressure bar | 1.25 m | TP1; 6 pc. | for tamper bar and pressure bar | 1.25 m | TP2	4608150169
			Requirement | Type | Extension | Screed version 2 pc. | for screed plate | 0.75 m | TV	4608150170
			Requirement | Use | Extension | Screed version 2 pc. | Additional heating rod for increased heating power for screed extensions | 0.75 m | TV; 2 pc. | Additional heating rod for increased heating power for screed extensions | 0.75 m | TP1; 2 pc. | Additional heating rod for increased heating power for screed extensions | 0.75 m | TP2	4608150171
			Requirement | Type | Extension | Screed version 2 pc. | for screed plate | 0.75 m | TP2	4608150172
			Requirement | Type | Extension | Screed version 2 pc. | for tamper bar and pressure bar | 0.75 m | TV; 4 pc. | for tamper bar and pressure bar | 0.75 m | TP1; 6 pc. | for tamper bar and pressure bar | 0.75 m | TP2	4608150174
			Requirement | Type | Extension | Screed version 2 pc. | for tamper bar and pressure bar | 0.225 m | TV; 4 pc. | for tamper bar and pressure bar | 0.225 m | TP1; 6 pc. | for tamper bar and pressure bar | 0.225 m | TP2	4608150189

HEATING RODS

Series code	Serial code	Series range	Details	Part no.
AB 600	11AB	10 - 9999	**Requirement | Type | Extension | Screed version** 2 pc. | for screed plate | 0.75 m | TP1	4608150191
			Requirement | Use | Extension | Screed version 2 pc. | Additional heating rod for increased heating power for screed extensions | 0.75 m | TV; 2 pc. | Additional heating rod for increased heating power for screed extensions | 0.75 m | TP1; 2 pc. | Additional heating rod for increased heating power for screed extensions | 0.75 m | TP2	4608150193
			Requirement | Type | Extension | Screed version 2 pc. | for screed plate | 0.225 m | TV; 2 pc. | for screed plate | 0.225 m | TP1; 2 pc. | for screed plate | 0.225 m | TP2	4608150195
			Requirement | Type | Screed version 4 pc. | for screed plate | TV	4608150199
			Requirement | Type | Screed version 4 pc. | for screed plate | TP	4608150200
			Requirement | Type | Screed version 4 pc. | for tamper bar and pressure bar | TV; 8 pc. | for tamper bar and pressure bar | TP1; 12 pc. | for tamper bar and pressure bar | TP2	4608150202
			Requirement | Type | Extension | Screed version 2 pc. | for screed plate | 1.25 m | TV; 2 pc. | for screed plate | 1.25 m | TP1; 2 pc. | for screed plate | 1.25 m | TP2	4608150204
			Requirement | Use | Screed version 4 pc. | Additional heating rod for increased heating power for screeds | TV; 4 pc. | Additional heating rod for increased heating power for screeds | TP1; 4 pc. | Additional heating rod for increased heating power for screeds | TP2	4608150208
			Requirement | Use | Extension | Screed version 2 pc. | Additional heating rod for increased heating power for screed extensions | 1.25 m | TV; 2 pc. | Additional heating rod for increased heating power for screed extensions | 1.25 m | TP1; 2 pc. | Additional heating rod for increased heating power for screed extensions | 1.25 m | TP2	4608150209
			Requirement | Use | Screed version 4 pc. | Additional heating rod for increased heating power for screeds | TV; 4 pc. | Additional heating rod for increased heating power for screeds | TP1; 4 pc. | Additional heating rod for increased heating power for screeds | TP2	4608150210
			Requirement | Use | Extension | Screed version 2 pc. | Additional heating rod for increased heating power for screed extensions | 1.25 m | TV; 2 pc. | Additional heating rod for increased heating power for screed extensions | 1.25 m | TP1; 2 pc. | Additional heating rod for increased heating power for screed extensions | 1.25 m | TP2	4608150211
AB 600-2	16AB	10 - 9999	**Requirement | Type | Extension | Screed version** 2 pc. | for tamper bar and pressure bar | 1.25 m | TV	2035050

HEATING RODS

Series code	Serial code	Series range	Details	Part no.
AB 600-2	16AB	10 - 9999	**Requirement | Type | Extension | Screed version** 2 pc. | for tamper bar and pressure bar | 0.75 m | TV	2035055
			Requirement | Type | Extension | Screed version | Position 1 pc. | for screed plate | 1.25 m | TV | left	2035986
			Requirement | Type | Extension | Screed version | Position 1 pc. | for screed plate | 1.25 m | TV | right	2035992
			Requirement | Type | Extension | Screed version | Position 1 pc. | for screed plate | 0.75 m | TV | left	2036690
			Requirement | Type | Screed version | Position 1 pc. | for screed plate | TV | Basic screed, right; 1 pc. | for screed plate | TV | Extending screed, left	2056569
			Requirement | Type | Extension | Screed version 2 pc. | for tamper bar and pressure bar | 0.25 m | TV	2041147
			Requirement | Type | Extension | Screed version | Position 1 pc. | for screed plate | 0.25 m | TV | left	2041149
			Requirement | Type | Extension | Screed version | Position 1 pc. | for screed plate | 0.25 m | TV | right	2041151
			Requirement | Type | Screed version 4 pc. | for tamper bar and pressure bar | TV	2056558
			Requirement | Type | Screed version | Position 1 pc. | for screed plate | TV | Basic screed, left; 1 pc. | for screed plate | TV | Extending screed, right	2056568
			Requirement | Type | Extension | Screed version | Position 1 pc. | for screed plate | 0.75 m | TV | right	2036728
	17AB	10 - 9999	**Requirement | Type | Extension | Screed version** 4 pc. | for tamper bar and pressure bar | 1.25 m | TP1; 6 pc. | for tamper bar and pressure bar | 1.25 m | TP2	2035050
			Requirement | Type | Extension | Screed version 4 pc. | for tamper bar and pressure bar | 0.75 m | TP1; 6 pc. | for tamper bar and pressure bar | 0.75 m | TP2	2035055
			Requirement | Type | Extension | Screed version | Position 1 pc. | for screed plate | 1.25 m | TP1 | left; 1 pc. | for screed plate | 1.25 m | TP2 | left	2035986
			Requirement | Type | Extension | Screed version | Position 1 pc. | for screed plate | 1.25 m | TP1 | right; 1 pc. | for screed plate | 1.25 m | TP2 | right	2035992
			Requirement | Type | Extension | Screed version | Position 1 pc. | for screed plate | 0.75 m | TP1 | left; 1 pc. | for screed plate | 0.75 m | TP2 | left	2036690
			Requirement | Type | Screed version | Position 1 pc. | for screed plate | TP | Basic screed, right; 1 pc. | for screed plate | TP | Extending screed, left	2056569

HEATING RODS

Series code	Serial code	Series range	Details	Part no.
AB 600-2	17AB	10 - 9999	**Requirement | Type | Extension | Screed version** 4 pc. | for tamper bar and pressure bar | 0.25 m | TP1; 6 pc. | for tamper bar and pressure bar | 0.25 m | TP2	2041147
			Requirement | Type | Extension | Screed version | Position 1 pc. | for screed plate | 0.25 m | TP1 | left; 1 pc. | for screed plate | 0.25 m | TP2 | left	2041149
			Requirement | Type | Extension | Screed version | Position 1 pc. | for screed plate | 0.25 m | TP1 | right; 1 pc. | for screed plate | 0.25 m | TP2 | right	2041151
			Requirement | Type | Screed version 8 pc. | for tamper bar and pressure bar | TP1; 12 pc. | for tamper bar and pressure bar | TP2	2056558
			Requirement | Type | Screed version | Position 1 pc. | for screed plate | TP | Basic screed, left; 1 pc. | for screed plate | TP | Extending screed, right	2056568
			Requirement | Type | Extension | Screed version | Position 1 pc. | for screed plate | 0.75 m | TP1 | right; 1 pc. | for screed plate | 0.75 m | TP2 | right	2036728
AB 600-3	25AB	10 - 9999	**Requirement | Type | Extension | Screed version** 2 pc. | for tamper bar and pressure bar | 1.25 m | TV	2035050
			Requirement | Type | Extension | Screed version 2 pc. | for tamper bar and pressure bar | 0.75 m | TV	2035055
			Requirement | Type | Extension | Screed version | Position 1 pc. | for screed plate | 1.25 m | TV | left	2035986
			Requirement | Type | Extension | Screed version | Position 1 pc. | for screed plate | 1.25 m | TV | right	2035992
			Requirement | Type | Extension | Screed version | Position 1 pc. | for screed plate | 0.75 m | TV | left	2036690
			Requirement | Type | Screed version | Position 1 pc. | for screed plate | TV | Basic screed, right; 1 pc. | for screed plate | TV | Extending screed, left	2056569
			Requirement | Type | Extension | Screed version 2 pc. | for tamper bar and pressure bar | 0.25 m | TV	2041147
			Requirement | Type | Extension | Screed version | Position 1 pc. | for screed plate | 0.25 m | TV | left	2041149
			Requirement | Type | Extension | Screed version | Position 1 pc. | for screed plate | 0.25 m | TV | right	2041151
			Requirement | Type | Screed version 4 pc. | for tamper bar and pressure bar | TV	2056558
			Requirement | Type | Screed version | Position 1 pc. | for screed plate | TV | Basic screed, left; 1 pc. | for screed plate | TV | Extending screed, right	2056568
			Requirement | Type | Extension | Screed version | Position 1 pc. | for screed plate | 0.75 m | TV | right	2036728

HEATING RODS

Series code	Serial code	Series range	Details	Part no.
AB 600-3	26AB	10 - 9999	**Requirement | Type | Screed version** 8 pc. | for tamper bar and pressure bar | TP1; 12 pc. | for tamper bar and pressure bar | TP2	2056558
			Requirement | Type | Screed version | Position 1 pc. | for screed plate | TP | Basic screed, left; 1 pc. | for screed plate | TP | Extending screed, right	2056568
			Requirement | Type | Screed version | Position 1 pc. | for screed plate | TP | Basic screed, right; 1 pc. | for screed plate | TP | Extending screed, left	2056569
			Requirement | Type | Extension | Screed version 4 pc. | for tamper bar and pressure bar | 1.25 m | TP1; 6 pc. | for tamper bar and pressure bar | 1.25 m | TP2	2035050
			Requirement | Type | Extension | Screed version 4 pc. | for tamper bar and pressure bar | 0.75 m | TP1; 6 pc. | for tamper bar and pressure bar | 0.75 m | TP2	2035055
			Requirement | Type | Extension | Screed version | Position 1 pc. | for screed plate | 0.25 m | TP1 | right; 1 pc. | for screed plate | 0.25 m | TP2 | right	2041151
			Requirement | Type | Extension | Screed version | Position 1 pc. | for screed plate | 1.25 m | TP1 | right; 1 pc. | for screed plate | 1.25 m | TP2 | right	2035992
			Requirement | Type | Extension | Screed version | Position 1 pc. | for screed plate | 0.75 m | TP1 | left; 1 pc. | for screed plate | 0.75 m | TP2 | left	2036690
			Requirement | Type | Extension | Screed version | Position 1 pc. | for screed plate | 0.75 m | TP1 | right; 1 pc. | for screed plate | 0.75 m | TP2 | right	2036728
			Requirement | Type | Extension | Screed version 4 pc. | for tamper bar and pressure bar | 0.25 m | TP1; 6 pc. | for tamper bar and pressure bar | 0.25 m | TP2	2041147
			Requirement | Type | Extension | Screed version | Position 1 pc. | for screed plate | 0.25 m | TP1 | left; 1 pc. | for screed plate | 0.25 m | TP2 | left	2041149
			Requirement | Type | Extension | Screed version | Position 1 pc. | for screed plate | 1.25 m | TP1 | left; 1 pc. | for screed plate | 1.25 m | TP2 | left	2035986
VF 500-2	19AB	10 - 9999	**Requirement | Type | Extension | Berm | Screed version | Position** 1 pc. | for screed plate | | 305 mm berm | V | Extending screed, left; 1 pc. | for screed plate | | 305 mm berm | V | Extending screed, right; 2 pc. | for screed plate | 0.305 m | | V	2137037

HEATING RODS

Series code	Serial code	Series range	Details	Part no.
VF 500-2	19AB	10 - 9999	**Requirement | Type | Screed version | Position** 2 pc. | for screed plate | V | Basic screen, left + right	2276013
			Requirement | Type | Berm | Screed version | Position 1 pc. | for screed plate | 457 mm berm | V | Extending screed, left; 1 pc. | for screed plate | 457 mm berm | V | Extending screed, right	2137039
			Requirement | Type | Berm | Screed version | Position 1 pc. | for screed plate | 305 mm berm | V | Extending screed, right	2137041
			Requirement | Type | Extension | Berm | Screed version | Position 1 pc. | for screed plate | 0.61 m | 610 mm berm | V | Extending screed, left; 1 pc. | for screed plate | 0.61 m | 610 mm berm | V | Extending screed, right; 2 pc. | for tamper bar and pressure bar | 0.61 m | | V	2137042
			Requirement | Type | Berm | Screed version | Position 1 pc. | for screed plate | 305 mm berm | V | Extending screed, left; 1 pc. | for screed plate | 305 mm berm | V | Extending screed, right	2137043
			Requirement | Type | Extension | Berm | Screed version | Position 1 pc. | for screed plate | 0.305 m | 305 mm berm | V | Extending screed, left; 1 pc. | for screed plate | 0.305 m | 305 mm berm | V | Extending screed, right; 2 pc. | for tamper bar and pressure bar | 0.305 m | | V	2137044
			Requirement | Type | Extension | Berm | Screed version | Position 1 pc. | for screed plate | 0.61 m | 610 mm berm | V | Extending screed, left; 1 pc. | for screed plate | 0.61 m | 610 mm berm | V | Extending screed, right; 2 pc. | for screed plate | 0.61 m | | V	2137046
			Requirement | Type | Berm | Screed version | Position 1 pc. | for screed plate | 457 mm berm | V | Extending screed, left; 1 pc. | for screed plate | 457 mm berm | V | Extending screed, right	2137048
			Requirement | Type | Berm | Screed version | Position 1 pc. | for screed plate | 305 mm berm | V | Extending screed, left	2141834
			Requirement | Type | Berm | Screed version | Position 2 pc. | for screed plate | no berm | V | Extending screed, left + right	2182409
			Requirement | Type | Screed version | Position 2 pc. | for screed plate | V | Basic screen, left + right	2190087
			Requirement | Type | Screed version | Position 2 pc. | for screed plate | V | Basic screen, left + right	2190671
			Requirement | Type | Berm | Screed version | Position 1 pc. | for screed plate | 457 mm berm | V | Extending screed, left; 1 pc. | for screed plate | 457 mm berm | V | Extending screed, right	2191048
			Requirement | Type | Berm | Screed version | Position 1 pc. | for screed plate | 457 mm berm | V | Extending screed, right	2191058
			Requirement | Type | Berm | Screed version | Position 1 pc. | for screed plate | 457 mm berm | V | Extending screed, left	2191782
			Requirement | Type | Berm | Screed version | Position 1 pc. | for screed plate | 610 mm berm | V | Extending screed, right	2192596
			Requirement | Type | Berm | Screed version | Position 1 pc. | for screed plate | 610 mm berm | V | Extending screed, left; 1 pc. | for screed plate | 610 mm berm | V | Extending screed, right	2193930

HEATING RODS

Series code	Serial code	Series range	Details	Part no.
VF 500-2	19AB	10 - 9999	**Requirement | Type | Berm | Screed version | Position** 1 pc. | for screed plate | 610 mm berm | V | Extending screed, left	2194547
			Requirement | Type | Berm | Screed version | Position 2 pc. | for screed plate | no berm | V | Extending screed, left + right	2137038
VF 600-2	20AB	10 - 9999	**Requirement | Type | Screed version | Position** 2 pc. | for screed plate | V | Basic screen, left + right	2137029
			Requirement | Type | Berm | Screed version | Position 2 pc. | for screed plate | no berm | V | Extending screed, left + right	2169384
			Requirement | Type | Screed version | Position 2 pc. | for screed plate | V | Basic screen, left + right	2137032
			Requirement | Type | Extension | Berm | Screed version | Position 1 pc. | for screed plate | 0.305 m | 305 mm berm | V | Extending screed, left; 1 pc. | for screed plate | 0.305 m | 305 mm berm | V | Extending screed, right; 2 pc. | for screed plate | 0.305 m | | V	2137037
			Requirement | Type | Berm | Screed version | Position 1 pc. | for screed plate | 305 mm berm | V | Extending screed, left; 1 pc. | for screed plate | 305 mm berm | V | Extending screed, right	2137038
			Requirement | Type | Berm | Screed version | Position 1 pc. | for screed plate | 457 mm berm | V | Extending screed, left; 1 pc. | for screed plate | 457 mm berm | V | Extending screed, right	2137039
			Requirement | Type | Berm | Screed version | Position 1 pc. | for screed plate | 457 mm berm | V | Extending screed, left; 1 pc. | for screed plate | 457 mm berm | V | Extending screed, right	2137040
			Requirement | Type | Berm | Screed version | Position 1 pc. | for screed plate | 610 mm berm | V | Extending screed, right	2137041
			Requirement | Type | Extension | Berm | Screed version | Position 1 pc. | for screed plate | 0.61 m | 610 mm berm | V | Extending screed, left; 1 pc. | for screed plate | 0.61 m | 610 mm berm | V | Extending screed, right; 2 pc. | for tamper bar and pressure bar | 0.61 m | | V	2137042
			Requirement | Type | Berm | Screed version | Position 1 pc. | for screed plate | 610 mm berm | V | Extending screed, left; 1 pc. | for screed plate | 610 mm berm | V | Extending screed, right	2137043
			Requirement | Type | Extension | Berm | Screed version | Position 1 pc. | for screed plate | 0.305 m | 305 mm berm | V | Extending screed, left; 1 pc. | for screed plate | 0.305 m | 305 mm berm | V | Extending screed, right; 2 pc. | for tamper bar and pressure bar | 0.305 m | | V	2137044
			Requirement | Type | Berm | Screed version | Position 1 pc. | for screed plate | 305 mm berm | V | Extending screed, right	2137045
			Requirement | Type | Extension | Berm | Screed version | Position 1 pc. | for screed plate | 0.61 m | 610 mm berm | V | Extending screed, left; 1 pc. | for screed plate | 0.61 m | 610 mm berm | V | Extending screed, right; 2 pc. | for screed plate | 0.61 m | | V	2137046

HEATING RODS

Series code	Serial code	Series range	Details	Part no.
VF 600-2	20AB	10 - 9999	**Requirement | Type | Berm | Screed version | Position** 1 pc. | for screed plate | 457 mm berm | V | Extending screed, left; 1 pc. | for screed plate | 457 mm berm | V | Extending screed, right	2137048
			Requirement | Type | Berm | Screed version | Position 2 pc. | for screed plate | no berm | V | Extending screed, left + right	2138475
			Requirement | Type | Berm | Screed version | Position 1 pc. | for screed plate | 457 mm berm | V | Extending screed, left	2141794
			Requirement | Type | Berm | Screed version | Position 1 pc. | for screed plate | 305 mm berm | V | Extending screed, left	2141819
			Requirement | Type | Berm | Screed version | Position 1 pc. | for screed plate | 610 mm berm | V | Extending screed, left	2141834
			Requirement | Type | Berm | Screed version | Position 1 pc. | for screed plate | 457 mm berm | V | Extending screed, right	2147047
			Requirement | Type | Screed version | Position 2 pc. | for screed plate | V | Basic screen, left + right	2137031
VR 600-2	18AB	10 - 9999	**Requirement | Type | Screed version** 4 pc. | for screed plate | V	2096490
			Requirement | Type | Screed version | Position 2 pc. | for screed plate | V | Extending screed, left + right	2112914
			Requirement | Type | Extension | Screed version | Position 1 pc. | for screed plate | 0.65 m | V | right	2126439
			Requirement | Type | Extension | Screed version | Position 1 pc. | for screed plate | 0.65 m | V | left	2123603
			Requirement | Type | Extension | Screed version 2 pc. | for tamper bar and pressure bar | 0.65 m | V	2123611
			Requirement | Type | Screed version | Position 2 pc. | for screed plate | V | Basic screen, left + right	2119873
SB 250	02SB	10 - 9999	**Requirement | Use | Screed version** 2 pc. | Additional heating rod for increased heating power for screeds | TV; 2 pc. | Additional heating rod for increased heating power for screeds | TP1; 2 pc. | Additional heating rod for increased heating power for screeds | TP2	2053770
			Requirement | Type | Use | Extension | Screed version 4 pc. | for screed plate | | 1.5 m | TV; 4 pc. | for screed plate | | 1.5 m | TP1; 4 pc. | for screed plate | | 1.5 m | TP2; 2 pc. | | Additional heating rod for increased heating power for screed extensions | 1.5 m | TV; 2 pc. | | Additional heating rod for increased heating power for screed extensions | 1.5 m | TP1; 2 pc. | | Additional heating rod for increased heating power for screed extensions | 1.5 m | TP2	4608150003
			Requirement | Type | Screed version 4 pc. | for screed plate | TV; 4 pc. | for screed plate | TP1; 4 pc. | for screed plate | TP2	4608150006

HEATING RODS

Series code	Serial code	Series range	Details	Part no.
SB 250	02SB	10 - 9999	**Requirement | Type | Use | Extension | Screed version** 4 pc. | for screed plate | | 1.0 m | TV; 4 pc. | for screed plate | | 1.0 m | TP1; 4 pc. | for screed plate | | 1.0 m | TP2; 2 pc. | | Additional heating rod for increased heating power for screed extensions | 1.0 m | TV; 2 pc. | | Additional heating rod for increased heating power for screed extensions | 1.0 m | TP1; 2 pc. | | Additional heating rod for increased heating power for screed extensions | 1.0 m | TP2	4608150037
			Requirement | Type | Use | Extension | Screed version 4 pc. | for screed plate | | 0.5 m | TV; 4 pc. | for screed plate | | 0.5 m | TP1; 4 pc. | for screed plate | | 0.5 m | TP2; 2 pc. | | Additional heating rod for increased heating power for screed extensions | 0.5 m | TV; 2 pc. | | Additional heating rod for increased heating power for screed extensions | 0.5 m | TP1; 2 pc. | | Additional heating rod for increased heating power for screed extensions | 0.5 m | TP2	4608150071
			Requirement | Type | Extension | Screed version 2 pc. | for tamper bar and pressure bar | 0.25 m | TV; 4 pc. | for tamper bar and pressure bar | 0.25 m | TP1; 6 pc. | for tamper bar and pressure bar | 0.25 m | TP2	4608150189
			Requirement | Type | Extension | Screed version 2 pc. | for tamper bar and pressure bar | 0.5 m | TV; 4 pc. | for tamper bar and pressure bar | 0.5 m | TP1; 6 pc. | for tamper bar and pressure bar | 0.5 m | TP2	4608150105
			Requirement | Type | Use | Extension | Screed version 4 pc. | for screed plate | | 0.25 m | TV; 4 pc. | for screed plate | | 0.25 m | TP1; 4 pc. | for screed plate | | 0.25 m | TP2; 2 pc. | | Additional heating rod for increased heating power for screed extensions | 0.25 m | TV; 2 pc. | | Additional heating rod for increased heating power for screed extensions | 0.25 m | TP1; 2 pc. | | Additional heating rod for increased heating power for screed extensions | 0.25 m | TP2	4608150115
			Requirement | Type | Use | Extension | Version | Screed version 4 pc. | for screed plate | | 0.75 m | telescoping | TV; 4 pc. | for screed plate | | 0.75 m | telescoping | TP1; 4 pc. | for screed plate | | 0.75 m | telescoping | TP2; 2 pc. | | Additional heating rod for increased heating power for screed extensions | 0.75 m | telescoping | TV; 2 pc. | | Additional heating rod for increased heating power for screed extensions | 0.75 m | telescoping | TP1; 2 pc. | | Additional heating rod for increased heating power for screed extensions | 0.75 m | telescoping | TP2	4608150116
			Requirement | Type | Screed version 2 pc. | for tamper bar and pressure bar | TV; 4 pc. | for tamper bar and pressure bar | TP1; 6 pc. | for tamper bar and pressure bar | TP2	4608150168

HEATING RODS

Series code	Serial code	Series range	Details	Part no.
SB 250	02SB	10 - 9999	**Requirement | Type | Extension | Version | Screed version** 2 pc. | for tamper bar and pressure bar | 0.75 m | telescoping | TV; 2 pc. | for tamper bar and pressure bar | 1.0 m | | TV; 4 pc. | for tamper bar and pressure bar | 0.75 m | telescoping | TP1; 4 pc. | for tamper bar and pressure bar | 1.0 m | | TP1; 6 pc. | for tamper bar and pressure bar | 0.75 m | telescoping | TP2; 6 pc. | for tamper bar and pressure bar | 1.0 m | | TP2	4608150184
			Requirement | Type | Extension | Screed version 2 pc. | for tamper bar and pressure bar | 1.5 m | TV; 4 pc. | for tamper bar and pressure bar | 1.5 m | TP1; 6 pc. | for tamper bar and pressure bar | 1.5 m | TP2	4608150100
SB 250-2	05SB	10 - 9999	**Requirement | Type | Extension | Screed version | Position** 2 pc. | for screed plate | 1.0 m | TV | left; 2 pc. | for screed plate | 1.0 m | TP1 | left; 2 pc. | for screed plate | 1.0 m | TP2 | left	2119791
			Requirement | Type | Extension | Screed version 2 pc. | for tamper bar and pressure bar | 0.25 m | TV; 4 pc. | for tamper bar and pressure bar | 0.25 m | TP1; 6 pc. | for tamper bar and pressure bar | 0.25 m | TP2	4608150189
			Requirement | Type | Screed version | Position 2 pc. | for screed plate | TV | Basic screen, left + right; 2 pc. | for screed plate | TP1 | Basic screen, left + right; 2 pc. | for screed plate | TP2 | Basic screen, left + right	2121664
			Requirement | Type | Screed version | Position 2 pc. | for screed plate | TV | Basic screen, left + right; 2 pc. | for screed plate | TP1 | Basic screen, left + right; 2 pc. | for screed plate | TP2 | Basic screen, left + right	2121669
			Requirement | Type | Extension | Version | Screed version | Position 1 pc. | for screed plate | 0.75 m | telescoping | TV | left; 1 pc. | for screed plate | 0.75 m | telescoping | TP1 | left; 1 pc. | for screed plate | 0.75 m | telescoping | TP2 | left	2121689
			Requirement | Type | Extension | Version | Screed version | Position 1 pc. | for screed plate | 0.75 m | telescoping | TV | right; 1 pc. | for screed plate | 0.75 m | telescoping | TP1 | right; 1 pc. | for screed plate | 0.75 m | telescoping | TP2 | right	2121757
			Requirement | Type | Extension | Screed version | Position 2 pc. | for screed plate | 0.5 m | TV | left; 2 pc. | for screed plate | 0.5 m | TP1 | left; 2 pc. | for screed plate | 0.5 m | TP2 | left	2121768
			Requirement | Type | Extension | Screed version | Position 2 pc. | for screed plate | 0.5 m | TV | right; 2 pc. | for screed plate | 0.5 m | TP1 | right; 2 pc. | for screed plate | 0.5 m | TP2 | right	2121859
			Requirement | Type | Extension | Screed version | Position 1 pc. | for screed plate | 0.25 m | TV | left; 1 pc. | for screed plate | 0.25 m | TP1 | left; 1 pc. | for screed plate | 0.25 m | TP2 | left	2122379
			Requirement | Type | Extension | Screed version | Position 1 pc. | for screed plate | 0.25 m | TV | right; 1 pc. | for screed plate | 0.25 m | TP1 | right; 1 pc. | for screed plate | 0.25 m | TP2 | right	2122384

HEATING RODS				
Series code	Serial code	Series range	Details	Part no.
SB 250-2	05SB	10 - 9999	**Requirement | Type | Extension | Screed version | Position** 2 pc. | for screed plate | 1.5 m | TV | left; 2 pc. | for screed plate | 1.5 m | TP1 | left; 2 pc. | for screed plate | 1.5 m | TP2 | left	2148138
			Requirement | Type | Extension | Screed version | Position 2 pc. | for screed plate | 1.5 m | TV | right; 2 pc. | for screed plate | 1.5 m | TP1 | right; 2 pc. | for screed plate | 1.5 m | TP2 | right	2148151
			Requirement | Type | Extension | Screed version 2 pc. | for tamper bar and pressure bar | 1.5 m | TV; 4 pc. | for tamper bar and pressure bar | 1.5 m | TP1; 6 pc. | for tamper bar and pressure bar | 1.5 m | TP2	4608150100
			Requirement | Type | Extension | Screed version 2 pc. | for tamper bar and pressure bar | 0.5 m | TV; 4 pc. | for tamper bar and pressure bar | 0.5 m | TP1; 6 pc. | for tamper bar and pressure bar | 0.5 m | TP2	4608150105
			Requirement | Type | Screed version 2 pc. | for tamper bar and pressure bar | TV; 4 pc. | for tamper bar and pressure bar | TP1; 6 pc. | for tamper bar and pressure bar | TP2	4608150168
			Requirement | Type | Extension | Version | Screed version 2 pc. | for tamper bar and pressure bar | 0.75 m | telescoping | TV; 2 pc. | for tamper bar and pressure bar | 1.0 m | | TV; 4 pc. | for tamper bar and pressure bar | 0.75 m | telescoping | TP1; 4 pc. | for tamper bar and pressure bar | 1.0 m | | TP1; 6 pc. | for tamper bar and pressure bar | 0.75 m | telescoping | TP2; 6 pc. | for tamper bar and pressure bar | 1.0 m | | TP2	4608150184
			Requirement | Type | Extension | Screed version | Position 2 pc. | for screed plate | 1.0 m | TV | right; 2 pc. | for screed plate | 1.0 m | TP1 | right; 2 pc. | for screed plate | 1.0 m | TP2 | right	2119815
SB 300	03SB	10 - 9999	**Requirement | Use | Screed version** 2 pc. | Additional heating rod for increased heating power for screeds | TV; 2 pc. | Additional heating rod for increased heating power for screeds | TP1; 2 pc. | Additional heating rod for increased heating power for screeds | TP2	2053768
			Requirement | Type | Use | Extension | Screed version 4 pc. | for screed plate | | | TV; 4 pc. | for screed plate | | 1.5 m | TV; 4 pc. | for screed plate | | | TP1; 4 pc. | for screed plate | | 1.5 m | TP1; 4 pc. | for screed plate | | | TP2; 4 pc. | for screed plate | | 1.5 m | TP2; 2 pc. | | Additional heating rod for increased heating power for screed extensions | 1.5 m | TV; 2 pc. | | Additional heating rod for increased heating power for screed extensions | 1.5 m | TP1; 2 pc. | | Additional heating rod for increased heating power for screed extensions | 1.5 m | TP2	4608150003

HEATING RODS

Series code	Serial code	Series range	Details	Part no.
SB 300	03SB	10 - 9999	**Requirement | Type | Use | Extension | Screed version** 4 pc. | for screed plate | | 1.0 m | TV; 4 pc. | for screed plate | | 1.0 m | TP1; 4 pc. | for screed plate | | 1.0 m | TP2; 2 pc. | | Additional heating rod for increased heating power for screed extensions | 1.0 m | TV; 2 pc. | | Additional heating rod for increased heating power for screed extensions | 1.0 m | TP1; 2 pc. | | Additional heating rod for increased heating power for screed extensions | 1.0 m | TP2	4608150037
			Requirement | Type | Use | Extension | Screed version 4 pc. | for screed plate | | 0.5 m | TV; 4 pc. | for screed plate | | 0.5 m | TP1; 4 pc. | for screed plate | | 0.5 m | TP2; 2 pc. | | Additional heating rod for increased heating power for screed extensions | 0.5 m | TV; 2 pc. | | Additional heating rod for increased heating power for screed extensions | 0.5 m | TP1; 2 pc. | | Additional heating rod for increased heating power for screed extensions | 0.5 m | TP2	4608150071
			Requirement | Type | Extension | Screed version 2 pc. | for tamper bar and pressure bar | 0.25 m | TV; 4 pc. | for tamper bar and pressure bar | 0.25 m | TP1; 6 pc. | for tamper bar and pressure bar | 0.25 m | TP2	4608150189
			Requirement | Type | Extension | Screed version 2 pc. | for tamper bar and pressure bar | 0.5 m | TV; 4 pc. | for tamper bar and pressure bar | 0.5 m | TP1; 6 pc. | for tamper bar and pressure bar | 0.5 m | TP2	4608150105
			Requirement | Type | Use | Extension | Screed version 4 pc. | for screed plate | | 0.25 m | TV; 4 pc. | for screed plate | | 0.25 m | TP1; 4 pc. | for screed plate | | 0.25 m | TP2; 2 pc. | | Additional heating rod for increased heating power for screed extensions | 0.25 m | TV; 2 pc. | | Additional heating rod for increased heating power for screed extensions | 0.25 m | TP1; 2 pc. | | Additional heating rod for increased heating power for screed extensions | 0.25 m | TP2	4608150115
			Requirement | Type | Use | Extension | Version | Screed version 4 pc. | for screed plate | | 0.75 m | telescoping | TV; 4 pc. | for screed plate | | 0.75 m | telescoping | TP1; 4 pc. | for screed plate | | 0.75 m | telescoping | TP2; 2 pc. | | Additional heating rod for increased heating power for screed extensions | 0.75 m | telescoping | TV; 2 pc. | | Additional heating rod for increased heating power for screed extensions | 0.75 m | telescoping | TP1; 2 pc. | | Additional heating rod for increased heating power for screed extensions | 0.75 m | telescoping | TP2	4608150116

HEATING RODS

Series code	Serial code	Series range	Details	Part no.
SB 300	03SB	10 - 9999	**Requirement | Type | Extension | Version | Screed version** 2 pc. | for tamper bar and pressure bar | 0.75 m | telescoping | TV; 2 pc. | for tamper bar and pressure bar | 1.0 m | | TV; 4 pc. | for tamper bar and pressure bar | 0.75 m | telescoping | TP1; 4 pc. | for tamper bar and pressure bar | 1.0 m | | TP1; 6 pc. | for tamper bar and pressure bar | 0.75 m | telescoping | TP2; 6 pc. | for tamper bar and pressure bar | 1.0 m | | TP2	4608150184
			Requirement | Type | Extension | Screed version 2 pc. | for tamper bar and pressure bar | | TV; 2 pc. | for tamper bar and pressure bar | 1.5 m | TV; 4 pc. | for tamper bar and pressure bar | | TP1; 4 pc. | for tamper bar and pressure bar | 1.5 m | TP1; 6 pc. | for tamper bar and pressure bar | | TP2; 6 pc. | for tamper bar and pressure bar | 1.5 m | TP2	4608150100
SB 300-2	06SB	10 - 9999	**Requirement | Type | Screed version | Position** 2 pc. | for screed plate | TV | Basic screen, left + right; 2 pc. | for screed plate | TP1 | Basic screen, left + right; 2 pc. | for screed plate | TP2 | Basic screen, left + right	2119621
			Requirement | Type | Extension | Screed version 2 pc. | for tamper bar and pressure bar | 0.25 m | TV; 4 pc. | for tamper bar and pressure bar | 0.25 m | TP1; 6 pc. | for tamper bar and pressure bar | 0.25 m | TP2	4608150189
			Requirement | Type | Extension | Screed version | Position 2 pc. | for screed plate | 1.0 m | TV | left; 2 pc. | for screed plate | 1.0 m | TP1 | left; 2 pc. | for screed plate | 1.0 m | TP2 | left	2119791
			Requirement | Type | Extension | Screed version | Position 2 pc. | for screed plate | 1.0 m | TV | right; 2 pc. | for screed plate | 1.0 m | TP1 | right; 2 pc. | for screed plate | 1.0 m | TP2 | right	2119815
			Requirement | Type | Extension | Version | Screed version | Position 1 pc. | for screed plate | 0.75 m | telescoping | TV | left; 1 pc. | for screed plate | 0.75 m | telescoping | TP1 | left; 1 pc. | for screed plate | 0.75 m | telescoping | TP2 | left	2121689
			Requirement | Type | Extension | Version | Screed version | Position 1 pc. | for screed plate | 0.75 m | telescoping | TV | right; 1 pc. | for screed plate | 0.75 m | telescoping | TP1 | right; 1 pc. | for screed plate | 0.75 m | telescoping | TP2 | right	2121757
			Requirement | Type | Extension | Screed version | Position 2 pc. | for screed plate | 0.5 m | TV | left; 2 pc. | for screed plate | 0.5 m | TP1 | left; 2 pc. | for screed plate | 0.5 m | TP2 | left	2121768
			Requirement | Type | Extension | Screed version | Position 2 pc. | for screed plate | 0.5 m | TV | right; 2 pc. | for screed plate | 0.5 m | TP1 | right; 2 pc. | for screed plate | 0.5 m | TP2 | right	2121859
			Requirement | Type | Extension | Screed version | Position 1 pc. | for screed plate | 0.25 m | TV | left; 1 pc. | for screed plate | 0.25 m | TP1 | left; 1 pc. | for screed plate | 0.25 m | TP2 | left	2122379

HEATING RODS

Series code	Serial code	Series range	Details	Part no.
SB 300-2	06SB	10 - 9999	**Requirement | Type | Extension | Screed version | Position** 1 pc. | for screed plate | 0.25 m | TV | right; 1 pc. | for screed plate | 0.25 m | TP1 | right; 1 pc. | for screed plate | 0.25 m | TP2 | right	2122384
			Requirement | Type | Extension | Screed version | Position 2 pc. | for screed plate | 1.5 m | TV | left; 2 pc. | for screed plate | 1.5 m | TP1 | left; 2 pc. | for screed plate | 1.5 m | TP2 | left	2148138
			Requirement | Type | Extension | Screed version | Position 2 pc. | for screed plate | 1.5 m | TV | right; 2 pc. | for screed plate | 1.5 m | TP1 | right; 2 pc. | for screed plate | 1.5 m | TP2 | right	2148151
			Requirement | Type | Extension | Screed version 2 pc. | for tamper bar and pressure bar | | TV; 2 pc. | for tamper bar and pressure bar | 1.5 m | TV; 4 pc. | for tamper bar and pressure bar | | TP1; 4 pc. | for tamper bar and pressure bar | 1.5 m | TP1; 6 pc. | for tamper bar and pressure bar | | TP2; 6 pc. | for tamper bar and pressure bar | 1.5 m | TP2	4608150100
			Requirement | Type | Extension | Screed version 2 pc. | for tamper bar and pressure bar | 0.5 m | TV; 4 pc. | for tamper bar and pressure bar | 0.5 m | TP1; 6 pc. | for tamper bar and pressure bar | 0.5 m | TP2	4608150105
			Requirement | Type | Extension | Version | Screed version 2 pc. | for tamper bar and pressure bar | 0.75 m | telescoping | TV; 2 pc. | for tamper bar and pressure bar | 1.0 m | | TV; 4 pc. | for tamper bar and pressure bar | 0.75 m | telescoping | TP1; 4 pc. | for tamper bar and pressure bar | 1.0 m | | TP1; 6 pc. | for tamper bar and pressure bar | 0.75 m | telescoping | TP2; 6 pc. | for tamper bar and pressure bar | 1.0 m | | TP2	4608150184
			Requirement | Type | Screed version | Position 2 pc. | for screed plate | TV | Basic screen, left + right; 2 pc. | for screed plate | TP1 | Basic screen, left + right; 2 pc. | for screed plate | TP2 | Basic screen, left + right	2119711

V-BELTS

VÖGELE V-belts are used to drive the generator.

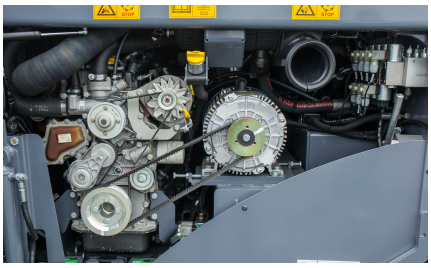

V-BELTS							
Series code	Serial code	Series range	Part	Version	Power	Require-ment	Part no.
SUPER 700	0790	10 - 1438	V-belt		5 kW at idle/8.5 kW at full speed	1 pc.	2034422
			V-belt pulley		5 kW at idle/8.5 kW at full speed		2024975
		1439 - 9999	Drive belt		5 kW at idle/8.5 kW at full speed	1 pc.	2182686
			V-belt pulley		5 kW at idle/8.5 kW at full speed		2055082
SUPER 700-3	0890	10 - 9999	Drive belt		5 kW at idle/8.5 kW at full speed	1 pc.	2425925
			V-belt pulley		5 kW at idle/8.5 kW at full speed		2338658
SUPER 700-3i	0890	10 - 9999	Drive belt		5 kW at idle/8.5 kW at full speed	1 pc.	2425925
			V-belt pulley		5 kW at idle/8.5 kW at full speed		2338658
SUPER 800	0790	10 - 1438	V-belt		5 kW at idle/8.5 kW at full speed	1 pc.	2034422
			V-belt pulley		5 kW at idle/8.5 kW at full speed		2024975
		1439 - 9999	Drive belt		5 kW at idle/8.5 kW at full speed	1 pc.	2182686
			V-belt pulley		5 kW at idle/8.5 kW at full speed		2055082
SUPER 800-3	0890	10 - 9999	Drive belt		5 kW at idle/8.5 kW at full speed	1 pc.	2425925
			V-belt pulley		5 kW at idle/8.5 kW at full speed		2338658
SUPER 800-3i	0890	10 - 9999	Drive belt		5 kW at idle/8.5 kW at full speed	1 pc.	2425925
			V-belt pulley		5 kW at idle/8.5 kW at full speed		2338658
SUPER 700	0990	10 - 9999	Drive belt		5 kW at idle/8.5 kW at full speed	1 pc.	2425925
			V-belt pulley		5 kW at idle/8.5 kW at full speed		2338658
SUPER 800	0990	10 - 9999	Drive belt		5 kW at idle/8.5 kW at full speed	1 pc.	2425925
			V-belt pulley		5 kW at idle/8.5 kW at full speed		2338658

V-BELTS

Series code	Serial code	Series range	Part	Version	Power	Require-ment	Part no.
SUPER 700i	0990	10 - 9999	Drive belt		5 kW at idle/8.5 kW at full speed	1 pc.	2425925
			V-belt pulley		5 kW at idle/8.5 kW at full speed		2338658
SUPER 800i	0990	10 - 9999	Drive belt		5 kW at idle/8.5 kW at full speed	1 pc.	2425925
			V-belt pulley		5 kW at idle/8.5 kW at full speed		2338658
SUPER 1100-2	0811	10 - 9999	V-belt		7 kW at idle/13 kW at full speed	2 pc.	2048342
			V-belt pulley		7 kW at idle/13 kW at full speed		2044085
SUPER 1100-3	1011	10 - 9999	V-belt		10 kW at idle/13 kW at full speed	2 pc.	2244137
			V-belt pulley		10 kW at idle/13 kW at full speed		2236103
	1411	10 - 9999	V-belt		10 kW at idle/13 kW at full speed	1 pc.	2530764
			V-belt pulley		10 kW at idle/13 kW at full speed		2518341
SUPER 1100-3i	1011	10 - 9999	V-belt		10 kW at idle/13 kW at full speed	2 pc.	2244137
			V-belt pulley		10 kW at idle/13 kW at full speed		2236103
	1411	10 - 9999	V-belt		10 kW at idle/13 kW at full speed	1 pc.	2530764
			V-belt pulley		10 kW at idle/13 kW at full speed		2518341
SUPER 1103-2	0911	10 - 9999	V-belt		7 kW at idle/13 kW at full speed	2 pc.	2048342
			V-belt pulley		7 kW at idle/13 kW at full speed		2044085
SUPER 1103-3	1111	10 - 9999	V-belt		10 kW at idle/13 kW at full speed	2 pc.	2244137
			V-belt pulley		10 kW at idle/13 kW at full speed		2236103
	1511	10 - 9999	V-belt		10 kW at idle/13 kW at full speed	1 pc.	2530764
			V-belt pulley		10 kW at idle/13 kW at full speed		2518341
SUPER 1103-3i	1111	10 - 9999	V-belt		10 kW at idle/13 kW at full speed	2 pc.	2244137
			V-belt pulley		10 kW at idle/13 kW at full speed		2236103
	1511	10 - 9999	V-belt		10 kW at idle/13 kW at full speed	1 pc.	2530764
			V-belt pulley		10 kW at idle/13 kW at full speed		2518341
SUPER 1300-2	0811	10 - 9999	V-belt		7 kW at idle/13 kW at full speed	2 pc.	2048342
			V-belt pulley		7 kW at idle/13 kW at full speed		2044085

V-BELTS							
Series code	Serial code	Series range	Part	Version	Power	Require-ment	Part no.
SUPER 1300-3	1011	10 - 9999	V-belt		10 kW at idle/13 kW at full speed	2 pc.	2244137
			V-belt pulley		10 kW at idle/13 kW at full speed		2236103
	1411	10 - 9999	V-belt		10 kW at idle/13 kW at full speed	1 pc.	2530764
			V-belt pulley		10 kW at idle/13 kW at full speed		2518341
SUPER 1300-3i	1011	10 - 9999	V-belt		10 kW at idle/13 kW at full speed	2 pc.	2244137
			V-belt pulley		10 kW at idle/13 kW at full speed		2236103
	1411	10 - 9999	V-belt		10 kW at idle/13 kW at full speed	1 pc.	2530764
			V-belt pulley		10 kW at idle/13 kW at full speed		2518341
SUPER 1303-2	0911	10 - 9999	V-belt		7 kW at idle/13 kW at full speed	2 pc.	2048342
			V-belt pulley		7 kW at idle/13 kW at full speed		2044085
SUPER 1303-3	1111	10 - 9999	V-belt		10 kW at idle/13 kW at full speed	2 pc.	2244137
			V-belt pulley		10 kW at idle/13 kW at full speed		2236103
	1511	10 - 9999	V-belt		10 kW at idle/13 kW at full speed	1 pc.	2530764
			V-belt pulley		10 kW at idle/13 kW at full speed		2518341
SUPER 1303-3i	1111	10 - 9999	V-belt		10 kW at idle/13 kW at full speed	2 pc.	2244137
			V-belt pulley		10 kW at idle/13 kW at full speed		2236103
	1511	10 - 9999	V-belt		10 kW at idle/13 kW at full speed	1 pc.	2530764
			V-belt pulley		10 kW at idle/13 kW at full speed		2518341
SUPER 1600-1	0782	10 - 9999	V-belt		22 kW at idle/36 kW at full speed; 13 kW at idle/18 kW at full speed; 27 kW at idle/44 kW at full speed	1 pc.	2028978
			V-belt pulley		13 kW at idle/18 kW at full speed; 27 kW at idle/44 kW at full speed; 22 kW at idle/36 kW at full speed		2009797
	0982	10 - 9999	V-belt	Standard		1 pc.	2028978
				Power		1 pc.	2036648
			V-belt pulley	Power			2032523
				Standard			2014529

V-BELTS

Series code	Serial code	Series range	Part	Version	Power	Require-ment	Part no.
SUPER 1600-2	1182	10 - 9999	V-belt		13 kW at idle/18 kW at full speed; 22 kW at idle/36 kW at full speed; 27 kW at idle/44 kW at full speed	1 pc.	2028978
			V-belt pulley		13 kW at idle/18 kW at full speed; 22 kW at idle/36 kW at full speed; 27 kW at idle/44 kW at full speed		2009797
SUPER 1603-1	0783	10 - 9999	V-belt		13 kW at idle/18 kW at full speed; 22 kW at idle/36 kW at full speed	1 pc.	2028978
			V-belt pulley		13 kW at idle/18 kW at full speed; 22 kW at idle/36 kW at full speed		2009797
SUPER 1603-2	0883	10 - 9999	V-belt		13 kW at idle/18 kW at full speed; 22 kW at idle/36 kW at full speed	1 pc.	2028978
			V-belt pulley		13 kW at idle/18 kW at full speed; 22 kW at idle/36 kW at full speed		2009797
SUPER 1800-1	0782	10 - 9999	V-belt		13 kW at idle/18 kW at full speed; 22 kW at idle/36 kW at full speed; 27 kW at idle/44 kW at full speed	1 pc.	2028978
			V-belt pulley		13 kW at idle/18 kW at full speed; 22 kW at idle/36 kW at full speed; 27 kW at idle/44 kW at full speed		2009797
	0982	10 - 9999	V-belt	Standard		1 pc.	2028978
				Power		1 pc.	2036648
			V-belt pulley	Power			2032523
				Standard			2014529
SUPER 1800-2	1182	10 - 9999	V-belt		13 kW at idle/18 kW at full speed; 22 kW at idle/36 kW at full speed; 27 kW at idle/44 kW at full speed	1 pc.	2028978
			V-belt pulley		13 kW at idle/18 kW at full speed; 22 kW at idle/36 kW at full speed; 27 kW at idle/44 kW at full speed		2009797
SUPER 1803-1	0783	10 - 9999	V-belt		13 kW at idle/18 kW at full speed; 22 kW at idle/36 kW at full speed	1 pc.	2028978

V-BELTS							
Series code	Serial code	Series range	Part	Version	Power	Require-ment	Part no.
SUPER 1803-1	0783	10 - 9999	V-belt pulley		13 kW at idle/18 kW at full speed; 22 kW at idle/36 kW at full speed		2009797
SUPER 1803-2	0883	10 - 9999	V-belt		13 kW at idle/18 kW at full speed; 22 kW at idle/36 kW at full speed	1 pc.	2028978
			V-belt pulley		13 kW at idle/18 kW at full speed; 22 kW at idle/36 kW at full speed		2009797
SUPER 1900-2	0719	10 - 9999	V-belt		22 kW at idle/36 kW at full speed; 27 kW at idle/44 kW at full speed	1 pc.	2034969
			V-belt pulley		22 kW at idle/36 kW at full speed; 27 kW at idle/44 kW at full speed		2034929
SUPER 2100-2	0719	10 - 9999	V-belt		22 kW at idle/36 kW at full speed; 27 kW at idle/44 kW at full speed	1 pc.	2034969
			V-belt pulley		22 kW at idle/36 kW at full speed; 27 kW at idle/44 kW at full speed		2034929
SUPER 2100-2 IP	0719	727 - 852	V-belt		27 kW at idle/44 kW at full speed	1 pc.	2034969
		727 - 9999	V-belt pulley		27 kW at idle/44 kW at full speed		2034929
		853 - 9999	V-belt		27 kW at idle/44 kW at full speed	1 pc.	2131259
SUPER 1800-2 SJ	1182	10 - 9999	V-belt		13 kW at idle/18 kW at full speed; 22 kW at idle/36 kW at full speed; 27 kW at idle/44 kW at full speed	1 pc.	2028978
			V-belt pulley		13 kW at idle/18 kW at full speed; 22 kW at idle/36 kW at full speed; 27 kW at idle/44 kW at full speed		2009797

PRESSURE BARS

VÖGELE pressure bars use pulsed-flow hydraulics to maximise the degree of compaction and are thus subject to extreme loads.

PRESSURE BARS							
Series code	Serial code	Pressure bar designation	Screed version	Position	Extension	Version	Part no.
AB 500	10AB	P1	TP2	Basic screed, left			2004020
		P2	TP1; TP2	Screed extension, right	0.225 m		4611353686
		P2	TP1; TP2	Basic screed, left			2004023
		P2	TP1; TP2	Basic screed, right			2004024
		P1	TP2	Extending screed, left			2004025
		P1	TP2	Extending screed, right			2004026
		P2	TP1; TP2	Extending screed, left			2004027
		P2	TP1; TP2	Extending screed, right			2004028
		P1	TP2	Screed extension, left	0.75 m		2004600
		P1	TP2	Screed extension, right	0.75 m		2004601
		P2	TP1; TP2	Screed extension, left	0.75 m		2004603
		P2	TP1; TP2	Screed extension, right	0.75 m		2004604
		P1	TP2	Screed extension, left	1.25 m		2004610
		P1	TP2	Screed extension, right	1.25 m		2004611
		P2	TP1; TP2	Screed extension, left	1.25 m		2004612
		P2	TP1; TP2	Screed extension, right	1.25 m		2004613
		P1	TP2	Screed extension, left	0.225 m		4611353681
		P1	TP2	Screed extension, right	0.225 m		4611353683
		P2	TP1; TP2	Screed extension, left	0.225 m		4611353685
		P1	TP2	Basic screed, right			2004022

PRESSURE BARS							
Series code	Serial code	Pressure bar designation	Screed version	Position	Extension	Version	Part no.
AB 500-2	15AB	P2	TP1; TP2	Screed extension, right	1.25 m		2004613
		P2	TP1; TP2	Screed extension, left	1.25 m		2004612
		P1	TP2	Screed extension, right	0.25 m		2041251
		P2	TP1; TP2	Screed extension, left	0.25 m		2041252
		P2	TP1; TP2	Screed extension, right	0.25 m		2041253
		P1	TP2	Basic screed, left			2004020
		P1	TP2	Basic screed, right			2004022
		P2	TP1; TP2	Basic screed, left			2004023
		P2	TP1; TP2	Basic screed, right			2004024
		P1	TP2	Extending screed, left			2004025
		P1	TP2	Extending screed, right			2004026
		P2	TP1; TP2	Extending screed, left			2004027
		P2	TP1; TP2	Extending screed, right			2004028
		P1	TP2	Screed extension, left	0.75 m		2004600
		P1	TP2	Screed extension, right	0.75 m		2004601
		P2	TP1; TP2	Screed extension, left	0.75 m		2004603
		P2	TP1; TP2	Screed extension, right	0.75 m		2004604
		P1	TP2	Screed extension, left	1.25 m		2004610
		P1	TP2	Screed extension, right	1.25 m		2004611
		P1	TP2	Screed extension, left	0.25 m		2041249
AB 500-3	24AB	P1	TP2	Basic screed, left			2004020
		P2	TP1; TP2	Screed extension, right	0.25 m		2041253
		P2	TP1; TP2	Basic screed, left			2004023
		P2	TP1; TP2	Basic screed, right			2004024
		P1	TP2	Extending screed, left			2004025
		P1	TP2	Extending screed, right			2004026

PRESSURE BARS

Series code	Serial code	Pressure bar designation	Screed version	Position	Extension	Version	Part no.
AB 500-3	24AB	P2	TP1; TP2	Extending screed, left			2004027
		P2	TP1; TP2	Extending screed, right			2004028
		P1	TP2	Screed extension, left	0.75 m		2004600
		P1	TP2	Screed extension, right	0.75 m		2004601
		P2	TP1; TP2	Screed extension, left	0.75 m		2004603
		P2	TP1; TP2	Screed extension, right	0.75 m		2004604
		P1	TP2	Screed extension, left	1.25 m		2004610
		P1	TP2	Screed extension, right	1.25 m		2004611
		P2	TP1; TP2	Screed extension, left	1.25 m		2004612
		P2	TP1; TP2	Screed extension, right	1.25 m		2004613
		P1	TP2	Screed extension, left	0.25 m		2041249
		P1	TP2	Screed extension, right	0.25 m		2041251
		P2	TP1; TP2	Screed extension, left	0.25 m		2041252
		P1	TP2	Basic screed, right			2004022
AB 600	11AB	P2	TP2; TP1	Screed extension, left	0.225 m		4611353685
		P1	TP2	Screed extension, right	0.225 m		4611353683
		P1	TP2	Basic screed, left			2004573
		P1	TP2	Basic screed, right			2004574
		P2	TP1; TP2	Basic screed, left			2004575
		P2	TP1; TP2	Basic screed, right			2004576
		P1	TP2	Extending screed, left			2004577
		P1	TP2	Extending screed, right			2004578
		P2	TP1; TP2	Extending screed, left			2004579
		P2	TP1; TP2	Extending screed, right			2004580
		P1	TP2	Screed extension, left	0.75 m		2004600
		P1	TP2	Screed extension, right	0.75 m		2004601

PRESSURE BARS							
Series code	Serial code	Pressure bar designation	Screed version	Position	Extension	Version	Part no.
AB 600	11AB	P2	TP2; TP1	Screed extension, left	0.75 m		2004603
		P2	TP2; TP1	Screed extension, right	0.75 m		2004604
		P1	TP2	Screed extension, left	1.25 m		2004610
		P1	TP2	Screed extension, right	1.25 m		2004611
		P2	TP2; TP1	Screed extension, left	1.25 m		2004612
		P2	TP2; TP1	Screed extension, right	1.25 m		2004613
		P1	TP2	Screed extension, left	0.225 m		4611353681
		P2	TP2; TP1	Screed extension, right	0.225 m		4611353686
AB 600-2	17AB	P1	TP2	Basic screed, left			2004573
		P2	TP1; TP2	Screed extension, right	0.25 m		2041253
		P2	TP1; TP2	Basic screed, left			2004575
		P2	TP1; TP2	Basic screed, right			2004576
		P1	TP2	Extending screed, left			2004577
		P1	TP2	Extending screed, right			2004578
		P2	TP1; TP2	Extending screed, left			2004579
		P2	TP1; TP2	Extending screed, right			2004580
		P1	TP2	Screed extension, left	0.75 m		2004600
		P1	TP2	Screed extension, right	0.75 m		2004601
		P2	TP1; TP2	Screed extension, left	0.75 m		2004603
		P2	TP1; TP2	Screed extension, right	0.75 m		2004604
		P1	TP2	Screed extension, left	1.25 m		2004610
		P1	TP2	Screed extension, right	1.25 m		2004611
		P2	TP1; TP2	Screed extension, left	1.25 m		2004612
		P2	TP1; TP2	Screed extension, right	1.25 m		2004613
		P1	TP2	Screed extension, left	0.25 m		2041249
		P1	TP2	Screed extension, right	0.25 m		2041251

PRESSURE BARS

Series code	Serial code	Pressure bar designation	Screed version	Position	Extension	Version	Part no.
AB 600-2	17AB	P2	TP1; TP2	Screed extension, left	0.25 m		2041252
		P1	TP2	Basic screed, right			2004574
AB 600-3	26AB	P1	TP2	Basic screed, left			2004573
		P1	TP2	Basic screed, right			2004574
		P2	TP1; TP2	Basic screed, left			2004575
		P2	TP1; TP2	Basic screed, right			2004576
		P1	TP2	Extending screed, left			2004577
		P1	TP2	Extending screed, right			2004578
		P2	TP1; TP2	Extending screed, left			2004579
		P2	TP1; TP2	Extending screed, right			2004580
		P1	TP2	Screed extension, left	0.75 m		2004600
		P1	TP2	Screed extension, right	0.75 m		2004601
		P2	TP1; TP2	Screed extension, left	0.75 m		2004603
		P2	TP1; TP2	Screed extension, right	0.75 m		2004604
		P1	TP2	Screed extension, left	1.25 m		2004610
		P1	TP2	Screed extension, right	1.25 m		2004611
		P2	TP1; TP2	Screed extension, left	1.25 m		2004612
		P2	TP1; TP2	Screed extension, right	1.25 m		2004613
		P1	TP2	Screed extension, left	0.25 m		2041249
		P1	TP2	Screed extension, right	0.25 m		2041251
		P2	TP1; TP2	Screed extension, left	0.25 m		2041252
		P2	TP1; TP2	Screed extension, right	0.25 m		2041253
SB 250	02SB	P1	TP2	Screed extension, left	0.75 m	telescoping	4611353467
		P2	TP1; TP2	Screed extension, right	0.75 m	telescoping	4611353466
		P1	TP2	Screed extension, right	0.75 m	telescoping	4611353468
		P2	TP1; TP2	Screed extension, left	0.75 m	telescoping	4611353465

PRESSURE BARS							
Series code	Serial code	Pressure bar designation	Screed version	Position	Extension	Version	Part no.
SB 250	02SB	P2	TP1; TP2	Basic screed, right			4611353213
		P2	TP1; TP2	Basic screed, left			4611353212
		P1	TP2	Basic screed, right			4611353211
		P1	TP2	Basic screed, left			4611353210
		P2	TP1; TP2	Screed extension, right	1.5 m		4611353144
		P1	TP2	Screed extension, right	1.5 m		4611353143
		P2	TP1; TP2	Screed extension, left	1.5 m		4611353140
		P1	TP2	Screed extension, left	1.5 m		4611353139
		P2	TP1; TP2	Screed extension, right	1.0 m		4611353136
		P1	TP2	Screed extension, right	1.0 m		4611353135
		P2	TP1; TP2	Screed extension, left	1.0 m		4611353132
		P1	TP2	Screed extension, left	1.0 m		4611353131
		P2	TP1; TP2	Screed extension, right	0.5 m		4611353128
		P1	TP2	Screed extension, right	0.5 m		4611353127
		P2	TP1; TP2	Screed extension, left	0.5 m		4611353124
		P1	TP2	Screed extension, left	0.5 m		4611353123
		P2	TP1; TP2	Screed extension, right	0.25 m		4611353120
		P1	TP2	Screed extension, right	0.25 m		4611353119
		P2	TP1; TP2	Screed extension, left	0.25 m		4611353116
		P1	TP2	Screed extension, left	0.25 m		4611353115
SB 250-2	05SB	P1	TP2	Screed extension, left	0.75 m	telescoping	4611353467
		P1	TP2	Screed extension, left	0.25 m		4611353115
		P2	TP1; TP2	Screed extension, right	0.75 m	telescoping	4611353466
		P2	TP1; TP2	Screed extension, left	0.75 m	telescoping	4611353465
		P2	TP1; TP2	Basic screed, right			4611353213
		P2	TP1; TP2	Basic screed, left			4611353212

PRESSURE BARS

Series code	Serial code	Pressure bar designation	Screed version	Position	Extension	Version	Part no.
SB 250-2	05SB	P1	TP2	Basic screed, right			4611353211
		P1	TP2	Basic screed, left			4611353210
		P2	TP1; TP2	Screed extension, right	1.5 m		4611353144
		P1	TP2	Screed extension, right	1.5 m		4611353143
		P2	TP1; TP2	Screed extension, left	1.5 m		4611353140
		P1	TP2	Screed extension, left	1.5 m		4611353139
		P2	TP1; TP2	Screed extension, right	1.0 m		4611353136
		P1	TP2	Screed extension, right	1.0 m		4611353135
		P2	TP1; TP2	Screed extension, left	1.0 m		4611353132
		P1	TP2	Screed extension, left	1.0 m		4611353131
		P2	TP1; TP2	Screed extension, right	0.5 m		4611353128
		P1	TP2	Screed extension, right	0.5 m		4611353127
		P2	TP1; TP2	Screed extension, left	0.5 m		4611353124
		P1	TP2	Screed extension, left	0.5 m		4611353123
		P2	TP1; TP2	Screed extension, right	0.25 m		4611353120
		P1	TP2	Screed extension, right	0.25 m		4611353119
		P2	TP1; TP2	Screed extension, left	0.25 m		4611353116
		P1	TP2	Screed extension, right	0.75 m	telescoping	4611353468
SB 300	03SB	P1	TP2	Screed extension, right	0.25 m		4611353119
		P2	TP1; TP2	Screed extension, right	0.25 m		4611353120
		P1	TP2	Screed extension, left	0.5 m		4611353123
		P2	TP1; TP2	Screed extension, left	0.5 m		4611353124
		P1	TP2	Screed extension, right	0.5 m		4611353127
		P2	TP1; TP2	Screed extension, right	0.5 m		4611353128
		P1	TP2	Screed extension, left	1.0 m		4611353131
		P2	TP1; TP2	Screed extension, left	1.0 m		4611353132

PRESSURE BARS							
Series code	Serial code	Pressure bar designation	Screed version	Position	Extension	Version	Part no.
SB 300	03SB	P1	TP2	Screed extension, right	1.0 m		4611353135
		P2	TP1; TP2	Screed extension, right	1.0 m		4611353136
		P1	TP2	Screed extension, left	1.5 m		4611353139
		P2	TP1; TP2	Screed extension, left	1.5 m		4611353140
		P1	TP2	Screed extension, right	1.5 m		4611353143
		P2	TP1; TP2	Screed extension, right	1.5 m		4611353144
		P2	TP1; TP2	Screed extension, left	0.75 m	telescoping	4611353465
		P2	TP1; TP2	Screed extension, right	0.75 m	telescoping	4611353466
		P1	TP2	Screed extension, left	0.75 m	telescoping	4611353467
		P1	TP2	Screed extension, right	0.75 m	telescoping	4611353468
		P1	TP2	Basic screed, left			4611353107
		P1	TP2	Basic screed, right			4611353108
		P2	TP1; TP2	Basic screed, left			4611353109
		P2	TP1; TP2	Basic screed, right			4611353110
		P1	TP2	Screed extension, left	0.25 m		4611353115
		P2	TP1; TP2	Screed extension, left	0.25 m		4611353116
SB 300-2	06SB	P1	TP2	Basic screed, left			4611353107
		P1	TP2	Screed extension, right	0.75 m	telescoping	4611353468
		P2	TP1; TP2	Basic screed, left			4611353109
		P2	TP1; TP2	Basic screed, right			4611353110
		P1	TP2	Screed extension, left	0.25 m		4611353115
		P2	TP1; TP2	Screed extension, left	0.25 m		4611353116
		P1	TP2	Screed extension, right	0.25 m		4611353119
		P2	TP1; TP2	Screed extension, right	0.25 m		4611353120
		P1	TP2	Screed extension, left	0.5 m		4611353123
		P2	TP1; TP2	Screed extension, left	0.5 m		4611353124

PRESSURE BARS

Series code	Serial code	Pressure bar designation	Screed version	Position	Extension	Version	Part no.
SB 300-2	06SB	P1	TP2	Screed extension, right	0.5 m		4611353127
		P2	TP1; TP2	Screed extension, right	0.5 m		4611353128
		P1	TP2	Screed extension, left	1.0 m		4611353131
		P2	TP1; TP2	Screed extension, left	1.0 m		4611353132
		P1	TP2	Screed extension, right	1.0 m		4611353135
		P2	TP1; TP2	Screed extension, right	1.0 m		4611353136
		P1	TP2	Screed extension, left	1.5 m		4611353139
		P2	TP1; TP2	Screed extension, left	1.5 m		4611353140
		P1	TP2	Screed extension, right	1.5 m		4611353143
		P2	TP1; TP2	Screed extension, right	1.5 m		4611353144
		P2	TP1; TP2	Screed extension, left	0.75 m	telescoping	4611353465
		P2	TP1; TP2	Screed extension, right	0.75 m	telescoping	4611353466
		P1	TP2	Screed extension, left	0.75 m	telescoping	4611353467
		P1	TP2	Basic screed, right			4611353108
SB 300-3	09SB	P2	TP1; TP2	Screed extension, left	0.25 m		2041252
		P2	TP1; TP2	Screed extension, right	0.25 m		2041253
		P1	TP2	Screed extension, right	0.25 m		2041251
		P1	TP2	Screed extension, left	0.25 m		2041249
		P1	TP2	Screed extension, right	1.5 m		2584104
		P2	TP1; TP2	Screed extension, left	1.5 m		2583873
		P2	TP1; TP2	Screed extension, right	0.5 m		2620848
		P2	TP1; TP2	Screed extension, left	1.25 m	telescoping	2589840
		P1	TP2	Screed extension, right	0.5 m		2620807
		P2	TP1; TP2	Screed extension, left	0.5 m		2614791
		P2	TP1; TP2	Screed extension, right	1.25 m	telescoping	2591478
		P1	TP2	Screed extension, left	0.5 m		2614786

PRESSURE BARS							
Series code	Serial code	Pressure bar designation	Screed version	Position	Extension	Version	Part no.
SB 300-3	09SB	P1	TP2	Basic screed, right			2586873
		P1	TP2	Basic screed, left			2585629
		P2	TP1; TP2	Basic screed, right			2585628
		P2	TP1; TP2	Basic screed, left			2585396
		P1	TP2	Screed extension, left	1.5 m		2584026
		P2	TP1; TP2	Screed extension, right	1.0 m		2582977
		P1	TP2	Screed extension, left	1.25 m	telescoping	2598483
		P2	TP1; TP2	Screed extension, right	1.5 m		2583960
		P2	TP1; TP2	Screed extension, left	1.0 m		2582875
		P1	TP2	Screed extension, right	1.0 m		2582521
		P1	TP2	Screed extension, left	1.0 m		2582381
		P1	TP2	Screed extension, right	1.25 m	telescoping	2598488
SB 350-3	10SB	P1	TP2	Screed extension, left	1.0 m		2582381
		P2	TP1; TP2	Screed extension, left	1.25 m	telescoping	2589840
		P2	TP1; TP2	Screed extension, left	0.25 m		2041252
		P2	TP1; TP2	Screed extension, right	0.5 m		2620848
		P1	TP2	Screed extension, right	1.25 m	telescoping	2598488
		P2	TP1; TP2	Screed extension, right	1.5 m		2583960
		P2	TP1; TP2	Screed extension, right	0.25 m		2041253
		P1	TP2	Screed extension, left	0.5 m		2614786
		P1	TP2	Screed extension, left	1.25 m	telescoping	2598483
		P1	TP2	Screed extension, right	0.25 m		2041251
		P2	TP1; TP2	Basic screed, left			2597818
		P2	TP1; TP2	Basic screed, right			2598020
		P1	TP2	Basic screed, left			2597840
		P2	TP1; TP2	Screed extension, right	1.0 m		2582977

PRESSURE BARS							
Series code	Serial code	Pressure bar designation	Screed version	Position	Extension	Version	Part no.
SB 350-3	10SB	P1	TP2	Screed extension, right	1.5 m		2584104
		P1	TP2	Screed extension, left	0.25 m		2041249
		P2	TP1; TP2	Screed extension, left	0.5 m		2614791
		P2	TP1; TP2	Screed extension, left	1.5 m		2583873
		P1	TP2	Screed extension, right	0.5 m		2620807
		P1	TP2	Screed extension, left	1.5 m		2584026
		P2	TP1; TP2	Screed extension, right	1.25 m	telescoping	2591478
		P1	TP2	Basic screed, right			2598031
		P1	TP2	Screed extension, right	1.0 m		2582521
		P2	TP1; TP2	Screed extension, left	1.0 m		2582875

SERVICE PACKAGE FOR SCREEDS

The service packages for screeds ensure that you are always optimally equipped to quickly replace your screed's most important wear and spare parts. The package includes all the screed plates, tamper bars, pressure bars, heating rods and spring steel strips as well as the complete insulation and mounting material.

SERVICE PACKAGE FOR SCREEDS								
Series code	Serial code	Series range	Berm	Screed plate size	Screed plate depth	Screed version	Version	Part no.
AB 200	12AB	10 - 289		10 mm	300 mm	TV		2037578
		10 - 546		10 mm	300 mm	V		2037577
		290 - 9999		10 mm	300 mm	TV		2049834
		547 - 9999		10 mm	300 mm	V		2074368
AB 220-3	28AB	10 - 9999		10 mm	300 mm	V		2436324
				10 mm	300 mm	TV		2436327

SERVICE PACKAGE FOR SCREEDS								
Series code	Serial code	Series range	Berm	Screed plate size	Screed plate depth	Screed version	Version	Part no.
AB 340	13AB	10 - 492		10 mm	300 mm	V		2069226
		10 - 9999		12 mm	300 mm	TV		2069225
		493 - 9999		10 mm	300 mm	V		2135330
AB 340-3	27AB	10 - 9999		10 mm	300 mm	V		2318801
				12 mm	300 mm	TV		2318821
AB 480-3	29AB	10 - 9999		12 mm	300 mm	TV		2468272
AB 500	10AB	10 - 9999		15 mm	300 mm	TV		2009421
				15 mm	300 mm	TP1		2009422
				15 mm	300 mm	TP2		2009423
				15 mm	330 mm	TV		2047365
AB 500-2	14AB	10 - 9999		15 mm	330 mm	TV		2051692
	15AB	10 - 9999		15 mm	330 mm	TP1		2051693
				15 mm	330 mm	TP2		2051694
AB 500-3	23AB	10 - 9999		12 mm	320 mm	TV		2310096
	24AB	10 - 9999		12 mm	320 mm	TP1		2310251
				12 mm	320 mm	TP2		2310253
AB 600	11AB	10 - 9999		15 mm	300 mm	TV		2013177
				15 mm	300 mm	TP1		2013178
				15 mm	300 mm	TP2		2013179
				15 mm	330 mm	TV		2047510
AB 600-2	16AB	10 - 9999		15 mm	330 mm	TV		2073390
	17AB	10 - 9999		15 mm	330 mm	TP1		2073391
				15 mm	330 mm	TP2		2073392
AB 600-3	25AB	10 - 9999		12 mm	320 mm	TV		2310246
	26AB	10 - 9999		12 mm	320 mm	TP1		2310305
				12 mm	320 mm	TP2		2310306

SERVICE PACKAGE FOR SCREEDS

Series code	Serial code	Series range	Berm	Screed plate size	Screed plate depth	Screed version	Version	Part no.
VF 500-2	19AB	10 - 9999	24-inch berm, right	12 mm	300 mm	V	Extending parts	2537196
			without berm, left, 90°	12 mm	300 mm	V	Extending parts	2478724
				12 mm	300 mm	V	complete standard, 60°	2584475
			without berm, right, 60°	12 mm	300 mm	V	Extending parts	2584383
			without berm, left, 60°	12 mm	300 mm	V	Extending parts	2584382
			without berm, right, 90°	12 mm	300 mm	V	Extending parts	2478727
			24-inch berm, left	12 mm	300 mm	V	Extending parts	2537192
			18-inch berm, right	12 mm	300 mm	V	Extending parts	2537187
			18-inch berm, left	12 mm	300 mm	V	Extending parts	2537184
			12-inch berm, right	12 mm	300 mm	V	Extending parts	2537181
			12-inch berm, left	12 mm	300 mm	V	Extending parts	2537176
				12 mm	300 mm	V	complete standard, 90°	2478782
VF 600-2	20AB	10 - 9999		12 mm	300 mm	V	complete standard, 90°	2478737
				12 mm	300 mm	V	complete standard, 60°	2584474
		29 - 9999	without berm, right, 60°	12 mm	300 mm	V	Extending parts	2584386
			without berm, left, 60°	12 mm	300 mm	V	Extending parts	2584384

SERVICE PACKAGE FOR SCREEDS								
Series code	Serial code	Series range	Berm	Screed plate size	Screed plate depth	Screed version	Version	Part no.
VF 600-2	20AB	29 - 9999	24-inch berm, right	12 mm	300 mm	V	Extending parts	2537501
			24-inch berm, left	12 mm	300 mm	V	Extending parts	2537499
			18-inch berm, right	12 mm	300 mm	V	Extending parts	2537497
			18-inch berm, left	12 mm	300 mm	V	Extending parts	2537496
			12-inch berm, right	12 mm	300 mm	V	Extending parts	2537495
			12-inch berm, left	12 mm	300 mm	V	Extending parts	2537486
			without berm, right, 90°	12 mm	300 mm	V	Extending parts	2478713
			without berm, left, 90°	12 mm	300 mm	V	Extending parts	2478703
VR 600-2	18AB	10 - 9999		12 mm	300 mm	V		2204910
SB 250	02SB	10 - 9999		15 mm	300 mm	TV		4617500026
				15 mm	300 mm	TP1		4617500027
				15 mm	300 mm	TP2		4617500028
SB 250-2	05SB	10 - 9999		15 mm	300 mm	TP1		2166154
				15 mm	300 mm	TV		2166153
				15 mm	300 mm	TP2		2166155
SB 300	03SB	10 - 9999		15 mm	300 mm	TV		4617500029
				15 mm	300 mm	TP1		4617500030
				15 mm	300 mm	TP2		4617500031
SB 300-2	06SB	10 - 9999		15 mm	300 mm	TV		2166156
				15 mm	300 mm	TP1		2166157
				15 mm	300 mm	TP2		2166158
VF 500-3	30AB	10 - 9999		12 mm	610 mm	V	Extending parts	2687901
			without berm, left, 60°	12 mm	300 mm	V	complete, left, w/o berm, 60°	2584382

SERVICE PACKAGE FOR SCREEDS

Series code	Serial code	Series range	Berm	Screed plate size	Screed plate depth	Screed version	Version	Part no.
VF 500-3	30AB	10 - 9999	without berm, right, 60°	12 mm	300 mm	V	complete, right, w/o berm, 60°	2584383
						V	Heating rods	3027027
				12 mm	610 mm	V	Basic screed	2687896
VF 600-3	31AB	10 - 9999				V	Heating rods	3027029
				12 mm	610 mm	V	Basic screed	2687910
				12 mm	610 mm	V	Extending parts	2687918
			without berm, left, 60°	12 mm	300 mm	V	complete, left, w/o berm, 60°	2584384
			without berm, right, 60°	12 mm	300 mm	V	complete, right, w/o berm, 60°	2584386
AB 220	36AB	10 - 9999		10 mm	300 mm	V		2436324
				10 mm	300 mm	TV		2436327
SB 300-3	07SB	10 - 9999		12 mm	450 mm	TV		2640660
				12 mm	450 mm	TV	HD	2640746
SB 350-3	08SB	10 - 9999		12 mm	450 mm	TV		2641247
SB 300-3	09SB	10 - 9999		12 mm	450 mm	TP2		2641284
				12 mm	450 mm	TP1		2641273
SB 350-3	10SB	10 - 9999		12 mm	450 mm	TP1		2641664
				12 mm	450 mm	TP2		2641672

SERVICE PACKAGE FOR SCREED EXTENSIONS

In addition to screed plates, tamper bars and pressure bars, the service package for VÖGELE screed extensions also includes heating rods and spring steel strips as well as the complete insulation and mounting material. In other words, everything you need to maintain and repair your screed extension.

SERVICE PACKAGE FOR SCREED EXTENSIONS

Series code	Serial code	Series range	Screed plate depth	Berm	Screed version	Part no.
AB 200	12AB	10 - 546			V	2037579
		10 - 9999			TV	2037580
					TV	2037581
		547 - 9999			V	2074369
AB 220-3	28AB	10 - 9999			V	2436328
					TV	2436329
					TV	2436330
AB 340	13AB	10 - 492			V	2069228
		10 - 9999			TV	2069229
					TV	2069227
		402 - 9999			TV	2160123
		493 - 9999			V	2135333
		623 - 9999			TV	2184162
		814 - 9999			V	2225607
AB 340-3	27AB	10 - 9999			V	2135333
					TV	2318857
					TV	2318853
					TV	2318834
					V	2318842
AB 480-3	29AB	10 - 9999			TV	2468284

SERVICE PACKAGE FOR SCREED EXTENSIONS

Series code	Serial code	Series range	Screed plate depth	Berm	Screed version	Part no.
AB 480-3	29AB	10 - 9999			TV	2518086
					TV	2518084
AB 500	10AB	10 - 9999	300 mm		TP2	2009426
			330 mm		TV	2047511
			330 mm		TV	2047509
			300 mm		TV	2013200
			300 mm		TP2	2013184
			300 mm		TP1	2013183
			300 mm		TP2	2013182
			300 mm		TP1	2013181
			300 mm		TV	2013180
			300 mm		TP1	2009425
			300 mm		TV	2009424
AB 500-2	14AB	10 - 9999			TV	2051728
					TV	2051736
					TV	2051719
	15AB	10 - 9999			TP2	2051730
					TP1	2051729
					TP2	2051721
					TP1	2051720
					TP1	2051737
					TP2	2051738
AB 500-3	23AB	10 - 9999			TV	2310232
					TV	2310237
					TV	2310239
	24AB	10 - 9999			TP1	2310298

SERVICE PACKAGE FOR SCREED EXTENSIONS						
Series code	Serial code	Series range	Screed plate depth	Berm	Screed version	Part no.
AB 500-3	24AB	10 - 9999			TP2	2310299
					TP2	2310303
					TP1	2310302
					TP1	2310296
					TP2	2310297
AB 600	11AB	10 - 9999	300 mm		TV	2009424
			300 mm		TP1	2009425
			300 mm		TP2	2009426
			300 mm		TV	2013180
			300 mm		TP1	2013181
			300 mm		TP2	2013182
			300 mm		TP1	2013183
			300 mm		TP2	2013184
			300 mm		TV	2013200
			330 mm		TV	2047509
			330 mm		TV	2047511
AB 600-2	16AB	10 - 9999			TV	2051736
					TV	2051728
					TV	2051719
	17AB	10 - 9999			TP1	2051737
					TP2	2051738
					TP2	2051730
					TP1	2051720
					TP2	2051721
					TP1	2051729
AB 600-3	25AB	10 - 9999			TV	2310237

SERVICE PACKAGE FOR SCREED EXTENSIONS

Series code	Serial code	Series range	Screed plate depth	Berm	Screed version	Part no.
AB 600-3	25AB	10 - 9999			TV	2310239
					TV	2310232
	26AB	10 - 9999			TP1	2310302
					TP2	2310303
					TP2	2310299
					TP1	2310298
					TP2	2310297
					TP1	2310296
VF 500-2	19AB	10 - 9999		12-inch berm	V	2307061
					V	2584390
					V	2584387
				24-inch berm	V	2307064
		29 - 9999		12-inch berm	V	2307061
				24-inch berm	V	2307064
VF 600-2	20AB	10 - 9999		12-inch berm	V	2307061
				24-inch berm	V	2307064
					V	2584387
					V	2584390
VR 600-2	18AB	10 - 9999			V	2228882
SB 250	02SB	10 - 9999			TP2	4617500034
					TV	4617500035
					TP1	4617500036
					TP2	4617500037
					TV	4617500038
					TP1	4617500039
					TP2	4617500040

SERVICE PACKAGE FOR SCREED EXTENSIONS						
Series code	Serial code	Series range	Screed plate depth	Berm	Screed version	Part no.
SB 250	02SB	10 - 9999			TV	4617500041
					TP1	4617500042
					TP2	4617500043
					TV	2047480
					TP1	2047481
					TP2	2047483
					TV	4617500032
					TP1	4617500033
SB 250-2	05SB	10 - 9999			TP2	2166464
					TV	2166451
					TV	2166462
					TV	2166454
					TP2	2166461
					TP1	2166460
					TV	2166459
					TP2	2166456
					TP1	2166455
					TP2	2166453
					TP1	2166452
					TV	2166465
					TP1	2166467
					TP2	2166468
					TP1	2166463
SB 300	03SB	10 - 9999			TP2	4617500040
					TP1	4617500039
					TV	4617500038

SERVICE PACKAGE FOR SCREED EXTENSIONS

Series code	Serial code	Series range	Screed plate depth	Berm	Screed version	Part no.
SB 300	03SB	10 - 9999			TP1	4617500036
					TV	4617500035
					TP2	4617500034
					TP1	4617500033
					TV	4617500032
					TP2	2047483
					TP1	2047481
					TV	2047480
					TP2	4617500037
					TP2	4617500043
					TP1	4617500042
					TV	4617500041
SB 300-2	06SB	10 - 9999			TV	2166451
					TP2	2166468
					TP2	2166453
					TV	2166454
					TP1	2166455
					TP2	2166456
					TV	2166459
					TP1	2166460
					TP2	2166461
					TV	2166462
					TP1	2166463
					TP1	2166467
					TV	2166465
					TP2	2166464

SERVICE PACKAGE FOR SCREED EXTENSIONS						
Series code	Serial code	Series range	Screed plate depth	Berm	Screed version	Part no.
SB 300-2	06SB	10 - 9999			TP1	2166452
VF 500-3	30AB	10 - 9999			V	2584387
					V	2584390
VF 600-3	31AB	10 - 9999			V	2584387
					V	2584390
AB 220	36AB	10 - 9999			V	2436328
					TV	2436329
					TV	2436330
SB 300-3	07SB	10 - 9999			TV	2640867
					TV	2640870
					TV	2640879
					TV	2640883
					TV	2640896
					TV	2763284
					TV	2763291
					TV	2640823
					T	2640816
					T	2640811
					TV	2640798
SB 350-3	08SB	10 - 9999			TV	2763291
					TV	2763284
					TV	2640883
					TV	2640870
					TV	2640823
					T	2640811
					TV	2640798

SERVICE PACKAGE FOR SCREED EXTENSIONS

Series code	Serial code	Series range	Screed plate depth	Berm	Screed version	Part no.
SB 300-3	09SB	10 - 9999			TP2	2641550
					TP1	2763401
					TP2	2763431
					TP1	2763470
					TP2	2763478
					TP1	2641535
					TP2	2641525
					TP1	2641436
					TP2	2641426
					TP1	2641411
					TP2	2641316
					TP1	2641322
					TP2	2641405
					TP1	2641294
SB 350-3	10SB	10 - 9999			TP1	2641322
					TP2	2641405
					TP1	2641411
					TP2	2641426
					TP1	2641436
					TP2	2641525
					TP1	2641294
					TP2	2641550
					TP1	2763401
					TP2	2763431
					TP1	2763470
					TP2	2763478

SERVICE PACKAGE FOR SCREED EXTENSIONS						
Series code	Serial code	Series range	Screed plate depth	Berm	Screed version	Part no.
SB 350-3	10SB	10 - 9999			TP2	2641316
					TP1	2641535

TAMPER BAR

VÖGELE tamper bars are made of a highly wear-resistant steel alloy that ensures these particularly heavily stressed parts enjoy a long service life.

TAMPER BAR								
Series code	Serial code	Series range	Version	Screed version	Position	Extension	Please note	Part no.
AB 200	12AB	10 - 289		TV	Basic screed, left; Basic screed, right			2014805
		10 - 9999		TV	Screed extension, left; Screed extension, right	0.35 m		2028210
				TV	Screed extension, left; Screed extension, right	0.6 m		2030843
				TV	Extending screed, left; Extending screed, right			2020273
		290 - 9999		TV	Basic screed, left; Basic screed, right			2049732
AB 220-3	28AB	10 - 9999		TV	Basic screed, left; Basic screed, right			2339107
				TV	Screed extension, left; Screed extension, right	0.65 m		2376248

TAMPER BAR								
Series code	Serial code	Series range	Version	Screed version	Position	Extension	Please note	Part no.
AB 220-3	28AB	10 - 9999		TV	Screed extension, left; Screed extension, right	0.5 m		2374331
				TV	Extending screed, left; Extending screed, right			2339128
AB 340	13AB	10 - 9999		TV	Basic screed, left; Basic screed, right			2043707
				TV	Screed extension, left; Screed extension, right	0.4 m		2051125
				TV	Screed extension, left; Screed extension, right	0.55 m		2046991
				TV	Extending screed, left; Extending screed, right			2043892
AB 340-3	27AB	10 - 9999		TV	Basic screed, left; Basic screed, right			2234960
				TV	Extending screed, left; Extending screed, right			2235761
				TV	Screed extension, right	0.25 m		2260205
				TV	Screed extension, left; Screed extension, right	0.55 m		2255578
				TV	Screed extension, left	0.25 m		2259636
				TV	Screed extension, left; Screed extension, right	0.8 m		2254820
AB 480-3	29AB	10 - 9999	"Dash 3" version	TV	Basic screed, left			2202733
			"Dash 3" version	TV	Basic screed, right			2202847
			"Dash 3" version	TV	Extending screed, left			2202970
			"Dash 3" version	TV	Extending screed, right			2203022

TAMPER BAR								
Series code	Serial code	Series range	Version	Screed version	Position	Extension	Please note	Part no.
AB 480-3	29AB	10 - 9999		TV	Screed extension, left	1.25 m		2246446
				TV	Screed extension, right	0.6 m		2358094
				TV	Screed extension, left	0.75 m		2246755
				TV	Screed extension, right	0.75 m		2246761
				TV	Screed extension, left	0.25 m		2247041
				TV	Screed extension, right	0.25 m		2247043
				TV	Screed extension, left	0.6 m		2354575
				TV	Screed extension, right	1.25 m		2246448
AB 500	10AB	10 - 9999	"Dash 2" version	TV; TP	Basic screed, left			2003833
			"Dash 2" version	TV; TP	Basic screed, right			2003834
			"Dash 2" version	TV; TP	Extending screed, left			2003835
			"Dash 2" version	TV; TP	Extending screed, right			2003836
				TV; TP	Screed extension, right	0.225 m		4611353676
				TV; TP	Screed extension, right	0.75 m		2038931
				TV; TP	Screed extension, left	1.25 m		2038932
				TV; TP	Screed extension, right	1.25 m		2038933
				TV; TP	Screed extension, left	0.225 m		4611353675
				TV; TP	Screed extension, left	0.75 m		2038930
AB 500-2	14AB	10 - 9999	"Dash 2" version	TV	Basic screed, left			2003833
			"Dash 2" version	TV	Basic screed, right			2003834
			"Dash 2" version	TV	Extending screed, left			2003835
			"Dash 2" version	TV	Extending screed, right			2003836

TAMPER BAR								
Series code	Serial code	Series range	Version	Screed version	Position	Extension	Please note	Part no.
AB 500-2	14AB	10 - 9999	"Dash 3" version	TV	Basic screed, left		When upgrading to the "Dash 3" tamper bar version, the wear strips also need to be replaced: 4x 2261005	2202733
			"Dash 3" version	TV	Basic screed, right		When upgrading to the "Dash 3" tamper bar version, the wear strips also need to be replaced: 4x 2261005	2202847
				TV	Screed extension, right	0.25 m		2247043
			"Dash 3" version	TV	Extending screed, right		When upgrading to the "Dash 3" tamper bar version, the wear strips also need to be replaced: 4x 2261005	2203022
				TV	Screed extension, left	1.25 m		2246446
				TV	Screed extension, right	1.25 m		2246448
				TV	Screed extension, left	0.75 m		2246755
				TV	Screed extension, right	0.75 m		2246761
				TV	Screed extension, left	0.25 m		2247041
			"Dash 3" version	TV	Extending screed, left		When upgrading to the "Dash 3" tamper bar version, the wear strips also need to be replaced: 4x 2261005	2202970

TAMPER BAR								
Series code	Serial code	Series range	Version	Screed version	Position	Extension	Please note	Part no.
AB 500-2	15AB	10 - 9999	"Dash 2" version	TP	Basic screed, left			2003833
			"Dash 2" version	TP	Basic screed, right			2003834
			"Dash 2" version	TP	Extending screed, left			2003835
			"Dash 2" version	TP	Extending screed, right			2003836
			"Dash 3" version	TP	Basic screed, left		When upgrading to the "Dash 3" tamper bar version, the wear strips also need to be replaced: 4x 2261005	2202733
			"Dash 3" version	TP	Basic screed, right		When upgrading to the "Dash 3" tamper bar version, the wear strips also need to be replaced: 4x 2261005	2202847
				TP	Screed extension, right	1.25 m		2246448
			"Dash 3" version	TP	Extending screed, right		When upgrading to the "Dash 3" tamper bar version, the wear strips also need to be replaced: 4x 2261005	2203022
				TP	Screed extension, left	0.75 m		2246755
				TP	Screed extension, right	0.75 m		2246761
				TP	Screed extension, left	0.25 m		2247041
				TP	Screed extension, right	0.25 m		2247043
				TP	Screed extension, left	1.25 m		2246446

TAMPER BAR								
Series code	Serial code	Series range	Version	Screed version	Position	Extension	Please note	Part no.
AB 500-2	15AB	10 - 9999	"Dash 3" version	TP	Extending screed, left		When upgrading to the "Dash 3" tamper bar version, the wear strips also need to be replaced: 4x 2261005	2202970
AB 500-3	23AB	10 - 9999	"Dash 3" version	TV	Basic screed, left			2202733
			"Dash 3" version	TV	Basic screed, right			2202847
			"Dash 3" version	TV	Extending screed, left			2202970
			"Dash 3" version	TV	Extending screed, right			2203022
				TV	Screed extension, right	0.25 m		2247043
				TV	Screed extension, right	1.25 m		2246448
				TV	Screed extension, left	0.75 m		2246755
				TV	Screed extension, right	0.75 m		2246761
				TV	Screed extension, left	0.25 m		2247041
				TV	Screed extension, left	1.25 m		2246446
	24AB	10 - 9999	"Dash 3" version	TP	Basic screed, left			2202733
			"Dash 3" version	TP	Basic screed, right			2202847
			"Dash 3" version	TP	Extending screed, left			2202970
			"Dash 3" version	TP	Extending screed, right			2203022
				TP	Screed extension, right	0.25 m		2247043
				TP	Screed extension, right	1.25 m		2246448
				TP	Screed extension, left	0.75 m		2246755
				TP	Screed extension, right	0.75 m		2246761
				TP	Screed extension, left	0.25 m		2247041
				TP	Screed extension, left	1.25 m		2246446
AB 600	11AB	10 - 9999	"Dash 2" version	TV; TP	Basic screed, left			2003841

TAMPER BAR								
Series code	Serial code	Series range	Version	Screed version	Position	Extension	Please note	Part no.
AB 600	11AB	10 - 9999	"Dash 2" version	TV; TP	Basic screed, right			2003842
			"Dash 2" version	TV; TP	Extending screed, left			2003843
			"Dash 2" version	TV; TP	Extending screed, right			2003844
				TV; TP	Screed extension, right	0.225 m		4611353676
				TV; TP	Screed extension, right	0.75 m		2038931
				TV; TP	Screed extension, left	1.25 m		2038932
				TV; TP	Screed extension, right	1.25 m		2038933
				TV; TP	Screed extension, left	0.225 m		4611353675
				TV; TP	Screed extension, left	0.75 m		2038930
AB 600-2	16AB	10 - 9999	"Dash 2" version	TV	Basic screed, left			2003841
			"Dash 2" version	TV	Basic screed, right			2003842
			"Dash 2" version	TV	Extending screed, left			2003843
			"Dash 2" version	TV	Extending screed, right			2003844
			"Dash 3" version	TV	Basic screed, left		When upgrading to the "Dash 3" tamper bar version, the wear strips also need to be replaced: 4x 2261007	2203109
			"Dash 3" version	TV	Basic screed, right		When upgrading to the "Dash 3" tamper bar version, the wear strips also need to be replaced: 4x 2261007	2203136
				TV	Screed extension, right	0.25 m		2247043

TAMPER BAR								
Series code	Serial code	Series range	Version	Screed version	Position	Extension	Please note	Part no.
AB 600-2	16AB	10 - 9999	"Dash 3" version	TV	Extending screed, right		When upgrading to the "Dash 3" tamper bar version, the wear strips also need to be replaced: 4x 2261007	2203200
				TV	Screed extension, left	1.25 m		2246446
				TV	Screed extension, right	1.25 m		2246448
				TV	Screed extension, left	0.75 m		2246755
				TV	Screed extension, right	0.75 m		2246761
				TV	Screed extension, left	0.25 m		2247041
			"Dash 3" version	TV	Extending screed, left		When upgrading to the "Dash 3" tamper bar version, the wear strips also need to be replaced: 4x 2261007	2203171
	17AB	10 - 9999	"Dash 2" version	TP	Basic screed, left			2003841
			"Dash 2" version	TP	Basic screed, right			2003842
			"Dash 2" version	TP	Extending screed, left			2003843
			"Dash 2" version	TP	Extending screed, right			2003844
			"Dash 3" version	TP	Basic screed, left		When upgrading to the "Dash 3" tamper bar version, the wear strips also need to be replaced: 4x 2261007	2203109

TAMPER BAR								
Series code	Serial code	Series range	Version	Screed version	Position	Extension	Please note	Part no.
AB 600-2	17AB	10 - 9999	"Dash 3" version	TP	Basic screed, right		When upgrading to the "Dash 3" tamper bar version, the wear strips also need to be replaced: 4x 2261007	2203136
				TP	Screed extension, right	0.25 m		2247043
			"Dash 3" version	TP	Extending screed, right		When upgrading to the "Dash 3" tamper bar version, the wear strips also need to be replaced: 4x 2261007	2203200
				TP	Screed extension, left	1.25 m		2246446
				TP	Screed extension, right	1.25 m		2246448
				TP	Screed extension, left	0.75 m		2246755
				TP	Screed extension, right	0.75 m		2246761
				TP	Screed extension, left	0.25 m		2247041
			"Dash 3" version	TP	Extending screed, left		When upgrading to the "Dash 3" tamper bar version, the wear strips also need to be replaced: 4x 2261007	2203171
AB 600-3	25AB	10 - 9999	"Dash 3" version	TV	Extending screed, left			2203171
			"Dash 3" version	TV	Extending screed, right			2203200
				TV	Screed extension, left	1.25 m		2246446
				TV	Screed extension, right	1.25 m		2246448
				TV	Screed extension, left	0.75 m		2246755

TAMPER BAR								
Series code	Serial code	Series range	Version	Screed version	Position	Extension	Please note	Part no.
AB 600-3	25AB	10 - 9999		TV	Screed extension, right	0.75 m		2246761
				TV	Screed extension, left	0.25 m		2247041
				TV	Screed extension, right	0.25 m		2247043
			"Dash 3" version	TV	Basic screed, left			2203109
			"Dash 3" version	TV	Basic screed, right			2203136
	26AB	10 - 9999		TP	Screed extension, right	1.25 m		2246448
				TP	Screed extension, right	0.25 m		2247043
				TP	Screed extension, left	0.25 m		2247041
				TP	Screed extension, right	0.75 m		2246761
				TP	Screed extension, left	1.25 m		2246446
			"Dash 3" version	TP	Basic screed, left			2203109
			"Dash 3" version	TP	Basic screed, right			2203136
			"Dash 3" version	TP	Extending screed, left			2203171
			"Dash 3" version	TP	Extending screed, right			2203200
				TP	Screed extension, left	0.75 m		2246755
SB 250	02SB	10 - 9999		TV; TP	Basic screed, left			4611353204
					Screed extension, right	1.5 m		4611353095
					Screed extension, left	1.5 m		4611353094
			telescoping		Screed extension, right	0.75 m		4611352997
			telescoping		Screed extension, left	0.75 m		4611352996
					Screed extension, right	0.25 m		4611352948
					Screed extension, left	0.25 m		4611352947
					Screed extension, right	1.0 m		4611352550
					Screed extension, left	1.0 m		4611352549
					Screed extension, right	0.5 m		4611352327
				TV; TP	Basic screed, right			4611353205

TAMPER BAR								
Series code	Serial code	Series range	Version	Screed version	Position	Extension	Please note	Part no.
SB 250	02SB	10 - 9999			Screed extension, left	0.5 m		4611352326
SB 250-2	05SB	10 - 9999			Screed extension, right	0.25 m		4611352948
					Screed extension, left	0.25 m		4611352947
					Screed extension, right	1.0 m		4611352550
					Screed extension, left	1.0 m		4611352549
					Screed extension, right	0.5 m		4611352327
					Screed extension, left	0.5 m		4611352326
			telescoping		Screed extension, left	0.75 m		4611352996
				TV; TP	Basic screed, right			4611353205
				TV; TP	Basic screed, left			4611353204
					Screed extension, right	1.5 m		4611353095
					Screed extension, left	1.5 m		4611353094
			telescoping		Screed extension, right	0.75 m		4611352997
SB 300	03SB	10 - 9999			Screed extension, left	0.5 m		4611352326
					Screed extension, right	0.5 m		4611352327
					Screed extension, right	1.5 m		4611353095
					Screed extension, left	1.5 m		4611353094
				TV; TP	Basic screed, right			4611353074
				TV; TP	Basic screed, left			4611353073
			telescoping		Screed extension, right	0.75 m		4611352997
			telescoping		Screed extension, left	0.75 m		4611352996
					Screed extension, right	0.25 m		4611352948
					Screed extension, left	0.25 m		4611352947
					Screed extension, right	1.0 m		4611352550
					Screed extension, left	1.0 m		4611352549
SB 300-2	06SB	10 - 9999			Screed extension, left	0.5 m		4611352326

TAMPER BAR

Series code	Serial code	Series range	Version	Screed version	Position	Extension	Please note	Part no.
SB 300-2	06SB	10 - 9999	telescoping		Screed extension, left	0.75 m		4611352996
			telescoping		Screed extension, right	0.75 m		4611352997
				TV; TP	Basic screed, left			4611353073
				TV; TP	Basic screed, right			4611353074
					Screed extension, right	1.5 m		4611353095
					Screed extension, right	0.25 m		4611352948
					Screed extension, left	0.25 m		4611352947
					Screed extension, right	1.0 m		4611352550
					Screed extension, left	1.0 m		4611352549
					Screed extension, right	0.5 m		4611352327
					Screed extension, left	1.5 m		4611353094
AB 220	36AB	10 - 9999		TV	Extending screed, left; Extending screed, right			2339128
				TV	Screed extension, left; Screed extension, right	0.5 m		2374331
				TV	Screed extension, left; Screed extension, right	0.65 m		2376248
				TV	Basic screed, left; Basic screed, right			2339107
SB 300-3	07SB	10 - 9999		T	Screed extension, right	0.25 m		2247043
				HD	Screed extension, left	0.25 m		2626601
				HD	Screed extension, right	0.25 m		2626619
					Screed extension, left	0.5 m		2614251
					Screed extension, right	0.5 m		2619815
				HD	Screed extension, left + right	0.5 m		2621807

TAMPER BAR								
Series code	Serial code	Series range	Version	Screed version	Position	Extension	Please note	Part no.
SB 300-3	07SB	10 - 9999		TV; Telescoping	Screed extension, left	1.0 m		2576603
				TV; Telescoping	Screed extension, right	1.0 m		2576632
				HD	Screed extension, left + right	1.0 m		2581787
			"Dash 3" version	Telescoping	Screed extension, left	1.25 m		2202970
			"Dash 3" version	Telescoping	Screed extension, right	1.25 m		2203022
				TV; Telescoping	Screed extension, left	1.5 m		2576405
				TV; Telescoping	Screed extension, right	1.5 m		2576539
				T	Screed extension, left	0.25 m		2247041
				HD	Basic screen, left + right			2581729
				HD	Screed extension, left + right	1.5 m		2581815
				TV	Basic screed, right			2581688
				TV	Basic screed, left			2581298
SB 350-3	08SB	10 - 9999			Screed extension, right	0.5 m		2619815
					Screed extension, left	0.5 m		2614251
				T	Screed extension, right	0.25 m		2247043
				T	Screed extension, left	0.25 m		2247041
				TV	Basic screed, right			2597753
				TV	Basic screed, left			2597593
				TV; Telescoping	Screed extension, left	1.0 m		2576603
				TV; Telescoping	Screed extension, right	1.5 m		2576539
				TV; Telescoping	Screed extension, left	1.5 m		2576405
			"Dash 3" version	TV; Telescoping	Screed extension, right	1.25 m		2203022
			"Dash 3" version	TV; Telescoping	Screed extension, left	1.25 m		2202970
				TV; Telescoping	Screed extension, right	1.0 m		2576632

TAMPER BAR								
Series code	Serial code	Series range	Version	Screed version	Position	Extension	Please note	Part no.
SB 300-3	09SB	10 - 9999		TP	Basic screed, left			2581298
				TP	Basic screed, right			2581688
				TP; Telescoping	Screed extension, right	1.5 m		2576539
				TP; Telescoping	Screed extension, left	1.5 m		2576405
			"Dash 3" version	TP; Telescoping	Screed extension, right	1.25 m		2203022
			"Dash 3" version	TP; Telescoping	Screed extension, left	1.25 m		2202970
				TP; Telescoping	Screed extension, right	1.0 m		2576632
				TP; Telescoping	Screed extension, left	1.0 m		2576603
				TP	Screed extension, right	0.5 m		2619815
				TP	Screed extension, left	0.5 m		2614251
				TP	Screed extension, right	0.25 m		2247043
				TP	Screed extension, left	0.25 m		2247041
SB 350-3	10SB	10 - 9999		TP	Basic screed, left			2597593
				TP; Telescoping	Screed extension, left	1.0 m		2576603
				TP; Telescoping	Screed extension, right	1.0 m		2576632
			"Dash 3" version	TP; Telescoping	Screed extension, left	1.25 m		2202970
			"Dash 3" version	TP; Telescoping	Screed extension, right	1.25 m		2203022
				TP; Telescoping	Screed extension, right	1.5 m		2576539
				TP	Screed extension, right	0.5 m		2619815
				TP	Screed extension, left	0.5 m		2614251
				TP	Screed extension, right	0.25 m		2247043
				TP	Screed extension, left	0.25 m		2247041
				TP	Basic screed, right			2597753
				TP; Telescoping	Screed extension, left	1.5 m		2576405

TAMPER SHIELD

VÖGELE tamper shields are designed to direct the mix under the screed.

TAMPER SHIELD								
Series code	Serial code	Series range	Package includes	Screed version	Position	Extension	Version	Part no.
AB 200	12AB	10 - 331	complete (incl. spring steel strip)	TV	Basic screed, left			2024057
			complete (incl. spring steel strip)	TV	Basic screed, right			2024194
		10 - 546		V	Basic screed, right			2024496
				V	Screed extension, left	0.35 m		2028413
				V	Screed extension, right	0.35 m		2028521
				V	Basic screed, left			2024451
				V	Extending screed, left			2024387
				V	Extending screed, right			2024401
		10 - 9999	complete (incl. spring steel strip)	TV	Screed extension, left	0.35 m		2028280
			complete (incl. spring steel strip)	TV	Extending screed, right			2023994
			complete (incl. spring steel strip)	TV	Screed extension, left	0.6 m		2030895
			complete (incl. spring steel strip)	TV	Screed extension, right	0.6 m		2030910
				V	Screed extension, right	0.6 m		2059988
				V	Screed extension, left	0.6 m		2059991

TAMPER SHIELD

Series code	Serial code	Series range	Package includes	Screed version	Position	Extension	Version	Part no.
AB 200	12AB	10 - 9999	complete (incl. spring steel strip)	TV	Screed extension, right	0.35 m		2028493
			complete (incl. spring steel strip)	TV	Extending screed, left			2023966
		332 - 9999	complete (incl. spring steel strip)	TV	Basic screed, right			2049969
			complete (incl. spring steel strip)	TV	Basic screed, left			2049967
		547 - 9999		V	Screed extension, left	0.35 m		2060000
				V	Screed extension, right	0.35 m		2060027
				V	Extending screed, left			2060032
				V	Extending screed, right			2060045
				V	Basic screed, left			2060051
				V	Basic screed, right			2060054
AB 220-3	28AB	10 - 9999	complete (incl. spring steel strip)	TV	Basic screed, left			2339754
			complete (incl. spring steel strip)	TV	Basic screed, right			2339755
			complete (incl. spring steel strip)	TV	Extending screed, left			2340247
			complete (incl. spring steel strip)	TV	Extending screed, right			2340248
				V	Extending screed, left			2370845
				V	Screed extension, right	0.5 m		2375501
				V	Basic screed, left			2370881
				V	Basic screed, right			2371113

TAMPER SHIELD								
Series code	Serial code	Series range	Package includes	Screed version	Position	Extension	Version	Part no.
AB 220-3	28AB	10 - 9999	complete (incl. spring steel strip)	TV	Screed extension, left	0.5 m		2374813
			complete (incl. spring steel strip)	TV	Screed extension, right	0.5 m		2374892
				V	Screed extension, left	0.5 m		2375495
				V	Extending screed, right			2370847
AB 340	13AB	10 - 9999	complete (incl. spring steel strip)	TV	Extending screed, left			2044030
			complete (incl. spring steel strip)	TV	Extending screed, right			2044057
			complete (incl. spring steel strip)	TV	Basic screed, left			2044090
			complete (incl. spring steel strip)	TV	Basic screed, right			2044112
			complete (incl. spring steel strip)	TV	Screed extension, left	0.55 m		2047572
			complete (incl. spring steel strip)	TV	Screed extension, right	0.55 m		2047885
				V	Basic screed, left			2060956
			complete (incl. spring steel strip)	TV	Screed extension, right	0.4 m		2051343
				V	Extending screed, right			2060837
				V	Extending screed, left			2060856
				V	Screed extension, right	0.4 m		2060864
				V	Screed extension, left	0.4 m		2060871
				V	Basic screed, right			2060954

TAMPER SHIELD

Series code	Serial code	Series range	Package includes	Screed version	Position	Extension	Version	Part no.
AB 340	13AB	10 - 9999	complete (incl. spring steel strip)	TV	Screed extension, left	0.4 m		2051297
AB 340-3	27AB	10 - 9999	complete (incl. spring steel strip)	TV	Screed extension, left	0.55 m		2047572
			complete (incl. spring steel strip)	TV	Extending screed, right			2236392
			complete (incl. spring steel strip)	TV	Screed extension, left	0.8 m		2066902
			complete (incl. spring steel strip)	TV	Screed extension, right	0.8 m		2067040
				V	Basic screed, left			2095330
				V	Basic screed, right			2095343
				V	Extending screed, left			2095354
				V	Extending screed, right			2095363
			complete (incl. spring steel strip)	V	Screed extension, left	0.4 m		2135058
			complete (incl. spring steel strip)	V	Screed extension, right	0.4 m		2135172
			complete (incl. spring steel strip)	TV	Screed extension, left	0.25 m		2158539
			complete (incl. spring steel strip)	TV	Screed extension, right	0.25 m		2158763
			complete (incl. spring steel strip)	V	Screed extension, left	0.25 m		2183885
			complete (incl. spring steel strip)	V	Screed extension, right	0.25 m		2183889

TAMPER SHIELD								
Series code	Serial code	Series range	Package includes	Screed version	Position	Extension	Version	Part no.
AB 340-3	27AB	10 - 9999	complete (incl. spring steel strip)	TV	Basic screed, left			2235893
			complete (incl. spring steel strip)	TV	Basic screed, right			2236062
			complete (incl. spring steel strip)	TV	Extending screed, left			2236151
			complete (incl. spring steel strip)	TV	Screed extension, right	0.55 m		2047885
AB 480-3	29AB	10 - 9999	complete (incl. spring steel strip)	TV	Basic screed, left			2037329
			complete (incl. spring steel strip)	TV	Basic screed, right			2037330
			complete (incl. spring steel strip)	TV	Extending screed, left			2037331
			complete (incl. spring steel strip)	TV	Extending screed, right			2037332
			complete (incl. spring steel strip)	TV	Screed extension, left; Screed extension, right	1.25 m		2038065
			complete (incl. spring steel strip)	TV	Screed extension, right	0.6 m		2357756
			complete (incl. spring steel strip)	TV	Screed extension, right	0.25 m		2041071
			complete (incl. spring steel strip)	TV	Screed extension, left	0.75 m		2043402
			complete (incl. spring steel strip)	TV	Screed extension, right	0.75 m		2043403

TAMPER SHIELD

Series code	Serial code	Series range	Package includes	Screed version	Position	Extension	Version	Part no.
AB 480-3	29AB	10 - 9999	complete (incl. spring steel strip)	TV	Screed extension, left	0.6 m		2356708
			complete (incl. spring steel strip)	TV	Screed extension, left	0.25 m		2041070
AB 500	10AB	10 - 9999	complete (incl. spring steel strip)		Basic screed, left			4621300001
			complete (incl. spring steel strip)		Basic screed, right			4621300002
			complete (incl. spring steel strip)		Extending screed, left			4621300003
			complete (incl. spring steel strip)		Screed extension, left; Screed extension, right	1.25 m		4621300011
			complete (incl. spring steel strip)		Screed extension, left; Screed extension, right	0.75 m		4621300005
			complete (incl. spring steel strip)		Screed extension, left; Screed extension, right	0.225 m		4621300006
			complete (incl. spring steel strip)		Extending screed, right			4621300004
AB 500-2	14AB, 15AB	10 - 9999	complete (incl. spring steel strip)		Basic screed, left			2037329
			complete (incl. spring steel strip)		Basic screed, right			2037330
			complete (incl. spring steel strip)		Extending screed, left			2037331
			complete (incl. spring steel strip)		Extending screed, right			2037332

TAMPER SHIELD								
Series code	Serial code	Series range	Package includes	Screed version	Position	Extension	Version	Part no.
AB 500-2	14AB, 15AB	10 - 9999	complete (incl. spring steel strip)		Screed extension, right	0.75 m		2043403
			complete (incl. spring steel strip)		Screed extension, left	0.25 m		2041072
			complete (incl. spring steel strip)		Screed extension, right	0.25 m		2041073
			complete (incl. spring steel strip)		Screed extension, left	0.75 m		2043402
			complete (incl. spring steel strip)		Screed extension, left; Screed extension, right	1.25 m		2038065
AB 500-3	23AB	10 - 9999	complete (incl. spring steel strip)		Basic screed, left			2037329
			complete (incl. spring steel strip)		Basic screed, right			2037330
			complete (incl. spring steel strip)		Extending screed, left			2037331
			complete (incl. spring steel strip)		Extending screed, right			2037332
			complete (incl. spring steel strip)		Screed extension, right	0.75 m		2043403
			complete (incl. spring steel strip)		Screed extension, left	0.25 m		2041072
			complete (incl. spring steel strip)		Screed extension, right	0.25 m		2041073
			complete (incl. spring steel strip)		Screed extension, left	0.75 m		2043402

TAMPER SHIELD

Series code	Serial code	Series range	Package includes	Screed version	Position	Extension	Version	Part no.
AB 500-3	23AB	10 - 9999	complete (incl. spring steel strip)		Screed extension, left; Screed extension, right	1.25 m		2038065
	24AB	10 - 9999	complete (incl. spring steel strip)		Extending screed, right			2037332
			complete (incl. spring steel strip)		Screed extension, left; Screed extension, right	1.25 m		2038065
			complete (incl. spring steel strip)		Screed extension, left	0.25 m		2041072
			complete (incl. spring steel strip)		Screed extension, right	0.25 m		2041073
			complete (incl. spring steel strip)		Extending screed, left			2037331
			complete (incl. spring steel strip)		Screed extension, right	0.75 m		2043403
			complete (incl. spring steel strip)		Basic screed, left			2037329
			complete (incl. spring steel strip)		Basic screed, right			2037330
			complete (incl. spring steel strip)		Screed extension, left	0.75 m		2043402
AB 600	11AB	10 - 9999	complete (incl. spring steel strip)		Basic screed, right			4621300008
			complete (incl. spring steel strip)		Extending screed, left			4621300009
			complete (incl. spring steel strip)		Extending screed, right			4621300010

TAMPER SHIELD								
Series code	Serial code	Series range	Package includes	Screed version	Position	Extension	Version	Part no.
AB 600	11AB	10 - 9999	complete (incl. spring steel strip)		Screed extension, left; Screed extension, right	1.25 m		4621300011
			complete (incl. spring steel strip)		Screed extension, left; Screed extension, right	0.75 m		4621300005
			complete (incl. spring steel strip)		Screed extension, left; Screed extension, right	0.225 m		4621300006
			complete (incl. spring steel strip)		Basic screed, left			4621300007
AB 600-2	16AB, 17AB	10 - 9999	complete (incl. spring steel strip)		Screed extension, left; Screed extension, right	1.25 m		2038065
			complete (incl. spring steel strip)		Screed extension, left	0.25 m		2041072
			complete (incl. spring steel strip)		Screed extension, right	0.25 m		2041073
			complete (incl. spring steel strip)		Screed extension, left	0.75 m		2043402
			complete (incl. spring steel strip)		Extending screed, right			2052261
			complete (incl. spring steel strip)		Basic screed, left			2051960
			complete (incl. spring steel strip)		Basic screed, right			2052156
			complete (incl. spring steel strip)		Extending screed, left			2052239
			complete (incl. spring steel strip)		Screed extension, right	0.75 m		2043403

TAMPER SHIELD								
Series code	Serial code	Series range	Package includes	Screed version	Position	Extension	Version	Part no.
AB 600-3	25AB, 26AB	10 - 9999	complete (incl. spring steel strip)		Screed extension, left; Screed extension, right	1.25 m		2038065
			complete (incl. spring steel strip)		Screed extension, left	0.25 m		2041072
			complete (incl. spring steel strip)		Screed extension, right	0.25 m		2041073
			complete (incl. spring steel strip)		Screed extension, left	0.75 m		2043402
			complete (incl. spring steel strip)		Extending screed, right			2052261
			complete (incl. spring steel strip)		Basic screed, left			2051960
			complete (incl. spring steel strip)		Basic screed, right			2052156
			complete (incl. spring steel strip)		Extending screed, left			2052239
			complete (incl. spring steel strip)		Screed extension, right	0.75 m		2043403
VF 500-2	19AB	10 - 9999		V	Screed extension, left; Screed extension, right	0.305 m		2169597
				V	Screed extension, left; Screed extension, right	0.61 m		2171347
				V	Extending screed, right		no berm	2181090
				V	Basic screed, left		no berm	2180975
				V	Extending screed, left		no berm	2181087
				V	Basic screed, right		no berm	2180930

TAMPER SHIELD								
Series code	Serial code	Series range	Package includes	Screed version	Position	Extension	Version	Part no.
VF 600-2	20AB	10 - 9999		V	Basic screed, right		no berm	2143326
				V	Basic screed, left		no berm	2144092
				V	Screed extension, left; Screed extension, right	0.61 m		2171347
				V	Extending screed, left		no berm	2148567
				V	Screed extension, left; Screed extension, right	0.305 m		2169597
				V	Extending screed, right		no berm	2148545
VR 600-2	18AB	10 - 9999		V	Extending screed, left		no berm	2123232
				V	Screed extension, left	0.65 m		2124827
				V	Basic screed, right		no berm	2128690
				V	Extending screed, right		no berm	2127228
				V	Basic screed, left		no berm	2128686
				V	Screed extension, right	0.65 m		2126821
SB 250	02SB	10 - 275			Screed extension, right	0.25 m		4602433266
					Screed extension, left	0.25 m		4602433265
					Screed extension, left; Screed extension, right	1.5 m		4602433077
					Screed extension, left; Screed extension, right	1.0 m		4602433076
					Screed extension, left; Screed extension, right	0.5 m		4602433075
					Basic screed, left			4602433581
					Basic screed, right			4602433582
		276 - 436			Basic screed, left			4602434552
					Screed extension, right	0.25 m		4602434536

TAMPER SHIELD

Series code	Serial code	Series range	Package includes	Screed version	Position	Extension	Version	Part no.
SB 250	02SB	276 - 436			Screed extension, left	0.25 m		4602434535
					Screed extension, right	0.75 m	telescoping	4602432890
					Screed extension, left	0.75 m	telescoping	4602432889
					Basic screed, right			4602434553
					Screed extension, left; Screed extension, right	0.5 m		4602434561
					Screed extension, left; Screed extension, right	1.0 m		4602434560
					Screed extension, left; Screed extension, right	1.5 m		4602434559
		437 - 9999	complete (incl. spring steel strip)		Basic screed, left			2009720
			complete (incl. spring steel strip)		Screed extension, right	0.75 m	telescoping	2009732
			complete (incl. spring steel strip)		Basic screed, right			2009721
			complete (incl. spring steel strip)		Screed extension, left	0.25 m		2009724
			complete (incl. spring steel strip)		Screed extension, left	0.75 m	telescoping	2009731
			complete (incl. spring steel strip)		Screed extension, left; Screed extension, right	1.5 m		2009730
			complete (incl. spring steel strip)		Screed extension, left; Screed extension, right	1.0 m		2009729
			complete (incl. spring steel strip)		Screed extension, left; Screed extension, right	0.5 m		2009728

TAMPER SHIELD								
Series code	Serial code	Series range	Package includes	Screed version	Position	Extension	Version	Part no.
SB 250	02SB	437 - 9999	complete (incl. spring steel strip)		Screed extension, right	0.25 m		2009727
SB 250-2	05SB	10 - 9999	complete (incl. spring steel strip)		Basic screed, left			2124064
			complete (incl. spring steel strip)		Basic screed, right			2124367
			complete (incl. spring steel strip)		Screed extension, left; Screed extension, right	1.5 m		2125066
			complete (incl. spring steel strip)		Screed extension, left; Screed extension, right	1.0 m		2125276
			complete (incl. spring steel strip)		Screed extension, right	0.75 m	telescoping	2126211
			complete (incl. spring steel strip)		Screed extension, left	0.25 m		2125428
			complete (incl. spring steel strip)		Screed extension, right	0.25 m		2125557
			complete (incl. spring steel strip)		Screed extension, left	0.75 m	telescoping	2126020
			complete (incl. spring steel strip)		Screed extension, left; Screed extension, right	0.5 m		2125358
SB 300	03SB	10 - 331			Screed extension, left; Screed extension, right	1.5 m		4602433077
					Screed extension, left; Screed extension, right	1.0 m		4602433076
					Screed extension, left; Screed extension, right	0.5 m		4602433075

TAMPER SHIELD

Series code	Serial code	Series range	Package includes	Screed version	Position	Extension	Version	Part no.
SB 300	03SB	10 - 331			Basic screed, right			4602433055
					Basic screed, left			4602433054
					Screed extension, left	0.25 m		4602433265
					Screed extension, right	0.25 m		4602433266
		332 - 403			Basic screed, left			4602434557
					Screed extension, right	0.25 m		4602434536
					Screed extension, left	0.25 m		4602434535
					Screed extension, right	0.75 m	telescoping	4602432890
					Screed extension, left	0.75 m	telescoping	4602432889
					Basic screed, right			4602434558
					Screed extension, left; Screed extension, right	0.5 m		4602434561
					Screed extension, left; Screed extension, right	1.0 m		4602434560
					Screed extension, left; Screed extension, right	1.5 m		4602434559
		404 - 9999	complete (incl. spring steel strip)		Basic screed, left			2009722
			complete (incl. spring steel strip)		Basic screed, right			2009723
			complete (incl. spring steel strip)		Screed extension, left	0.25 m		2009724
			complete (incl. spring steel strip)		Screed extension, right	0.25 m		2009727
			complete (incl. spring steel strip)		Screed extension, right	0.75 m	telescoping	2009732

TAMPER SHIELD								
Series code	Serial code	Series range	Package includes	Screed version	Position	Extension	Version	Part no.
SB 300	03SB	404 - 9999	complete (incl. spring steel strip)		Screed extension, left	0.75 m	telescoping	2009731
			complete (incl. spring steel strip)		Screed extension, left; Screed extension, right	1.5 m		2009730
			complete (incl. spring steel strip)		Screed extension, left; Screed extension, right	1.0 m		2009729
			complete (incl. spring steel strip)		Screed extension, left; Screed extension, right	0.5 m		2009728
SB 300-2	06SB	10 - 9999	complete (incl. spring steel strip)		Basic screed, left			2124565
			complete (incl. spring steel strip)		Basic screed, right			2124916
			complete (incl. spring steel strip)		Screed extension, left; Screed extension, right	1.5 m		2125066
			complete (incl. spring steel strip)		Screed extension, left; Screed extension, right	1.0 m		2125276
			complete (incl. spring steel strip)		Screed extension, right	0.75 m	telescoping	2126211
			complete (incl. spring steel strip)		Screed extension, left	0.25 m		2125428
			complete (incl. spring steel strip)		Screed extension, right	0.25 m		2125557
			complete (incl. spring steel strip)		Screed extension, left	0.75 m	telescoping	2126020
			complete (incl. spring steel strip)		Screed extension, left; Screed extension, right	0.5 m		2125358

FEED OF MIX

High-quality paving results depend on the precise and uniform distribution of the mix across the entire working width. In order to meet the highest demands, VÖGELE pavers are equipped with the latest technologies for conveyance of mix and spreading of mix. After the material has been fed into the hopper, it conveys the material evenly in the direction of the augers, which perfectly spreads the mix.

> Read more online

PUSH ROLLERS

VÖGELE push rollers at the front of the paver withstand maximum loads.

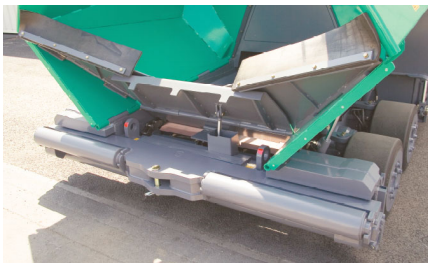

PUSH ROLLERS				
Series code	Serial code	Part	Requirement	Part no.
SUPER 700	0790	Bearing	4 pc.	2005836
		Tube	2 pc.	2005914
SUPER 700-3	0890	Bearing	4 pc.	2005836
		Tube	2 pc.	2005914

FEED OF MIX

PUSH ROLLERS				
Series code	Serial code	Part	Requirement	Part no.
SUPER 700-3i	0890	Bearing	4 pc.	2005836
		Tube	2 pc.	2005914
SUPER 800	0790	Bearing	4 pc.	2005836
		Tube	2 pc.	2005914
SUPER 800-3	0890	Bearing	4 pc.	2005836
		Tube	2 pc.	2005914
SUPER 800-3i	0890	Bearing	4 pc.	2005836
		Tube	2 pc.	2005914
SUPER 700	0990	Bearing	4 pc.	2005836
		Tube	2 pc.	2005914
SUPER 800	0990	Bearing	4 pc.	2005836
		Tube	2 pc.	2005914
SUPER 700i	0990	Bearing	4 pc.	2005836
		Tube	2 pc.	2005914
SUPER 800i	0990	Bearing	4 pc.	2005836
		Tube	2 pc.	2005914
SUPER 1100-2	0811	Bearing	4 pc.	2005836
		Tube	2 pc.	2005914
SUPER 1100-3	1011, 1411	Bearing	4 pc.	2005836
		Tube	2 pc.	2005914
SUPER 1100-3i	1011, 1411	Bearing	4 pc.	2005836
		Tube	2 pc.	2005914
SUPER 1103-2	0911	Bearing	4 pc.	2005836
		Tube	2 pc.	2005914
SUPER 1103-3	1111, 1511	Bearing	4 pc.	2005836
		Tube	2 pc.	2005914
SUPER 1103-3i	1111, 1511	Bearing	4 pc.	2005836

PUSH ROLLERS				
Series code	Serial code	Part	Requirement	Part no.
SUPER 1103-3i	1111, 1511	Tube	2 pc.	2005914
SUPER 1300-2	0811	Bearing	4 pc.	2005836
		Tube	2 pc.	2005914
SUPER 1300-3	1011, 1411	Bearing	4 pc.	2005836
		Tube	2 pc.	2005914
SUPER 1300-3i	1011, 1411	Bearing	4 pc.	2005836
		Tube	2 pc.	2005914
SUPER 1303-2	0911	Bearing	4 pc.	2005836
		Tube	2 pc.	2005914
SUPER 1303-3	1111, 1511	Bearing	4 pc.	2005836
		Tube	2 pc.	2005914
SUPER 1303-3i	1111, 1511	Bearing	4 pc.	2005836
		Tube	2 pc.	2005914
SUPER 1600-1	0782, 0982	Axle	2 pc.	4601032333
		Cover	4 pc.	4604132599
		Bearing	4 pc.	2240570
		Tube	2 pc.	4617305243
SUPER 1600-2	1182	Axle	2 pc.	2041091
		Cover	4 pc.	4604132599
		Bearing	4 pc.	2240570
		Tube	2 pc.	2040320
SUPER 1600-3	1582	Axle	2 pc.	2182538
		Cover	4 pc.	2182539
		Bearing	4 pc.	2240570
		Tube	2 pc.	2182537
SUPER 1600-3i	1582	Axle	2 pc.	2182538
		Cover	4 pc.	2182539

FEED OF MIX

PUSH ROLLERS				
Series code	Serial code	Part	Requirement	Part no.
SUPER 1600-3i	1582	Bearing	4 pc.	2240570
		Tube	2 pc.	2182537
SUPER 1603-1	0783	Axle	2 pc.	4601032333
		Cover	4 pc.	4604132599
		Bearing	4 pc.	2240570
		Tube	2 pc.	4617305243
SUPER 1603-2	0883	Axle	2 pc.	2041091
		Cover	4 pc.	4604132599
		Bearing	4 pc.	2240570
		Tube	2 pc.	2040320
SUPER 1603-3i	1183	Axle	2 pc.	2182538
		Cover	4 pc.	2182539
		Bearing	4 pc.	2240570
		Tube	2 pc.	2182537
SUPER 1603-3	1183	Axle	2 pc.	2182538
		Cover	4 pc.	2182539
		Bearing	4 pc.	2240570
		Tube	2 pc.	2182537
SUPER 1700-3	1982	Axle	2 pc.	2182538
		Cover	4 pc.	2182539
		Bearing	4 pc.	2240570
		Tube	2 pc.	2182537
SUPER 1700-3i	1982	Axle	2 pc.	2182538
		Cover	4 pc.	2182539
		Bearing	4 pc.	2240570
		Tube	2 pc.	2182537
SUPER 1703-3	1283	Axle	2 pc.	2182538

PUSH ROLLERS				
Series code	Serial code	Part	Requirement	Part no.
SUPER 1703-3	1283	Cover	4 pc.	2182539
		Bearing	4 pc.	2240570
		Tube	2 pc.	2182537
SUPER 1703-3i	1283	Axle	2 pc.	2182538
		Cover	4 pc.	2182539
		Bearing	4 pc.	2240570
		Tube	2 pc.	2182537
SUPER 1800-1	0782, 0982	Axle	2 pc.	4601032333
		Cover	4 pc.	4604132599
		Bearing	4 pc.	2240570
		Tube	2 pc.	4617305243
SUPER 1800-2	1182	Axle	2 pc.	2041091
		Cover	4 pc.	4604132599
		Bearing	4 pc.	2240570
		Tube	2 pc.	2040320
SUPER 1800-3	1482	Axle	2 pc.	2182538
		Cover	4 pc.	2182539
		Bearing	4 pc.	2240570
		Tube	2 pc.	2182537
SUPER 1800-3i	1482	Axle	2 pc.	2182538
		Cover	4 pc.	2182539
		Bearing	4 pc.	2240570
		Tube	2 pc.	2182537
SUPER 1803-1	0783	Axle	2 pc.	4601032333
		Cover	4 pc.	4604132599
		Bearing	4 pc.	2240570
		Tube	2 pc.	4617305243

FEED OF MIX

PUSH ROLLERS				
Series code	Serial code	Part	Requirement	Part no.
SUPER 1803-2	0883	Axle	2 pc.	2041091
		Cover	4 pc.	4604132599
		Bearing	4 pc.	2240570
		Tube	2 pc.	2040320
SUPER 1803-3	1083	Axle	2 pc.	2182538
		Cover	4 pc.	2182539
		Bearing	4 pc.	2240570
		Tube	2 pc.	2182537
SUPER 1803-3i	1083	Axle	2 pc.	2182538
		Cover	4 pc.	2182539
		Bearing	4 pc.	2240570
		Tube	2 pc.	2182537
SUPER 1900-2	0719	Axle	2 pc.	2041091
		Cover	4 pc.	4604132599
		Bearing	4 pc.	2240570
		Tube	2 pc.	2040320
SUPER 1900-3	0819	Axle	2 pc.	2182538
		Cover	4 pc.	2182539
		Bearing	4 pc.	2240570
		Tube	2 pc.	2182537
SUPER 1900-3i	0819	Axle	2 pc.	2182538
		Cover	4 pc.	2182539
		Bearing	4 pc.	2240570
		Tube	2 pc.	2182537
SUPER 2000-3	1174	Axle	2 pc.	2320960
		Cover	4 pc.	2182539
		Bearing	4 pc.	2240570

PUSH ROLLERS				
Series code	Serial code	Part	Requirement	Part no.
SUPER 2000-3	1174	Tube	2 pc.	2320937
SUPER 2000-3i	1174	Axle	2 pc.	2320960
		Cover	4 pc.	2182539
		Bearing	4 pc.	2240570
		Tube	2 pc.	2320937
SUPER 2003-3	0975	Axle	2 pc.	2320960
		Cover	4 pc.	2182539
		Bearing	4 pc.	2240570
		Tube	2 pc.	2320937
SUPER 2003-3i	0975	Axle	2 pc.	2320960
		Cover	4 pc.	2182539
		Bearing	4 pc.	2240570
		Tube	2 pc.	2320937
SUPER 2100-2	0719	Axle	2 pc.	2041091
		Cover	4 pc.	4604132599
		Bearing	4 pc.	2240570
		Tube	2 pc.	2040320
SUPER 2100-2 IP	0719	Axle	2 pc.	2041091
		Cover	4 pc.	4604132599
		Bearing	4 pc.	2240570
		Tube	2 pc.	2040320
SUPER 2100-3	0819	Axle	2 pc.	2182538
		Cover	4 pc.	2182539
		Bearing	4 pc.	2240570
		Tube	2 pc.	2182537
SUPER 2100-3i	0819	Axle	2 pc.	2182538
		Cover	4 pc.	2182539

PUSH ROLLERS				
Series code	Serial code	Part	Requirement	Part no.
SUPER 2100-3i	0819	Bearing	4 pc.	2240570
		Tube	2 pc.	2182537
SUPER 3000-2	0874	Axle	2 pc.	2118447
		Cover	4 pc.	2118449
		Bearings	4 pc.	2247046
		Tube	2 pc.	2118444
SUPER 3000-3	1074	Axle	2 pc.	2118447
		Cover	4 pc.	2118449
		Bearings	4 pc.	2247046
		Tube	2 pc.	2118444
SUPER 3000-3i	1074	Axle	2 pc.	2118447
		Cover	4 pc.	2118449
		Bearings	4 pc.	2247046
		Tube	2 pc.	2118444
SUPER 1800-2 SJ	1182	Axle	2 pc.	2041091
		Cover	4 pc.	4604132599
		Bearing	4 pc.	2240570
		Tube	2 pc.	2040320
SUPER 1800-3 SJ	1482	Axle	2 pc.	2182538
		Cover	4 pc.	2182539
		Bearing	4 pc.	2240570
		Tube	2 pc.	2182537
SUPER 1800-3i SJ	1482	Axle	2 pc.	2182538
		Cover	4 pc.	2182539
		Bearing	4 pc.	2240570
		Tube	2 pc.	2182537
MT 3000-2	0761	Axle	2 pc.	2145868

PUSH ROLLERS				
Series code	Serial code	Part	Requirement	Part no.
MT 3000-2	0761	Cover	4 pc.	4604132599
		Bearing	4 pc.	2240570
		Tube	2 pc.	2145859
MT 3000-3	0861	Axle	2 pc.	2145868
		Cover	4 pc.	4604132599
		Bearing	4 pc.	2240570
		Tube	2 pc.	2145859
MT 3000-3i	0861	Axle	2 pc.	2145868
		Cover	4 pc.	4604132599
		Bearing	4 pc.	2240570
		Tube	2 pc.	2145859

CONVEYOR

With the wide variety of genuine spare and wearing parts for the conveyor available from VÖGELE, you can replace the entire of the conveyance of mix system.

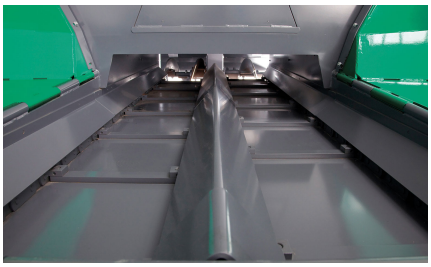

CONVEYOR						
Series code	Serial code	Part	Package content	Position	Require-ment	Part no.
SUPER 700	0790	Conveyor drive shaft		left	1 pc.	2086138
		Service package for con-veyor tracks	consisting of conveyor chains with conveyor bars		1 pc.	2045812
		Service package for con-veyor return rollers	consisting of return rollers with all bearings, wearing rings and locking rings		1 pc.	2037584
SUPER 700-3	0890	Conveyor drive shaft		left	1 pc.	2086138
		Service package for con-veyor tracks	consisting of conveyor chains with conveyor bars		1 pc.	2045812

CONVEYOR						
Series code	Serial code	Part	Package content	Position	Require-ment	Part no.
SUPER 700-3	0890	Service package for conveyor return rollers	consisting of return rollers with all bearings, wearing rings and locking rings		1 pc.	2037584
SUPER 700-3i	0890	Conveyor drive shaft		left	1 pc.	2086138
		Service package for conveyor tracks	consisting of conveyor chains with conveyor bars		1 pc.	2045812
		Service package for conveyor return rollers	consisting of return rollers with all bearings, wearing rings and locking rings		1 pc.	2037584
SUPER 800	0790	Conveyor drive shaft		left	1 pc.	2086138
		Service package for conveyor tracks	consisting of conveyor chains with conveyor bars		1 pc.	2045812
		Service package for conveyor return rollers	consisting of return rollers with all bearings, wearing rings and locking rings		1 pc.	2037584
SUPER 800-3	0890	Conveyor drive shaft		left	1 pc.	2086138
		Service package for conveyor tracks	consisting of conveyor chains with conveyor bars		1 pc.	2045812
		Service package for conveyor return rollers	consisting of return rollers with all bearings, wearing rings and locking rings		1 pc.	2037584
SUPER 800-3i	0890	Conveyor drive shaft		left	1 pc.	2086138
		Service package for conveyor tracks	consisting of conveyor chains with conveyor bars		1 pc.	2045812
		Service package for conveyor return rollers	consisting of return rollers with all bearings, wearing rings and locking rings		1 pc.	2037584
SUPER 700	0990	Scraper conveyor drive shaft			1 pc.	2440146
		Service package for conveyor tracks	consisting of conveyor chains with conveyor bars		1 pc.	2045812
		Service package for conveyor return rollers	consisting of return rollers with all bearings, wearing rings and locking rings		1 pc.	2037584
SUPER 800	0990	Scraper conveyor drive shaft			1 pc.	2440146
		Service package for conveyor tracks	consisting of conveyor chains with conveyor bars		1 pc.	2045812
		Service package for conveyor return rollers	consisting of return rollers with all bearings, wearing rings and locking rings		1 pc.	2037584

CONVEYOR						
Series code	Serial code	Part	Package content	Position	Requirement	Part no.
SUPER 700i	0990	Scraper conveyor drive shaft			1 pc.	2440146
		Service package for conveyor tracks	consisting of conveyor chains with conveyor bars		1 pc.	2045812
		Service package for conveyor return rollers	consisting of return rollers with all bearings, wearing rings and locking rings		1 pc.	2037584
SUPER 800i	0990	Scraper conveyor drive shaft			1 pc.	2440146
		Service package for conveyor tracks	consisting of conveyor chains with conveyor bars		1 pc.	2045812
		Service package for conveyor return rollers	consisting of return rollers with all bearings, wearing rings and locking rings		1 pc.	2037584
SUPER 1100-2	0811	Conveyor drive shaft		right	1 pc.	2085818
				left	1 pc.	2086230
		Service package for conveyor tracks	consisting of conveyor chains with conveyor bars		2 pc.	2046350
		Service package for conveyor return rollers	consisting of return rollers with all bearings, wearing rings and locking rings		1 pc.	2086375
SUPER 1100-3	1011	Conveyor drive shaft		left	1 pc.	2086230
				right	1 pc.	2085818
		Service package for conveyor tracks	consisting of conveyor chains with conveyor bars		2 pc.	2046350
		Service package for conveyor return rollers	consisting of return rollers with all bearings, wearing rings and locking rings		1 pc.	2086375
	1411	Conveyor drive shaft		right	1 pc.	2085818
				left	1 pc.	2086230
		Service package for conveyor tracks	consisting of conveyor chains with conveyor bars		2 pc.	2046350
		Service package for conveyor return rollers	consisting of return rollers with all bearings, wearing rings and locking rings		1 pc.	2086375
SUPER 1100-3i	1011, 1411	Conveyor drive shaft		right	1 pc.	2085818
				left	1 pc.	2086230
		Service package for conveyor tracks	consisting of conveyor chains with conveyor bars		2 pc.	2046350

CONVEYOR						
Series code	Serial code	Part	Package content	Position	Require-ment	Part no.
SUPER 1100-3i	1011, 1411	Service package for conveyor return rollers	consisting of return rollers with all bearings, wearing rings and locking rings		1 pc.	2086375
SUPER 1103-2	0911	Conveyor drive shaft		right	1 pc.	2086184
				left	1 pc.	2086201
		Service package for conveyor tracks	consisting of conveyor chains with conveyor bars		2 pc.	2052796
		Service package for conveyor return rollers	consisting of return rollers with all bearings, wearing rings and locking rings		1 pc.	2086375
SUPER 1103-3	1111, 1511	Service package for conveyor tracks	consisting of conveyor chains with conveyor bars		2 pc.	2052796
		Service package for conveyor return rollers	consisting of return rollers with all bearings, wearing rings and locking rings		1 pc.	2086375
SUPER 1103-3i	1111, 1511	Conveyor drive shaft		right	1 pc.	2086184
				left	1 pc.	2086201
		Service package for conveyor tracks	consisting of conveyor chains with conveyor bars		2 pc.	2052796
		Service package for conveyor return rollers	consisting of return rollers with all bearings, wearing rings and locking rings		1 pc.	2086375
SUPER 1300-2	0811	Conveyor drive shaft		right	1 pc.	2085818
				left	1 pc.	2086230
		Service package for conveyor tracks	consisting of conveyor chains with conveyor bars		2 pc.	2046350
		Service package for conveyor return rollers	consisting of return rollers with all bearings, wearing rings and locking rings		1 pc.	2086375
SUPER 1300-3	1011, 1411	Conveyor drive shaft		right	1 pc.	2085818
				left	1 pc.	2086230
		Service package for conveyor tracks	consisting of conveyor chains with conveyor bars		2 pc.	2046350
		Service package for conveyor return rollers	consisting of return rollers with all bearings, wearing rings and locking rings		1 pc.	2086375
SUPER 1300-3i	1011, 1411	Conveyor drive shaft		right	1 pc.	2085818

CONVEYOR						
Series code	Serial code	Part	Package content	Position	Requirement	Part no.
SUPER 1300-3i	1011, 1411	Conveyor drive shaft		left	1 pc.	2086230
		Service package for conveyor tracks	consisting of conveyor chains with conveyor bars		2 pc.	2046350
		Service package for conveyor return rollers	consisting of return rollers with all bearings, wearing rings and locking rings		1 pc.	2086375
SUPER 1303-2	0911	Conveyor drive shaft		right	1 pc.	2086184
				left	1 pc.	2086201
		Service package for conveyor tracks	consisting of conveyor chains with conveyor bars		2 pc.	2052796
		Service package for conveyor return rollers	consisting of return rollers with all bearings, wearing rings and locking rings		1 pc.	2086375
SUPER 1303-3	1111, 1511	Conveyor drive shaft		right	1 pc.	2086184
				left	1 pc.	2086201
		Service package for conveyor tracks	consisting of conveyor chains with conveyor bars		2 pc.	2052796
		Service package for conveyor return rollers	consisting of return rollers with all bearings, wearing rings and locking rings		1 pc.	2086375
SUPER 1303-3i	1111, 1511	Conveyor drive shaft		right	1 pc.	2086184
				left	1 pc.	2086201
		Service package for conveyor tracks	consisting of conveyor chains with conveyor bars		2 pc.	2052796
		Service package for conveyor return rollers	consisting of return rollers with all bearings, wearing rings and locking rings		1 pc.	2086375
SUPER 1600-1	0782	Conveyor drive shaft		left; right	2 pc.	4622082829
		Service package for conveyor tracks	consisting of conveyor chains with conveyor bars		2 pc.	2135839
		Service package for conveyor return rollers	consisting of return rollers with all bearings, wearing rings and locking rings		1 pc.	2013205
	0982	Conveyor drive shaft		left; right	2 pc.	4622082829
		Service package for conveyor tracks	consisting of conveyor chains with conveyor bars		2 pc.	2135839
SUPER 1600-2	1182	Conveyor drive shaft		left; right	2 pc.	4622082829

CONVEYOR						
Series code	Serial code	Part	Package content	Position	Require-ment	Part no.
SUPER 1600-2	1182	Service package for conveyor tracks	consisting of conveyor chains with conveyor bars		2 pc.	2135839
		Service package for conveyor return rollers	consisting of return rollers with all bearings, wearing rings and locking rings		1 pc.	2013205
SUPER 1600-3	1582	Conveyor drive shaft		left; right	2 pc.	4622082829
		Service package for conveyor tracks	consisting of conveyor chains with conveyor bars		2 pc.	2135838
		Service package for conveyor return rollers	consisting of return rollers with all bearings, wearing rings and locking rings		1 pc.	2013205
SUPER 1600-3i	1582	Conveyor drive shaft		left; right	2 pc.	4622082829
		Service package for conveyor tracks	consisting of conveyor chains with conveyor bars		2 pc.	2135838
		Service package for conveyor return rollers	consisting of return rollers with all bearings, wearing rings and locking rings		1 pc.	2013205
SUPER 1603-1	0783	Conveyor drive shaft		left; right	2 pc.	4622082829
		Service package for conveyor tracks	consisting of conveyor chains with conveyor bars		2 pc.	2135839
		Service package for conveyor return rollers	consisting of return rollers with all bearings, wearing rings and locking rings		1 pc.	2013205
SUPER 1603-2	0883	Conveyor drive shaft		left; right	2 pc.	4622082829
		Service package for conveyor tracks	consisting of conveyor chains with conveyor bars		2 pc.	2135839
		Service package for conveyor return rollers	consisting of return rollers with all bearings, wearing rings and locking rings		1 pc.	2013205
SUPER 1603-3i	1183	Conveyor drive shaft		left; right	2 pc.	4622082829
		Service package for conveyor tracks	consisting of conveyor chains with conveyor bars		2 pc.	2135839
		Service package for conveyor return rollers	consisting of return rollers with all bearings, wearing rings and locking rings		1 pc.	2013205
SUPER 1603-3	1183	Conveyor drive shaft		left; right	2 pc.	4622082829
		Service package for conveyor tracks	consisting of conveyor chains with conveyor bars		2 pc.	2135839

CONVEYOR						
Series code	Serial code	Part	Package content	Position	Require-ment	Part no.
SUPER 1603-3	1183	Service package for conveyor return rollers	consisting of return rollers with all bearings, wearing rings and locking rings		1 pc.	2013205
SUPER 1700-3	1982	Conveyor drive shaft		left; right	2 pc.	4622082829
		Service package for conveyor tracks	consisting of conveyor chains with conveyor bars		2 pc.	2135838
		Service package for conveyor return rollers	consisting of return rollers with all bearings, wearing rings and locking rings		1 pc.	2013205
SUPER 1700-3i	1982	Conveyor drive shaft		left; right	2 pc.	4622082829
		Service package for conveyor tracks	consisting of conveyor chains with conveyor bars		2 pc.	2135838
		Service package for conveyor return rollers	consisting of return rollers with all bearings, wearing rings and locking rings		1 pc.	2013205
SUPER 1703-3	1283	Conveyor drive shaft		left; right	2 pc.	4622082829
		Service package for conveyor tracks	consisting of conveyor chains with conveyor bars		2 pc.	2135839
		Service package for conveyor return rollers	consisting of return rollers with all bearings, wearing rings and locking rings		1 pc.	2013205
SUPER 1703-3i	1283	Conveyor drive shaft		left; right	2 pc.	4622082829
		Service package for conveyor tracks	consisting of conveyor chains with conveyor bars		2 pc.	2135839
		Service package for conveyor return rollers	consisting of return rollers with all bearings, wearing rings and locking rings		1 pc.	2013205
SUPER 1800-1	0782	Conveyor drive shaft		left; right	2 pc.	4622082829
		Service package for conveyor tracks	consisting of conveyor chains with conveyor bars		2 pc.	2135839
		Service package for conveyor return rollers	consisting of return rollers with all bearings, wearing rings and locking rings		1 pc.	2013205
	0982	Conveyor drive shaft		left; right	2 pc.	4622082829
		Service package for conveyor tracks	consisting of conveyor chains with conveyor bars		2 pc.	2135839
SUPER 1800-2	1182	Conveyor drive shaft		left; right	2 pc.	4622082829
		Service package for conveyor tracks	consisting of conveyor chains with conveyor bars		2 pc.	2135839

CONVEYOR						
Series code	Serial code	Part	Package content	Position	Require-ment	Part no.
SUPER 1800-2	1182	Service package for conveyor return rollers	consisting of return rollers with all bearings, wearing rings and locking rings		1 pc.	2013205
SUPER 1800-3	1482	Conveyor drive shaft		left; right	2 pc.	4622082829
		Service package for conveyor tracks	consisting of conveyor chains with conveyor bars		2 pc.	2135839
		Service package for conveyor return rollers	consisting of return rollers with all bearings, wearing rings and locking rings		1 pc.	2013205
SUPER 1800-3i	1482	Conveyor drive shaft		left; right	2 pc.	4622082829
		Service package for conveyor tracks	consisting of conveyor chains with conveyor bars		2 pc.	2135839
		Service package for conveyor return rollers	consisting of return rollers with all bearings, wearing rings and locking rings		1 pc.	2013205
SUPER 1803-1	0783	Conveyor drive shaft		left; right	2 pc.	4622082829
		Service package for conveyor tracks	consisting of conveyor chains with conveyor bars		2 pc.	2135839
		Service package for conveyor return rollers	consisting of return rollers with all bearings, wearing rings and locking rings		1 pc.	2013205
SUPER 1803-2	0883	Conveyor drive shaft		left; right	2 pc.	4622082829
		Service package for conveyor tracks	consisting of conveyor chains with conveyor bars		2 pc.	2135839
		Service package for conveyor return rollers	consisting of return rollers with all bearings, wearing rings and locking rings		1 pc.	2013205
SUPER 1803-3	1083	Conveyor drive shaft		left; right	2 pc.	4622082829
		Service package for conveyor tracks	consisting of conveyor chains with conveyor bars		2 pc.	2135839
		Service package for conveyor return rollers	consisting of return rollers with all bearings, wearing rings and locking rings		1 pc.	2013205
SUPER 1803-3i	1083	Conveyor drive shaft		left; right	2 pc.	4622082829
		Service package for conveyor tracks	consisting of conveyor chains with conveyor bars		2 pc.	2135839
		Service package for conveyor return rollers	consisting of return rollers with all bearings, wearing rings and locking rings		1 pc.	2013205

CONVEYOR						
Series code	Serial code	Part	Package content	Position	Requirement	Part no.
SUPER 1900-2	0719	Conveyor drive shaft		left; right	2 pc.	4622082826
		Service package for conveyor tracks	consisting of conveyor chains with conveyor bars		2 pc.	2135833
		Service package for conveyor return rollers	consisting of return rollers with all bearings, wearing rings and locking rings		1 pc.	2013205
SUPER 1900-3	0819	Conveyor drive shaft		left; right	2 pc.	4622082826
		Service package for conveyor tracks	consisting of conveyor chains with conveyor bars		2 pc.	2135833
		Service package for conveyor return rollers	consisting of return rollers with all bearings, wearing rings and locking rings		1 pc.	2013205
SUPER 1900-3i	0819	Conveyor drive shaft		left; right	2 pc.	4622082826
		Service package for conveyor tracks	consisting of conveyor chains with conveyor bars		2 pc.	2135833
		Service package for conveyor return rollers	consisting of return rollers with all bearings, wearing rings and locking rings		1 pc.	2013205
SUPER 2000-3	1174	Conveyor drive shaft		left; right	2 pc.	4622082826
		Service package for conveyor tracks	consisting of conveyor chains with conveyor bars		2 pc.	2135833
		Service package for conveyor return rollers	consisting of return rollers with all bearings, wearing rings and locking rings		1 pc.	2013205
SUPER 2000-3i	1174	Conveyor drive shaft		left; right	2 pc.	4622082826
		Service package for conveyor tracks	consisting of conveyor chains with conveyor bars		2 pc.	2135833
		Service package for conveyor return rollers	consisting of return rollers with all bearings, wearing rings and locking rings		1 pc.	2013205
SUPER 2003-3	0975	Conveyor drive shaft		left; right	2 pc.	4622082826
		Service package for conveyor tracks	consisting of conveyor chains with conveyor bars		2 pc.	2135833
		Service package for conveyor return rollers	consisting of return rollers with all bearings, wearing rings and locking rings		1 pc.	2013205
SUPER 2003-3i	0975	Conveyor drive shaft		left; right	2 pc.	4622082826
		Service package for conveyor tracks	consisting of conveyor chains with conveyor bars		2 pc.	2135833

FEED OF MIX

CONVEYOR						
Series code	Serial code	Part	Package content	Position	Require-ment	Part no.
SUPER 2003-3i	0975	Service package for conveyor return rollers	consisting of return rollers with all bearings, wearing rings and locking rings		1 pc.	2013205
SUPER 2100-2	0719	Conveyor drive shaft		left; right	2 pc.	4622082826
		Service package for conveyor tracks	consisting of conveyor chains with conveyor bars		2 pc.	2135833
		Service package for conveyor return rollers	consisting of return rollers with all bearings, wearing rings and locking rings		1 pc.	2013205
SUPER 2100-2 IP	0719	Conveyor drive shaft		left; right	2 pc.	4622082826
		Service package for conveyor tracks	consisting of conveyor chains with conveyor bars		2 pc.	2135833
		Service package for conveyor return rollers	consisting of return rollers with all bearings, wearing rings and locking rings		1 pc.	2013205
SUPER 2100-3	0819	Conveyor drive shaft		left; right	2 pc.	4622082826
		Service package for conveyor tracks	consisting of conveyor chains with conveyor bars		2 pc.	2135833
		Service package for conveyor return rollers	consisting of return rollers with all bearings, wearing rings and locking rings		1 pc.	2013205
SUPER 2100-3i	0819	Conveyor drive shaft		left; right	2 pc.	4622082826
		Service package for conveyor tracks	consisting of conveyor chains with conveyor bars		2 pc.	2135833
		Service package for conveyor return rollers	consisting of return rollers with all bearings, wearing rings and locking rings		1 pc.	2013205
SUPER 3000-2	0874	Scraper conveyor drive shaft		left; right	1 pc.	2118156
		Service package for conveyor tracks	consisting of conveyor chains with conveyor bars		2 pc.	2120082
		Service package for conveyor return rollers	consisting of return rollers with all bearings, wearing rings and locking rings		1 pc.	2013205
SUPER 3000-3	1074	Scraper conveyor drive shaft		left; right	1 pc.	2595158
		Service package for scraper conveyor chains			2 pc.	2595340
		Service package for conveyor return rollers	consisting of return rollers with all bearings, wearing rings and locking rings		1 pc.	2013205

CONVEYOR						
Series code	Serial code	Part	Package content	Position	Require-ment	Part no.
SUPER 3000-3i	1074	Scraper conveyor drive shaft		left; right	1 pc.	2595158
		Service package for scraper conveyor chains			2 pc.	2595340
		Service package for conveyor return rollers	consisting of return rollers with all bearings, wearing rings and locking rings		1 pc.	2013205
SUPER 1800-2 SJ	1182	Conveyor drive shaft		left; right	2 pc.	4622082829
		Service package for conveyor tracks	consisting of conveyor chains with conveyor bars		2 pc.	2135839
		Service package for conveyor return rollers	consisting of return rollers with all bearings, wearing rings and locking rings		1 pc.	2013205
SUPER 1800-3 SJ	1482	Conveyor drive shaft		left; right	2 pc.	4622082829
		Service package for conveyor tracks	consisting of conveyor chains with conveyor bars		2 pc.	2135839
		Service package for conveyor return rollers	consisting of return rollers with all bearings, wearing rings and locking rings		1 pc.	2013205
SUPER 1800-3i SJ	1482	Conveyor drive shaft		left; right	2 pc.	4622082829
		Service package for conveyor tracks	consisting of conveyor chains with conveyor bars		2 pc.	2135839
		Service package for conveyor return rollers	consisting of return rollers with all bearings, wearing rings and locking rings		1 pc.	2013205

Original VÖGELE

FEED OF MIX

MATERIAL HOPPER

Genuine VÖGELE material hopper rubbers prevent material from falling in front of the machine when filling the paver with asphalt. The material hopper service packages also include all the necessary wearing parts for fast and reliable maintenance.

MATERIAL HOPPER								
Series code	Serial code	Series range	Part	Version	Package content	Position	Re-quire-ment	Part no.
SUPER 700	0790	10 - 9999	Scraper rubber			left and right	2 pc.	2025844
			Rubber	only with asymmet-ric hopper		left	1 pc.	2027092
			Service package for mater-ial hop-pers	with mechan-ical front flap	consisting of floor plates, conveyor cov-ers, mounting mater-ial			2085994
SUPER 700-3	0890	10 - 9999	Scraper rubber			left and right	2 pc.	2379941
			Rubber	only with asymmet-ric hopper		left	1 pc.	2396068
			Service package for mater-ial hop-pers	with mechan-ical front flap	consisting of floor plates, conveyor cov-ers, mounting mater-ial			2085994
SUPER 700-3i	0890	10 - 9999	Scraper rubber			left and right	2 pc.	2379941
			Rubber	only with asymmet-ric hopper		left	1 pc.	2396068
			Service package for mater-ial hop-pers	with mechan-ical front flap	consisting of floor plates, conveyor cov-ers, mounting mater-ial			2085994
SUPER 800	0790	10 - 9999	Scraper rubber			left and right	2 pc.	2025844

MATERIAL HOPPER

Series code	Serial code	Series range	Part	Version	Package content	Position	Requirement	Part no.
SUPER 800	0790	10 - 9999	Rubber	only with asymmetric hopper		left	1 pc.	2027092
			Service package for material hoppers	with mechanical front flap	consisting of floor plates, conveyor covers, mounting material			2085994
SUPER 800-3	0890	10 - 9999	Scraper rubber			left and right	2 pc.	2379941
			Rubber	only with asymmetric hopper		left	1 pc.	2396068
			Service package for material hoppers	with mechanical front flap	consisting of floor plates, conveyor covers, mounting material			2085994
SUPER 800-3i	0890	10 - 9999	Scraper rubber			left and right	2 pc.	2379941
			Rubber	only with asymmetric hopper		left	1 pc.	2396068
			Service package for material hoppers	with mechanical front flap	consisting of floor plates, conveyor covers, mounting material			2085994
SUPER 700	0990	10 - 9999	Scraper rubber			left and right	2 pc.	2379941
			Rubber	only with asymmetric hopper		left	1 pc.	2396068
			Service package for material hoppers	with mechanical front flap	consisting of floor plates, conveyor covers, mounting material			2085994
SUPER 800	0990	10 - 9999	Scraper rubber			left and right	2 pc.	2379941
			Rubber	only with asymmetric hopper		left	1 pc.	2396068

FEED OF MIX

MATERIAL HOPPER								
Series code	Serial code	Series range	Part	Version	Package content	Position	Requirement	Part no.
SUPER 800	0990	10 - 9999	Service package for material hoppers	with mechanical front flap	consisting of floor plates, conveyor covers, mounting material			2085994
SUPER 700i	0990	10 - 9999	Scraper rubber			left and right	2 pc.	2379941
			Rubber	only with asymmetric hopper		left	1 pc.	2396068
			Service package for material hoppers	with mechanical front flap	consisting of floor plates, conveyor covers, mounting material			2085994
SUPER 800i	0990	10 - 9999	Scraper rubber			left and right	2 pc.	2379941
			Rubber	only with asymmetric hopper		left	1 pc.	2396068
			Service package for material hoppers	with mechanical front flap	consisting of floor plates, conveyor covers, mounting material			2085994
SUPER 1100-2	0811	10 - 9999	Scraper rubber			left and right	2 pc.	2048231
				only with mechanical inlet flap		Centre	1 pc.	2048234
				with hydraulic inlet flap		left and right	2 pc.	2067845
			Service package for material hoppers	with mechanical front flap	consisting of floor plates, conveyor covers, mounting material			2084782
SUPER 1100-3	1011	10 - 67	Service package for material hoppers	with mechanical front flap	consisting of floor plates, conveyor covers, mounting material			2084782

MATERIAL HOPPER

Series code	Serial code	Series range	Part	Version	Package content	Position	Requirement	Part no.
SUPER 1100-3	1011	10 - 9999	Scraper rubber			left and right	2 pc.	2048231
				only with mechanical inlet flap		Centre	1 pc.	2048234
				with hydraulic inlet flap		left and right	2 pc.	2067845
		68 - 127	Service package for material hoppers	with mechanical front flap	consisting of floor plates, conveyor covers, mounting material			2401558
		128 - 9999	Service package for material hoppers	with mechanical front flap	consisting of floor plates, conveyor covers, mounting material			2392233
	1411	10 - 9999	Scraper rubber			left and right	2 pc.	2048231
				only with mechanical inlet flap		Centre	1 pc.	2048234
				with hydraulic inlet flap		left and right	2 pc.	2067845
			Service package for material hoppers	with mechanical front flap	consisting of floor plates, conveyor covers, mounting material			2392183
SUPER 1100-3i	1011	10 - 67	Service package for material hoppers	with mechanical front flap	consisting of floor plates, conveyor covers, mounting material			2084782
		10 - 9999	Scraper rubber			left and right	2 pc.	2048231
				only with mechanical inlet flap		Centre	1 pc.	2048234

FEED OF MIX

MATERIAL HOPPER								
Series code	Serial code	Series range	Part	Version	Package content	Position	Re-quire-ment	Part no.
SUPER 1100-3i	1011	10 - 9999	Scraper rubber	with hydraulic inlet flap		left and right	2 pc.	2067845
		68 - 127	Service package for material hoppers	with mechanical front flap	consisting of floor plates, conveyor covers, mounting material			2401558
		128 - 9999	Service package for material hoppers	with mechanical front flap	consisting of floor plates, conveyor covers, mounting material			2392233
	1411	10 - 9999	Scraper rubber			left and right	2 pc.	2048231
				only with mechanical inlet flap		Centre	1 pc.	2048234
				with hydraulic inlet flap		left and right	2 pc.	2067845
			Service package for material hoppers	with mechanical front flap	consisting of floor plates, conveyor covers, mounting material			2392183
SUPER 1103-2	0911	10 - 9999	Scraper rubber			left and right	2 pc.	2048231
				only with mechanical inlet flap		Centre	1 pc.	2052454
				with hydraulic inlet flap		left and right	2 pc.	2067845
			Service package for material hoppers	with mechanical front flap	consisting of floor plates, conveyor covers, mounting material			2085982

MATERIAL HOPPER								
Series code	Serial code	Series range	Part	Version	Package content	Position	Requirement	Part no.
SUPER 1103-3	1111	10 - 124	Service package for material hoppers	with mechanical front flap	consisting of floor plates, conveyor covers, mounting material			2085982
		10 - 9999	Scraper rubber			left and right	2 pc.	2048231
				only with mechanical inlet flap		Centre	1 pc.	2048234
				with hydraulic inlet flap		left and right	2 pc.	2067845
		125 - 9999	Service package for material hoppers	with mechanical front flap	consisting of floor plates, conveyor covers, mounting material			2392183
	1511	10 - 9999	Scraper rubber			left and right	2 pc.	2048231
				only with mechanical inlet flap		Centre	1 pc.	2048234
				with hydraulic inlet flap		left and right	2 pc.	2067845
			Service package for material hoppers	with mechanical front flap	consisting of floor plates, conveyor covers, mounting material			2392183
SUPER 1103-3i	1111	10 - 124	Service package for material hoppers	with mechanical front flap	consisting of floor plates, conveyor covers, mounting material			2085982
		10 - 9999	Scraper rubber			left and right	2 pc.	2048231
				only with mechanical inlet flap		Centre	1 pc.	2048234

FEED OF MIX

MATERIAL HOPPER								
Series code	Serial code	Series range	Part	Version	Package content	Position	Requirement	Part no.
SUPER 1103-3i	1111	10 - 9999	Scraper rubber	with hydraulic inlet flap		left and right	2 pc.	2067845
		125 - 9999	Service package for material hoppers	with mechanical front flap	consisting of floor plates, conveyor covers, mounting material			2392183
	1511	10 - 9999	Scraper rubber	with hydraulic inlet flap		left and right	2 pc.	2067845
				only with mechanical inlet flap		Centre	1 pc.	2048234
						left and right	2 pc.	2048231
			Service package for material hoppers	with mechanical front flap	consisting of floor plates, conveyor covers, mounting material			2392183
SUPER 1300-2	0811	10 - 9999	Scraper rubber			left and right	2 pc.	2048231
				only with mechanical inlet flap		Centre	1 pc.	2048234
				with hydraulic inlet flap		left and right	2 pc.	2067845
			Service package for material hoppers	with mechanical front flap	consisting of floor plates, conveyor covers, mounting material			2084782
SUPER 1300-3	1011	10 - 67	Service package for material hoppers	with mechanical front flap	consisting of floor plates, conveyor covers, mounting material			2084782
		10 - 9999	Scraper rubber			left and right	2 pc.	2048231

MATERIAL HOPPER								
Series code	Serial code	Series range	Part	Version	Package content	Position	Requirement	Part no.
SUPER 1300-3	1011	10 - 9999	Scraper rubber	only with mechanical inlet flap		Centre	1 pc.	2048234
				with hydraulic inlet flap		left and right	2 pc.	2067845
		68 - 127	Service package for material hoppers	with mechanical front flap	consisting of floor plates, conveyor covers, mounting material			2401558
		128 - 9999	Service package for material hoppers	with mechanical front flap	consisting of floor plates, conveyor covers, mounting material			2392233
	1411	10 - 9999	Scraper rubber			left and right	2 pc.	2048231
				only with mechanical inlet flap		Centre	1 pc.	2048234
				with hydraulic inlet flap		left and right	2 pc.	2067845
			Service package for material hoppers	with mechanical front flap	consisting of floor plates, conveyor covers, mounting material			2392183
SUPER 1300-3i	1011	10 - 67	Service package for material hoppers	with mechanical front flap	consisting of floor plates, conveyor covers, mounting material			2084782
		10 - 9999	Scraper rubber			left and right	2 pc.	2048231
				only with mechanical inlet flap		Centre	1 pc.	2048234
				with hydraulic inlet flap		left and right	2 pc.	2067845

MATERIAL HOPPER								
Series code	Serial code	Series range	Part	Version	Package content	Position	Re-quire-ment	Part no.
SUPER 1300-3i	1011	68 - 127	Service package for material hoppers	with mechanical front flap	consisting of floor plates, conveyor covers, mounting material			2401558
		128 - 9999	Service package for material hoppers	with mechanical front flap	consisting of floor plates, conveyor covers, mounting material			2392233
	1411	10 - 9999	Scraper rubber			left and right	2 pc.	2048231
				only with mechanical inlet flap		Centre	1 pc.	2048234
				with hydraulic inlet flap		left and right	2 pc.	2067845
			Service package for material hoppers	with mechanical front flap	consisting of floor plates, conveyor covers, mounting material			2392183
SUPER 1303-2	0911	10 - 9999	Scraper rubber			left and right	2 pc.	2048231
				only with mechanical inlet flap		Centre	1 pc.	2052454
				with hydraulic inlet flap		left and right	2 pc.	2067845
			Service package for material hoppers	with mechanical front flap	consisting of floor plates, conveyor covers, mounting material			2085982
SUPER 1303-3	1111	10 - 124	Service package for material hoppers	with mechanical front flap	consisting of floor plates, conveyor covers, mounting material			2085982
		10 - 9999	Scraper rubber			left and right	2 pc.	2048231

MATERIAL HOPPER								
Series code	Serial code	Series range	Part	Version	Package content	Position	Re-quire-ment	Part no.
SUPER 1303-3	1111	10 - 9999	Scraper rubber	only with mechan-ical inlet flap		Centre	1 pc.	2048234
				with hy-draulic in-let flap		left and right	2 pc.	2067845
		125 - 9999	Service package for mater-ial hop-pers	with mechan-ical front flap	consisting of floor plates, conveyor cov-ers, mounting mater-ial			2392183
	1511	10 - 9999	Scraper rubber			left and right	2 pc.	2048231
				only with mechan-ical inlet flap		Centre	1 pc.	2048234
				with hy-draulic in-let flap		left and right	2 pc.	2067845
			Service package for mater-ial hop-pers	with mechan-ical front flap	consisting of floor plates, conveyor cov-ers, mounting mater-ial			2392183
SUPER 1303-3i	1111	10 - 124	Service package for mater-ial hop-pers	with mechan-ical front flap	consisting of floor plates, conveyor cov-ers, mounting mater-ial			2085982
		10 - 9999	Scraper rubber			left and right	2 pc.	2048231
				only with mechan-ical inlet flap		Centre	1 pc.	2048234
				with hy-draulic in-let flap		left and right	2 pc.	2067845
		125 - 9999	Service package for mater-ial hop-pers	with mechan-ical front flap	consisting of floor plates, conveyor cov-ers, mounting mater-ial			2392183

MATERIAL HOPPER								
Series code	Serial code	Series range	Part	Version	Package content	Position	Requirement	Part no.
SUPER 1303-3i	1511	10 - 9999	Scraper rubber			left and right	2 pc.	2048231
				only with mechanical inlet flap		Centre	1 pc.	2048234
				with hydraulic inlet flap		left and right	2 pc.	2067845
			Service package for material hoppers	with mechanical front flap	consisting of floor plates, conveyor covers, mounting material			2392183
SUPER 1600-1	0782, 0982	10 - 25	Service package for material hoppers	with mechanical front flap	consisting of floor plates, conveyor covers, mounting material			2013187
				with hydraulic front flap	consisting of floor plates, conveyor covers, mounting material			2013188
		10 - 9999	Scraper rubber			left and right	2 pc.	4601112253
				only with mechanical inlet flap		Centre	1 pc.	4601112254
		26 - 9999	Service package for material hoppers	with mechanical front flap	consisting of floor plates, conveyor covers, mounting material			2031619
				with hydraulic front flap	consisting of floor plates, conveyor covers, mounting material			2031620
SUPER 1600-2	1182	10 - 9999	Scraper rubber			left and right	2 pc.	4601112253
				only with mechanical inlet flap		Centre	1 pc.	4601112254
			Service package for material hoppers	with mechanical front flap	consisting of floor plates, conveyor covers, mounting material			2031619
				with hydraulic front flap	consisting of floor plates, conveyor covers, mounting material			2031620

MATERIAL HOPPER								
Series code	Serial code	Series range	Part	Version	Package content	Position	Requirement	Part no.
SUPER 1600-3	1582	10 - 9999	Scraper rubber	with hydraulic inlet flap		Centre	1 pc.	2267686
				with hydraulic inlet flap		left and right	2 pc.	2267692
				only with mechanical inlet flap		Centre	1 pc.	4601112254
				only with mechanical inlet flap		left and right	2 pc.	2267786
			Service package for material hoppers	with hydraulic front flap	consisting of floor plates, conveyor covers, mounting material			2368957
				with mechanical front flap	consisting of floor plates, conveyor covers, mounting material			2368951
SUPER 1600-3i	1582	10 - 9999	Scraper rubber	with hydraulic inlet flap		Centre	1 pc.	2267686
				with hydraulic inlet flap		left and right	2 pc.	2267692
				only with mechanical inlet flap		Centre	1 pc.	4601112254
				only with mechanical inlet flap		left and right	2 pc.	2267786
			Service package for material hoppers	with hydraulic front flap	consisting of floor plates, conveyor covers, mounting material			2368957
				with mechanical front flap	consisting of floor plates, conveyor covers, mounting material			2368951

FEED OF MIX

MATERIAL HOPPER								
Series code	Serial code	Series range	Part	Version	Package content	Position	Re-quire-ment	Part no.
SUPER 1603-1	0783	10 - 18	Service package for material hoppers	with mechanical front flap	consisting of floor plates, conveyor covers, mounting material			2013187
				with hydraulic front flap	consisting of floor plates, conveyor covers, mounting material			2013188
		10 - 9999	Scraper rubber			left and right	2 pc.	4601112253
				only with mechanical inlet flap		Centre	1 pc.	4601112254
		19 - 9999	Service package for material hoppers	with mechanical front flap	consisting of floor plates, conveyor covers, mounting material			2031619
				with hydraulic front flap	consisting of floor plates, conveyor covers, mounting material			2031620
SUPER 1603-2	0883	10 - 9999	Scraper rubber			left and right	2 pc.	4601112253
				only with mechanical inlet flap		Centre	1 pc.	4601112254
			Service package for material hoppers	with mechanical front flap	consisting of floor plates, conveyor covers, mounting material			2031619
				with hydraulic front flap	consisting of floor plates, conveyor covers, mounting material			2031620
SUPER 1603-3i	1183	10 - 9999	Scraper rubber	with hydraulic inlet flap		Centre	1 pc.	2267686
				only with mechanical inlet flap		Centre	1 pc.	4601112254
				only with mechanical inlet flap		left and right	2 pc.	2267786
				with hydraulic inlet flap		left and right	2 pc.	2267692

MATERIAL HOPPER								
Series code	Serial code	Series range	Part	Version	Package content	Position	Requirement	Part no.
SUPER 1603-3i	1183	10 - 9999	Service package for material hoppers	with mechanical front flap	consisting of floor plates, conveyor covers, mounting material			2369420
				with hydraulic front flap	consisting of floor plates, conveyor covers, mounting material			2369421
SUPER 1603-3	1183	10 - 9999	Scraper rubber	with hydraulic inlet flap		Centre	1 pc.	2267686
				with hydraulic inlet flap		left and right	2 pc.	2267692
				only with mechanical inlet flap		Centre	1 pc.	4601112254
				only with mechanical inlet flap		left and right	2 pc.	2267786
			Service package for material hoppers	with hydraulic front flap	consisting of floor plates, conveyor covers, mounting material			2369421
				with mechanical front flap	consisting of floor plates, conveyor covers, mounting material			2369420
SUPER 1700-3	1982	10 - 9999	Scraper rubber	with hydraulic inlet flap		Centre	1 pc.	2267686
				with hydraulic inlet flap		left and right	2 pc.	2410922
			Service package for material hoppers	with hydraulic front flap	consisting of floor plates, conveyor covers, mounting material			2368957
SUPER 1700-3i	1982	10 - 9999	Scraper rubber	with hydraulic inlet flap		Centre	1 pc.	2267686

MATERIAL HOPPER								
Series code	Serial code	Series range	Part	Version	Package content	Position	Requirement	Part no.
SUPER 1700-3i	1982	10 - 9999	Scraper rubber	with hydraulic inlet flap		left and right	2 pc.	2410922
			Service package for material hoppers	with hydraulic front flap	consisting of floor plates, conveyor covers, mounting material			2368957
SUPER 1703-3	1283	10 - 9999	Scraper rubber	with hydraulic inlet flap		Centre	1 pc.	2267686
				with hydraulic inlet flap		left and right	2 pc.	2410922
			Service package for material hoppers	with hydraulic front flap	consisting of floor plates, conveyor covers, mounting material			2369421
SUPER 1703-3i	1283	10 - 9999	Scraper rubber	with hydraulic inlet flap		Centre	1 pc.	2267686
				with hydraulic inlet flap		left and right	2 pc.	2410922
			Service package for material hoppers	with hydraulic front flap	consisting of floor plates, conveyor covers, mounting material			2369421
SUPER 1800-1	0782, 0982	10 - 25	Service package for material hoppers	with mechanical front flap	consisting of floor plates, conveyor covers, mounting material			2013187
				with hydraulic front flap	consisting of floor plates, conveyor covers, mounting material			2013188
		10 - 9999	Scraper rubber			left and right	2 pc.	4601112253
				only with mechanical inlet flap		Centre	1 pc.	4601112254

MATERIAL HOPPER								
Series code	Serial code	Series range	Part	Version	Package content	Position	Requirement	Part no.
SUPER 1800-1	0782, 0982	26 - 9999	Service package for material hoppers	with mechanical front flap	consisting of floor plates, conveyor covers, mounting material			2031619
				with hydraulic front flap	consisting of floor plates, conveyor covers, mounting material			2031620
SUPER 1800-2	1182	10 - 9999	Scraper rubber			left and right	2 pc.	4601112253
				only with mechanical inlet flap		Centre	1 pc.	4601112254
			Service package for material hoppers	with mechanical front flap	consisting of floor plates, conveyor covers, mounting material			2031619
				with hydraulic front flap	consisting of floor plates, conveyor covers, mounting material			2031620
SUPER 1800-3	1482	10 - 9999	Scraper rubber	with hydraulic inlet flap		Centre	1 pc.	2267686
				only with mechanical inlet flap		Centre	1 pc.	4601112254
				only with mechanical inlet flap		left and right	2 pc.	2267786
				with hydraulic inlet flap		left and right	2 pc.	2267692
SUPER 1800-3i	1482	10 - 9999	Scraper rubber	with hydraulic inlet flap		Centre	1 pc.	2267686
				only with mechanical inlet flap		Centre	1 pc.	4601112254
				only with mechanical inlet flap		left and right	2 pc.	2267786

FEED OF MIX

MATERIAL HOPPER								
Series code	Serial code	Series range	Part	Version	Package content	Position	Requirement	Part no.
SUPER 1800-3i	1482	10 - 9999	Scraper rubber	with hydraulic inlet flap		left and right	2 pc.	2267692
SUPER 1803-1	0783	10 - 18	Service package for material hoppers	with mechanical front flap	consisting of floor plates, conveyor covers, mounting material			2013187
				with hydraulic front flap	consisting of floor plates, conveyor covers, mounting material			2013188
		10 - 9999	Scraper rubber			left and right	2 pc.	4601112253
				only with mechanical inlet flap		Centre	1 pc.	4601112254
		19 - 9999	Service package for material hoppers	with mechanical front flap	consisting of floor plates, conveyor covers, mounting material			2031619
				with hydraulic front flap	consisting of floor plates, conveyor covers, mounting material			2031620
SUPER 1803-2	0883	10 - 9999	Scraper rubber			left and right	2 pc.	4601112253
				only with mechanical inlet flap		Centre	1 pc.	4601112254
			Service package for material hoppers	with mechanical front flap	consisting of floor plates, conveyor covers, mounting material			2031619
				with hydraulic front flap	consisting of floor plates, conveyor covers, mounting material			2031620
SUPER 1803-3	1083	10 - 9999	Scraper rubber	with hydraulic inlet flap		Centre	1 pc.	2267686
				with hydraulic inlet flap		left and right	2 pc.	2267692
				only with mechanical inlet flap		Centre	1 pc.	4601112254

MATERIAL HOPPER								
Series code	Serial code	Series range	Part	Version	Package content	Position	Requirement	Part no.
SUPER 1803-3	1083	10 - 9999	Scraper rubber	only with mechanical inlet flap		left and right	2 pc.	2267786
			Service package for material hoppers	with hydraulic front flap	consisting of floor plates, conveyor covers, mounting material			2355960
				with mechanical front flap	consisting of floor plates, conveyor covers, mounting material			2355880
SUPER 1803-3i	1083	10 - 9999	Scraper rubber	with hydraulic inlet flap		Centre	1 pc.	2267686
				with hydraulic inlet flap		left and right	2 pc.	2267692
				only with mechanical inlet flap		Centre	1 pc.	4601112254
				only with mechanical inlet flap		left and right	2 pc.	2267786
			Service package for material hoppers	with hydraulic front flap	consisting of floor plates, conveyor covers, mounting material			2355960
				with mechanical front flap	consisting of floor plates, conveyor covers, mounting material			2355880
SUPER 1900-2	0719	10 - 9999	Scraper rubber			left and right	2 pc.	4601112202
				only with mechanical inlet flap		Centre	1 pc.	4601112215
			Service package for material hoppers	with hydraulic front flap	consisting of floor plates, conveyor covers, mounting material			2041452
				with mechanical front flap	consisting of floor plates, conveyor covers, mounting material			2041453

FEED OF MIX

MATERIAL HOPPER								
Series code	Serial code	Series range	Part	Version	Package content	Position	Re-quire-ment	Part no.
SUPER 1900-3	0819	10 - 9999	Scraper rubber	only with mechan-ical inlet flap		left and right	2 pc.	2183421
				with hy-draulic in-let flap		Centre	1 pc.	2212906
				only with mechan-ical inlet flap		Centre	1 pc.	4601112215
				with hy-draulic in-let flap		left and right	2 pc.	2213268
			Service package for mater-ial hop-pers	with hy-draulic front flap	consisting of floor plates, conveyor cov-ers, mounting mater-ial			2269373
				with mechan-ical front flap	consisting of floor plates, conveyor cov-ers, mounting mater-ial			2269356
SUPER 1900-3i	0819	10 - 9999	Scraper rubber	only with mechan-ical inlet flap		left and right	2 pc.	2183421
				with hy-draulic in-let flap		Centre	1 pc.	2212906
				only with mechan-ical inlet flap		Centre	1 pc.	4601112215
				with hy-draulic in-let flap		left and right	2 pc.	2213268
			Service package for mater-ial hop-pers	with hy-draulic front flap	consisting of floor plates, conveyor cov-ers, mounting mater-ial			2269373
				with mechan-ical front flap	consisting of floor plates, conveyor cov-ers, mounting mater-ial			2269356
SUPER 2000-3	1174	10 - 9999	Scraper rubber	with hy-draulic in-let flap		Centre	1 pc.	2212906

MATERIAL HOPPER								
Series code	Serial code	Series range	Part	Version	Package content	Position	Requirement	Part no.
SUPER 2000-3	1174	10 - 9999	Scraper rubber			left and right	2 pc.	2427961
			Service package for material hoppers	with hydraulic front flap	consisting of floor plates, conveyor covers, mounting material			2446062
SUPER 2000-3i	1174	10 - 9999	Scraper rubber	with hydraulic inlet flap		Centre	1 pc.	2212906
						left and right	2 pc.	2427961
			Service package for material hoppers	with hydraulic front flap	consisting of floor plates, conveyor covers, mounting material			2446062
SUPER 2003-3	0975	10 - 9999	Scraper rubber	with hydraulic inlet flap		Centre	1 pc.	2212906
						left and right	2 pc.	2427961
			Service package for material hoppers	with hydraulic front flap	consisting of floor plates, conveyor covers, mounting material			2446062
SUPER 2003-3i	0975	10 - 9999	Scraper rubber	with hydraulic inlet flap		Centre	1 pc.	2212906
						left and right	2 pc.	2427961
			Service package for material hoppers	with hydraulic front flap	consisting of floor plates, conveyor covers, mounting material			2446062
SUPER 2100-2	0719	10 - 9999	Scraper rubber			left and right	2 pc.	4601112202
				only with mechanical inlet flap		Centre	1 pc.	4601112215

MATERIAL HOPPER								
Series code	Serial code	Series range	Part	Version	Package content	Position	Requirement	Part no.
SUPER 2100-2	0719	10 - 9999	Service package for material hoppers	with hydraulic front flap	consisting of floor plates, conveyor covers, mounting material			2041452
				with mechanical front flap	consisting of floor plates, conveyor covers, mounting material			2041453
SUPER 2100-2 IP	0719	10 - 9999	Scraper rubber			left and right	2 pc.	4601112202
				only with mechanical inlet flap		Centre	1 pc.	4601112215
			Rubber			left; right	2 pc.	2038431
						left; right	2 pc.	2038429
			Service package for material hoppers	with mechanical front flap	consisting of floor plates, conveyor covers, mounting material			2041453
				with hydraulic front flap	consisting of floor plates, conveyor covers, mounting material			2041452
SUPER 2100-3	0819	10 - 9999	Scraper rubber	only with mechanical inlet flap		Centre	1 pc.	4601112215
				only with mechanical inlet flap		left and right	2 pc.	2183421
				with hydraulic inlet flap		Centre	1 pc.	2212906
				with hydraulic inlet flap		left and right	2 pc.	2213268
			Service package for material hoppers	with mechanical front flap	consisting of floor plates, conveyor covers, mounting material			2269356
				with hydraulic front flap	consisting of floor plates, conveyor covers, mounting material			2269373

MATERIAL HOPPER								
Series code	Serial code	Series range	Part	Version	Package content	Position	Requirement	Part no.
SUPER 2100-3i	0819	10 - 9999	Scraper rubber	only with mechanical inlet flap		left and right	2 pc.	2183421
				with hydraulic inlet flap		Centre	1 pc.	2212906
				only with mechanical inlet flap		Centre	1 pc.	4601112215
				with hydraulic inlet flap		left and right	2 pc.	2213268
			Service package for material hoppers	with hydraulic front flap	consisting of floor plates, conveyor covers, mounting material			2269373
				with mechanical front flap	consisting of floor plates, conveyor covers, mounting material			2269356
SUPER 3000-2	0874	10 - 9999	Scraper rubber			Centre	1 pc.	2119569
						left and right	2 pc.	2120400
			Service package for material hoppers	with hydraulic front flap; with mechanical front flap	consisting of floor plates, conveyor covers, mounting material			2164939
SUPER 3000-3	1074	10 - 9999	Rubber scraper			Centre	1 pc.	2648177
						left and right	2 pc.	2648186
						left and right	2 pc.	2602941
						Centre	1 pc.	2603017
			Service package for material hoppers					2910975
SUPER 3000-3i	1074	10 - 9999	Rubber scraper			Centre	1 pc.	2648177

FEED OF MIX

MATERIAL HOPPER								
Series code	Serial code	Series range	Part	Version	Package content	Position	Re-quire-ment	Part no.
SUPER 3000-3i	1074	10 - 9999	Rubber scraper			left and right	2 pc.	2648186
						left and right	2 pc.	2602941
						Centre	1 pc.	2603017
			Service package for material hoppers					2910975
SUPER 1800-2 SJ	1182	10 - 9999	Scraper rubber	only with asymmetric hopper		left and right	2 pc.	2082175
				only with asymmetric hopper		Centre	1 pc.	2101422
			Service package for material hoppers	with mechanical front flap	consisting of floor plates, conveyor covers, mounting material			2031619
				with hydraulic front flap	consisting of floor plates, conveyor covers, mounting material			2031620
SUPER 1800-3 SJ	1482	10 - 9999	Scraper rubber	with hydraulic inlet flap		Centre	1 pc.	2267686
				with hydraulic inlet flap		left and right	2 pc.	2267692
				only with mechanical inlet flap		Centre	1 pc.	4601112254
				only with mechanical inlet flap		left and right	2 pc.	2267786
			Service package for material hoppers	with hydraulic front flap	consisting of floor plates, conveyor covers, mounting material			2355960
				with mechanical front flap	consisting of floor plates, conveyor covers, mounting material			2355880

MATERIAL HOPPER								
Series code	Serial code	Series range	Part	Version	Package content	Position	Requirement	Part no.
SUPER 1800-3i SJ	1482	10 - 9999	Scraper rubber	with hydraulic inlet flap		Centre	1 pc.	2267686
				with hydraulic inlet flap		left and right	2 pc.	2267692
				only with mechanical inlet flap		Centre	1 pc.	4601112254
				only with mechanical inlet flap		left and right	2 pc.	2267786
			Service package for material hoppers	with hydraulic front flap	consisting of floor plates, conveyor covers, mounting material			2355960
				with mechanical front flap	consisting of floor plates, conveyor covers, mounting material			2355880
MT 3000-2	0761	10 - 9999	Rubber			right	1 pc.	2182289
						Centre	1 pc.	2203763
						left	1 pc.	2182307
MT 3000-3	0861	10 - 9999	Rubber			left	1 pc.	2182307
						Centre	1 pc.	2203763
						right	1 pc.	2182289
MT 3000-3i	0861	10 - 9999	Rubber			left	1 pc.	2182307
						Centre	1 pc.	2203763
						right	1 pc.	2182289

FEED OF MIX

AUGER DRIVE

VÖGELE sprockets and roller chains are produced from highly wear-resistant materials while maintaining the tightest manufacturing tolerances. They are designed for optimum power transmission and smooth running with low wear. This results in high-performance material conveying over a long service life.

AUGER DRIVE						
Series code	Serial code	Series range	Part	Position	Requirement	Part no.
SUPER 700	0790	10 - 9999	Drive chain		1 pc.	2014367
			Track sprocket	connected to gearbox	1 pc.	2014304
SUPER 700-3	0890	10 - 9999	Drive chain		2 pc.	2014367
			Track sprocket	connected to gearbox	2 pc.	2014304
SUPER 700-3i	0890	10 - 9999	Drive chain		2 pc.	2014367
			Track sprocket	connected to gearbox	2 pc.	2014304
SUPER 800	0790	10 - 9999	Drive chain		1 pc.	2014367
			Track sprocket	connected to gearbox	1 pc.	2014304
SUPER 800-3	0890	10 - 9999	Drive chain		2 pc.	2014367
			Track sprocket	connected to gearbox	2 pc.	2014304
SUPER 800-3i	0890	10 - 9999	Drive chain		2 pc.	2014367
			Track sprocket	connected to gearbox	2 pc.	2014304
SUPER 700	0990	10 - 9999	Drive chain		2 pc.	2014367
			Track sprocket	connected to gearbox	2 pc.	2014304
SUPER 800	0990	10 - 9999	Drive chain		2 pc.	2014367
			Track sprocket	connected to gearbox	2 pc.	2014304
SUPER 700i	0990	10 - 9999	Drive chain		2 pc.	2014367
			Track sprocket	connected to gearbox	2 pc.	2014304
SUPER 800i	0990	10 - 9999	Drive chain		2 pc.	2014367
			Track sprocket	connected to gearbox	2 pc.	2014304

AUGER DRIVE						
Series code	Serial code	Series range	Part	Position	Requirement	Part no.
SUPER 1100-2	0811	10 - 9999	Drive chain		2 pc.	2053888
			Sprocket	connected to gearbox	2 pc.	4610062263
SUPER 1100-3	1011, 1411	10 - 9999	Drive chain		2 pc.	2053888
			Sprocket	connected to gearbox	2 pc.	4610062263
SUPER 1100-3i	1011, 1411	10 - 9999	Drive chain		2 pc.	2053888
			Sprocket	connected to gearbox	2 pc.	4610062263
SUPER 1103-2	0911	10 - 9999	Drive chain		2 pc.	2053888
			Sprocket	connected to gearbox	2 pc.	4610062263
SUPER 1103-3	1111, 1511	10 - 9999	Drive chain		2 pc.	2053888
			Sprocket	connected to gearbox	2 pc.	4610062263
SUPER 1103-3i	1111, 1511	10 - 9999	Drive chain		2 pc.	2053888
			Sprocket	connected to gearbox	2 pc.	4610062263
SUPER 1300-2	0811	10 - 9999	Drive chain		2 pc.	2053888
			Sprocket	connected to gearbox	2 pc.	4610062263
SUPER 1300-3	1011, 1411	10 - 9999	Drive chain		2 pc.	2053888
			Sprocket	connected to gearbox	2 pc.	4610062263
SUPER 1300-3i	1011, 1411	10 - 9999	Drive chain		2 pc.	2053888
			Sprocket	connected to gearbox	2 pc.	4610062263
SUPER 1303-2	0911	10 - 9999	Drive chain		2 pc.	2053888
			Sprocket	connected to gearbox	2 pc.	4610062263
SUPER 1303-3	1111, 1511	10 - 9999	Drive chain		2 pc.	2053888
			Sprocket	connected to gearbox	2 pc.	4610062263
SUPER 1303-3i	1111, 1511	10 - 9999	Drive chain		2 pc.	2053888
			Sprocket	connected to gearbox	2 pc.	4610062263
SUPER 1600-1	0782, 0982	10 - 9999	Drive chain		2 pc.	2026963
			Sprocket	connected to gearbox	2 pc.	4610062220

FEED OF MIX

AUGER DRIVE						
Series code	Serial code	Series range	Part	Position	Requirement	Part no.
SUPER 1600-2	1182	10 - 9999	Drive chain		2 pc.	2026906
			Sprocket	connected to gearbox	2 pc.	4610062220
SUPER 1600-3	1582	10 - 9999	Drive chain		2 pc.	2026963
			Sprocket	connected to gearbox	2 pc.	2313254
SUPER 1600-3i	1582	10 - 9999	Drive chain		2 pc.	2026963
			Sprocket	connected to gearbox	2 pc.	2313254
SUPER 1603-1	0783	10 - 9999	Drive chain		2 pc.	2026963
			Sprocket	connected to gearbox	2 pc.	4610062220
SUPER 1603-2	0883	10 - 9999	Drive chain		2 pc.	2026906
			Sprocket	connected to gearbox	2 pc.	4610062220
SUPER 1603-3i	1183	10 - 9999	Drive chain		2 pc.	2026963
			Sprocket	connected to gearbox	2 pc.	2313254
SUPER 1603-3	1183	10 - 9999	Drive chain		2 pc.	2026963
			Sprocket	connected to gearbox	2 pc.	2313254
SUPER 1700-3	1982	10 - 9999	Drive chain		2 pc.	2026963
			Sprocket	connected to gearbox	2 pc.	2313254
SUPER 1700-3i	1982	10 - 9999	Drive chain		2 pc.	2026963
			Sprocket	connected to gearbox	2 pc.	2313254
SUPER 1703-3	1283	10 - 9999	Drive chain		2 pc.	2026963
			Sprocket	connected to gearbox	2 pc.	2313254
SUPER 1703-3i	1283	10 - 9999	Drive chain		2 pc.	2026963
			Sprocket	connected to gearbox	2 pc.	2313254
SUPER 1800-1	0782, 0982	10 - 9999	Drive chain		2 pc.	2026963
			Sprocket	connected to gearbox	2 pc.	4610062175
SUPER 1800-2	1182	10 - 9999	Drive chain		2 pc.	2026906
			Sprocket	connected to gearbox	2 pc.	4610062220

AUGER DRIVE						
Series code	Serial code	Series range	Part	Position	Requirement	Part no.
SUPER 1800-3	1482	10 - 9999	Drive chain		2 pc.	2254381
			Sprocket	connected to gearbox	2 pc.	2225691
SUPER 1800-3i	1482	10 - 9999	Drive chain		2 pc.	2254381
			Sprocket	connected to gearbox	2 pc.	2225691
SUPER 1803-1	0783	10 - 9999	Drive chain		2 pc.	2026963
			Sprocket	connected to gearbox	2 pc.	4610062220
SUPER 1803-2	0883	10 - 9999	Drive chain		2 pc.	2026906
			Sprocket	connected to gearbox	2 pc.	4610062220
SUPER 1803-3	1083	10 - 9999	Drive chain		2 pc.	2254381
			Sprocket	connected to gearbox	2 pc.	2225691
SUPER 1803-3i	1083	10 - 9999	Drive chain		2 pc.	2254381
			Sprocket	connected to gearbox	2 pc.	2225691
SUPER 1900-2	0719	10 - 9999	Drive chain		2 pc.	3301120062
			Sprocket	connected to gearbox	2 pc.	4610062274
SUPER 1900-3	0819	10 - 9999	Drive chain		2 pc.	3301120062
					2 pc.	3301192062
			Sprocket	connected to gearbox	2 pc.	2225691
SUPER 1900-3i	0819	10 - 9999	Drive chain		2 pc.	3301120062
					2 pc.	3301192062
			Sprocket	connected to gearbox	2 pc.	2225691
SUPER 2000-3	1174	10 - 9999	Drive chain		2 pc.	3301120062
			Sprocket	connected to gearbox	2 pc.	2225691
SUPER 2000-3i	1174	10 - 9999	Drive chain		2 pc.	3301120062
			Sprocket	connected to gearbox	2 pc.	2225691
SUPER 2003-3	0975	10 - 9999	Drive chain		2 pc.	3301120062
			Sprocket	connected to gearbox	2 pc.	2225691

FEED OF MIX

AUGER DRIVE						
Series code	Serial code	Series range	Part	Position	Requirement	Part no.
SUPER 2003-3i	0975	10 - 9999	Drive chain		2 pc.	3301120062
			Sprocket	connected to gearbox	2 pc.	2225691
SUPER 2100-2	0719	10 - 9999	Drive chain		2 pc.	3301120062
			Sprocket	connected to gearbox	2 pc.	4610062274
SUPER 2100-2 IP	0719	10 - 9999	Drive chain		2 pc.	3301120062
			Sprocket	connected to gearbox	2 pc.	4610062274
SUPER 2100-3	0819	10 - 9999	Drive chain		2 pc.	3301120062
					2 pc.	3301192062
			Sprocket	connected to gearbox	2 pc.	2225691
SUPER 2100-3i	0819	10 - 9999	Drive chain		2 pc.	3301120062
					2 pc.	3301192062
			Sprocket	connected to gearbox	2 pc.	2225691
SUPER 3000-2	0874	10 - 32	Sprocket	connected to gearbox	2 pc.	2115834
		10 - 9999	Drive chain		2 pc.	2118129
		33 - 9999	Sprocket	connected to gearbox	2 pc.	2362677
SUPER 3000-3	1074	10 - 9999	Drive chain		2 pc.	2612884
			Sprocket	connected to gearbox	2 pc.	2362677
SUPER 3000-3i	1074	10 - 9999	Drive chain		2 pc.	2612884
			Sprocket	connected to gearbox	2 pc.	2362677
SUPER 1800-2 SJ	1182	10 - 9999	Drive chain		2 pc.	2026906
			Sprocket	connected to gearbox	2 pc.	4610062220
SUPER 1800-3 SJ	1482	10 - 9999	Drive chain		2 pc.	2254381
			Sprocket	connected to gearbox	2 pc.	2225691
SUPER 1800-3i SJ	1482	10 - 9999	Drive chain		2 pc.	2254381
			Sprocket	connected to gearbox	2 pc.	2225691

SENSORS FOR FEED OF MIX

Blade and sonic sensors from VÖGELE measure the mix rate in order to precisely adjust the feed rate of the auger in automatic mode to the current paving rate by means of proportional drive control.

SENSORS FOR FEED OF MIX					
Series code	Serial code	Series range	Part	Position	Part no.
SUPER 700-3	0890	10 - 9999	Mechanical sensor	left; right	2028964
			Ultrasonic sensor	left; right	2484809
SUPER 700-3i	0890	10 - 9999	Mechanical sensor	left; right	2028964
			Ultrasonic sensor	left; right	2484809
SUPER 800	0790	10 - 9999	Mechanical sensor	left; right	2028964
			Spiral cable	for ultrasonic sensor	2035353
			Ultrasonic sensor	left; right	2013495
SUPER 800-3	0890	10 - 9999	Mechanical sensor	left; right	2028964
			Ultrasonic sensor	left; right	2484809
SUPER 800-3i	0890	10 - 9999	Mechanical sensor	left; right	2028964
			Ultrasonic sensor	left; right	2484809
SUPER 1100-2	0811	10 - 9999	Mechanical sensor	left; right	2042420
			Spiral cable	for ultrasonic sensor	2028733
			Ultrasonic sensor	left; right	2013496
SUPER 1100-3	1011, 1411	10 - 9999	Mechanical sensor	left; right	2042420
			Spiral cable	for ultrasonic sensor	2284323
			Ultrasonic sensor	left; right	2484809
SUPER 1100-3i	1011, 1411	10 - 9999	Mechanical sensor	left; right	2042420
			Spiral cable	for ultrasonic sensor	2284323
			Ultrasonic sensor	left; right	2484809

SENSORS FOR FEED OF MIX					
Series code	Serial code	Series range	Part	Position	Part no.
SUPER 1103-2	0911	10 - 9999	Mechanical sensor	left; right	2042420
			Spiral cable	for ultrasonic sensor	2028733
			Ultrasonic sensor	left; right	2013496
SUPER 1103-3	1111, 1511	10 - 9999	Mechanical sensor	left; right	2042420
			Spiral cable	for ultrasonic sensor	2284323
			Ultrasonic sensor	left; right	2484809
SUPER 1103-3i	1111, 1511	10 - 9999	Mechanical sensor	left; right	2042420
			Spiral cable	for ultrasonic sensor	2284323
			Ultrasonic sensor	left; right	2484809
SUPER 1300-2	0811	10 - 9999	Mechanical sensor	left; right	2042420
			Spiral cable	for ultrasonic sensor	2028733
			Ultrasonic sensor	left; right	2013496
SUPER 1300-3	1011, 1411	10 - 9999	Mechanical sensor	left; right	2042420
			Spiral cable	for ultrasonic sensor	2284323
			Ultrasonic sensor	left; right	2484809
SUPER 1300-3i	1011, 1411	10 - 9999	Mechanical sensor	left; right	2042420
			Spiral cable	for ultrasonic sensor	2284323
			Ultrasonic sensor	left; right	2484809
SUPER 1303-2	0911	10 - 9999	Mechanical sensor	left; right	2042420
			Spiral cable	for ultrasonic sensor	2028733
			Ultrasonic sensor	left; right	2013496
SUPER 1303-3	1111, 1511	10 - 9999	Mechanical sensor	left; right	2042420
			Spiral cable	for ultrasonic sensor	2284323
			Ultrasonic sensor	left; right	2484809
SUPER 1303-3i	1111, 1511	10 - 9999	Mechanical sensor	left; right	2042420
			Spiral cable	for ultrasonic sensor	2284323

SENSORS FOR FEED OF MIX

Series code	Serial code	Series range	Part	Position	Part no.
SUPER 1303-3i	1111, 1511	10 - 9999	Ultrasonic sensor	left; right	2484809
SUPER 1600-1	0782	10 - 302	Mechanical sensor	right	2454130071
				left	2454130070
			Spiral cable	for ultrasonic sensor	2460770070
			Ultrasonic sensor	left; right	2454130067
		303 - 9999	Mechanical sensor	left	2454130070
				right	2454130071
			Spiral cable	for ultrasonic sensor	2460770070
			Ultrasonic sensor	left; right	2013496
	0982	10 - 9999	Mechanical sensor	left	2032512
				right	2032513
			Spiral cable	for ultrasonic sensor	2028733
			Ultrasonic sensor	left; right	2013496
SUPER 1600-2	1182	10 - 9999	Mechanical sensor	left	2032512
				right	2032513
			Spiral cable	for ultrasonic sensor	2028733
			Ultrasonic sensor	left; right	2013496
SUPER 1600-3	1582	10 - 9999	Mechanical sensor	left	2032512
				right	2032513
			Spiral cable	for ultrasonic sensor	2284323
			Ultrasonic sensor	left; right	2484809
SUPER 1600-3i	1582	10 - 9999	Mechanical sensor	left	2032512
				right	2032513
			Spiral cable	for ultrasonic sensor	2284323
			Ultrasonic sensor	left; right	2484809
SUPER 1603-1	0783	10 - 238	Mechanical sensor	left	2454130070

FEED OF MIX

SENSORS FOR FEED OF MIX					
Series code	Serial code	Series range	Part	Position	Part no.
SUPER 1603-1	0783	10 - 238	Mechanical sensor	right	2454130071
			Spiral cable	for ultrasonic sensor	2460770070
			Ultrasonic sensor	left; right	2454130067
		239 - 9999	Mechanical sensor	left	2454130070
				right	2454130071
			Spiral cable	for ultrasonic sensor	2460770070
			Ultrasonic sensor	left; right	2013496
SUPER 1603-2	0883	10 - 9999	Mechanical sensor	left	2032512
				right	2032513
			Spiral cable	for ultrasonic sensor	2028733
			Ultrasonic sensor	left; right	2013496
SUPER 1603-3i	1183	10 - 9999	Mechanical sensor	left	2032512
				right	2032513
			Spiral cable	for ultrasonic sensor	2284323
			Ultrasonic sensor	left; right	2484809
SUPER 1603-3	1183	10 - 9999	Mechanical sensor	left	2032512
				right	2032513
			Spiral cable	for ultrasonic sensor	2284323
			Ultrasonic sensor	left; right	2484809
SUPER 1700-3	1982	10 - 9999	Spiral cable	for ultrasonic sensor	2284323
			Ultrasonic sensor	left; right	2484818
SUPER 1700-3i	1982	10 - 9999	Spiral cable	for ultrasonic sensor	2284323
			Ultrasonic sensor	left; right	2484818
SUPER 1703-3	1283	10 - 9999	Spiral cable	for ultrasonic sensor	2284323
			Ultrasonic sensor	left; right	2484818
SUPER 1703-3i	1283	10 - 9999	Spiral cable	for ultrasonic sensor	2284323

SENSORS FOR FEED OF MIX

Series code	Serial code	Series range	Part	Position	Part no.
SUPER 1703-3i	1283	10 - 9999	Ultrasonic sensor	left; right	2484818
SUPER 1800-1	0782	10 - 302	Mechanical sensor	right	2454130071
				left	2454130070
			Spiral cable	for ultrasonic sensor	2460770070
			Ultrasonic sensor	left; right	2454130067
		303 - 9999	Mechanical sensor	left	2454130070
				right	2454130071
			Spiral cable	for ultrasonic sensor	2460770070
			Ultrasonic sensor	left; right	2013496
	0982	10 - 9999	Mechanical sensor	left	2032512
				right	2032513
			Spiral cable	for ultrasonic sensor	2028733
			Ultrasonic sensor	left; right	2013496
SUPER 1800-2	1182	10 - 9999	Mechanical sensor	left	2032512
				right	2032513
			Spiral cable	for ultrasonic sensor	2028733
			Ultrasonic sensor	left; right	2013496
SUPER 1800-3	1482	10 - 9999	Mechanical sensor	left	2032512
				right	2032513
			Spiral cable	for ultrasonic sensor	2284323
			Ultrasonic sensor	left; right	2484809
SUPER 1800-3i	1482	10 - 9999	Mechanical sensor	left	2032512
				right	2032513
			Spiral cable	for ultrasonic sensor	2284323
			Ultrasonic sensor	left; right	2484809
SUPER 1803-1	0783	10 - 238	Mechanical sensor	left	2454130070

FEED OF MIX

SENSORS FOR FEED OF MIX					
Series code	Serial code	Series range	Part	Position	Part no.
SUPER 1803-1	0783	10 - 238	Mechanical sensor	right	2454130071
			Spiral cable	for ultrasonic sensor	2460770070
			Ultrasonic sensor	left; right	2454130067
		239 - 9999	Mechanical sensor	left	2454130070
				right	2454130071
			Spiral cable	for ultrasonic sensor	2460770070
			Ultrasonic sensor	left; right	2013496
SUPER 1803-2	0883	10 - 9999	Mechanical sensor	left	2032512
				right	2032513
			Spiral cable	for ultrasonic sensor	2028733
			Ultrasonic sensor	left; right	2013496
SUPER 1803-3	1083	10 - 9999	Mechanical sensor	left	2032512
				right	2032513
			Spiral cable	for ultrasonic sensor	2284323
			Ultrasonic sensor	left; right	2484809
SUPER 1803-3i	1083	10 - 9999	Mechanical sensor	left	2032512
				right	2032513
			Spiral cable	for ultrasonic sensor	2284323
			Ultrasonic sensor	left; right	2484809
SUPER 1900-2	0719	10 - 9999	Mechanical sensor	left	2032512
				right	2032513
			Spiral cable	for ultrasonic sensor	2028733
			Ultrasonic sensor	left; right	2013496
SUPER 1900-3	0819	10 - 9999	Mechanical sensor	right	2032513
				left	2032512
			Spiral cable	for ultrasonic sensor	2284323

SENSORS FOR FEED OF MIX

Series code	Serial code	Series range	Part	Position	Part no.
SUPER 1900-3	0819	10 - 9999	Ultrasonic sensor	left; right	2484809
SUPER 1900-3i	0819	10 - 9999	Mechanical sensor	left	2032512
				right	2032513
			Spiral cable	for ultrasonic sensor	2284323
			Ultrasonic sensor	left; right	2484809
SUPER 2000-3	1174	10 - 9999	Spiral cable	for ultrasonic sensor	2028733
			Ultrasonic sensor	left; right	2343348
SUPER 2000-3i	1174	10 - 9999	Spiral cable	for ultrasonic sensor	2028733
			Ultrasonic sensor	left; right	2343348
SUPER 2003-3	0975	10 - 9999	Spiral cable	for ultrasonic sensor	2028733
			Ultrasonic sensor	left; right	2343348
SUPER 2003-3i	0975	10 - 9999	Spiral cable	for ultrasonic sensor	2028733
			Ultrasonic sensor	left; right	2343348
SUPER 2100-2	0719	10 - 9999	Mechanical sensor	left	2032512
				right	2032513
			Spiral cable	for ultrasonic sensor	2028733
			Ultrasonic sensor	left; right	2013496
SUPER 2100-2 IP	0719	10 - 9999	Mechanical sensor	right	2032513
				left	2032512
			Spiral cable	for ultrasonic sensor	2028733
			Ultrasonic sensor	left; right	2013496
SUPER 2100-3	0819	10 - 9999	Mechanical sensor	left	2032512
				right	2032513
			Spiral cable	for ultrasonic sensor	2284323
			Ultrasonic sensor	left; right	2484809
SUPER 2100-3i	0819	10 - 9999	Mechanical sensor	left	2032512

FEED OF MIX

SENSORS FOR FEED OF MIX					
Series code	Serial code	Series range	Part	Position	Part no.
SUPER 2100-3i	0819	10 - 9999	Mechanical sensor	right	2032513
			Spiral cable	for ultrasonic sensor	2284323
			Ultrasonic sensor	left; right	2484809
SUPER 3000-2	0874	10 - 9999	Mechanical sensor	left	2032512
				right	2032513
			Spiral cable	for ultrasonic sensor	2028733
			Ultrasonic sensor	left; right	2013496
SUPER 1800-2 SJ	1182	10 - 9999	Mechanical sensor	right	2032513
				left	2032512
			Spiral cable	for ultrasonic sensor	2028733
			Ultrasonic sensor	left; right	2013496
SUPER 1800-3i SJ	1482	10 - 9999	Mechanical sensor	left	2032512
				right	2032513
			Spiral cable	for ultrasonic sensor	2284323
			Ultrasonic sensor	left; right	2484809

AUGERS

The service package for spreading augers includes all the spare parts needed for your VÖGELE paver's basic auger, from auger shafts and auger blades to bearings, drive chains and sprockets.

AUGERS									
Series code	Serial code	Series range	Part	Version	Length of each auger extension	Package content	Position	Working width	Part no.
SUPER 700	0790	10 - 14	Service package for spreading augers						2211984
		10 - 9999	Service package for auger blades			consisting of auger blades, nuts, bolts	right		2178495
						consisting of auger blades, nuts, bolts	left		2178498
		15 - 9999	Service package for spreading augers						2198659
SUPER 700-3	0890	10 - 9999	Service package for auger blades			consisting of auger blades, nuts, bolts	right		2178495
						consisting of auger blades, nuts, bolts	left		2178498
			Service package for spreading augers						2198659
SUPER 700-3i	0890	10 - 9999	Service package for auger blades			consisting of auger blades, nuts, bolts	right		2178495

FEED OF MIX

AUGERS									
Series code	Serial code	Series range	Part	Version	Length of each auger exten-sion	Package content	Position	Working width	Part no.
SUPER 700-3i	0890	10 - 9999	Service package for auger blades			consisting of auger blades, nuts, bolts	left		2178498
			Service package for spreading augers						2198659
SUPER 800	0790	10 - 14	Service package for spreading augers						2211984
		10 - 9999	Service package for auger blades			consisting of auger blades, nuts, bolts	right		2178495
						consisting of auger blades, nuts, bolts	left		2178498
		15 - 9999	Service package for spreading augers						2198659
SUPER 800-3	0890	10 - 9999	Service package for auger blades			consisting of auger blades, nuts, bolts	right		2178495
						consisting of auger blades, nuts, bolts	left		2178498
			Service package for spreading augers						2198659
SUPER 800-3i	0890	10 - 9999	Service package for auger blades			consisting of auger blades, nuts, bolts	right		2178495

AUGERS

Series code	Serial code	Series range	Part	Version	Length of each auger exten-sion	Package content	Position	Working width	Part no.
SUPER 800-3i	0890	10 - 9999	Service package for auger blades			consisting of auger blades, nuts, bolts	left		2178498
			Service package for spreading augers						2198659
SUPER 1100-2	0811	10 - 329	Service package for spreading augers						2204813
		10 - 543	Service package for auger blades			consisting of auger blades, nuts, bolts	right		2052810
						consisting of auger blades, nuts, bolts	left		2053650
		330 - 543	Service package for spreading augers						2198699
		544 - 9999	Service package for spreading augers						2259296
SUPER 1100-3	1011, 1411	10 - 9999	Service package for auger blades			consisting of auger blades, nuts, bolts			2403347
			Service package for spreading augers						2356555
SUPER 1100-3i	1011, 1411	10 - 9999	Service package for auger blades			consisting of auger blades, nuts, bolts			2403347

FEED OF MIX

AUGERS									
Series code	Serial code	Series range	Part	Version	Length of each auger exten-sion	Package content	Position	Working width	Part no.
SUPER 1100-3i	1011, 1411	10 - 9999	Service package for spreading augers						2356555
SUPER 1103-2	0911	10 - 331	Service package for spreading augers						2204813
		10 - 461	Service package for auger blades			consisting of auger blades, nuts, bolts	right		2052810
						consisting of auger blades, nuts, bolts	left		2053650
		332 - 461	Service package for spreading augers						2198699
		462 - 9999	Service package for spreading augers						2259296
SUPER 1103-3	1111, 1511	10 - 9999	Service package for auger blades			consisting of auger blades, nuts, bolts			2403347
			Service package for spreading augers						2356555
SUPER 1103-3i	1111, 1511	10 - 9999	Service package for auger blades			consisting of auger blades, nuts, bolts			2403347

AUGERS

Series code	Serial code	Series range	Part	Version	Length of each auger exten-sion	Package content	Position	Working width	Part no.
SUPER 1103-3i	1111, 1511	10 - 9999	Service package for spreading augers						2356555
SUPER 1300-2	0811	10 - 329	Service package for spreading augers						2204813
		10 - 543	Service package for auger blades			consisting of auger blades, nuts, bolts	right		2052810
						consisting of auger blades, nuts, bolts	left		2053650
		330 - 543	Service package for spreading augers						2198699
		544 - 9999	Service package for spreading augers						2259296
SUPER 1300-3	1011, 1411	10 - 9999	Service package for auger blades			consisting of auger blades, nuts, bolts			2403347
			Service package for spreading augers						2356555
SUPER 1300-3i	1011, 1411	10 - 9999	Service package for auger blades			consisting of auger blades, nuts, bolts			2403347

FEED OF MIX

AUGERS									
Series code	Serial code	Series range	Part	Version	Length of each auger exten-sion	Package content	Position	Working width	Part no.
SUPER 1300-3i	1011, 1411	10 - 9999	Service package for spreading augers						2356555
SUPER 1303-2	0911	10 - 331	Service package for spreading augers						2204813
		10 - 461	Service package for auger blades			consisting of auger blades, nuts, bolts	right		2052810
						consisting of auger blades, nuts, bolts	left		2053650
		332 - 461	Service package for spreading augers						2198699
		462 - 9999	Service package for spreading augers						2259296
SUPER 1303-3	1111, 1511	10 - 9999	Service package for auger blades			consisting of auger blades, nuts, bolts			2403347
			Service package for spreading augers						2356555
SUPER 1303-3i	1111, 1511	10 - 9999	Service package for auger blades			consisting of auger blades, nuts, bolts			2403347

AUGERS

Series code	Serial code	Series range	Part	Version	Length of each auger extension	Package content	Position	Working width	Part no.
SUPER 1303-3i	1111, 1511	10 - 9999	Service package for spreading augers						2356555
SUPER 1600-1	0782	10 - 118	Service package for spreading augers						2013189
		10 - 9999	Service package for auger blades			consisting of auger blades, nuts, bolts			2013195
				for auger extensions	1.045 m	Consisting of auger blades, nuts, bolts for left and right auger extension		up to 4.6 metres	2432624
				for auger extensions	2.305 m	Consisting of auger blades, nuts, bolts for left and right auger extension		4.6 – 7.1 metres	2432658
		119 - 9999	Service package for spreading augers						2032089
	0982	10 - 9999	Service package for auger blades			consisting of auger blades, nuts, bolts			2013195

FEED OF MIX

AUGERS									
Series code	Serial code	Series range	Part	Version	Length of each auger extension	Package content	Position	Working width	Part no.
SUPER 1600-1	0982	10 - 9999	Service package for auger blades	for auger extensions	2.305 m	Consisting of auger blades, nuts, bolts for left and right auger extension		4.6 – 7.1 metres	2432658
				for auger extensions	1.045 m	Consisting of auger blades, nuts, bolts for left and right auger extension		up to 4.6 metres	2432624
			Service package for spreading augers						2032089
SUPER 1600-2	1182	10 - 9999	Service package for auger blades			consisting of auger blades, nuts, bolts			2013195
				for auger extensions	0.65 m	Consisting of auger blades, nuts, bolts for left and right auger extension			2432398
				for auger extensions	1.045 m	Consisting of auger blades, nuts, bolts for left and right auger extension		up to 4.6 metres	2432624

AUGERS

Series code	Serial code	Series range	Part	Version	Length of each auger extension	Package content	Position	Working width	Part no.
SUPER 1600-2	1182	10 - 9999	Service package for auger blades	for auger extensions	1 m	Consisting of auger blades, nuts, bolts for left and right auger extension			2432450
			Service package for spreading augers						2204847
SUPER 1600-3	1582	10 - 9999	Service package for auger blades			consisting of auger blades, nuts, bolts			2013195
				for auger extensions	1 m	Consisting of auger blades, nuts, bolts for left and right auger extension			2432450
				for auger extensions	0.65 m	Consisting of auger blades, nuts, bolts for left and right auger extension			2432448
			Service package for spreading augers						2368969
SUPER 1600-3i	1582	10 - 9999	Service package for auger blades			consisting of auger blades, nuts, bolts			2013195

AUGERS									
Series code	Serial code	Series range	Part	Version	Length of each auger extension	Package content	Position	Working width	Part no.
SUPER 1600-3i	1582	10 - 9999	Service package for auger blades	for auger extensions	1 m	Consisting of auger blades, nuts, bolts for left and right auger extension			2432450
				for auger extensions	0.65 m	Consisting of auger blades, nuts, bolts for left and right auger extension			2432448
			Service package for spreading augers						2368969
SUPER 1603-1	0783	10 - 113	Service package for spreading augers						2013189
		10 - 9999	Service package for auger blades			consisting of auger blades, nuts, bolts			2013195
				for auger extensions	1.045 m	Consisting of auger blades, nuts, bolts for left and right auger extension		up to 4.6 metres	2432624

AUGERS

Series code	Serial code	Series range	Part	Version	Length of each auger extension	Package content	Position	Working width	Part no.
SUPER 1603-1	0783	114 - 9999	Service package for spreading augers						2032089
SUPER 1603-2	0883	10 - 9999	Service package for auger blades			consisting of auger blades, nuts, bolts			2013195
				for auger extensions	0.65 m	Consisting of auger blades, nuts, bolts for left and right auger extension			2432398
				for auger extensions	1.045 m	Consisting of auger blades, nuts, bolts for left and right auger extension		up to 4.6 metres	2432624
				for auger extensions	1 m	Consisting of auger blades, nuts, bolts for left and right auger extension			2432450
			Service package for spreading augers						2204847
SUPER 1603-3i	1183	10 - 9999	Service package for auger blades			consisting of auger blades, nuts, bolts			2013195

FEED OF MIX

AUGERS									
Series code	Serial code	Series range	Part	Version	Length of each auger extension	Package content	Position	Working width	Part no.
SUPER 1603-3i	1183	10 - 9999	Service package for auger blades	for auger extensions	1 m	Consisting of auger blades, nuts, bolts for left and right auger extension			2432450
				for auger extensions	0.65 m	Consisting of auger blades, nuts, bolts for left and right auger extension			2432448
			Service package for spreading augers						2368969
SUPER 1603-3	1183	10 - 9999	Service package for auger blades			consisting of auger blades, nuts, bolts			2013195
				for auger extensions	1 m	Consisting of auger blades, nuts, bolts for left and right auger extension			2432450
				for auger extensions	0.65 m	Consisting of auger blades, nuts, bolts for left and right auger extension			2432448

AUGERS

Series code	Serial code	Series range	Part	Version	Length of each auger extension	Package content	Position	Working width	Part no.
SUPER 1603-3	1183	10 - 9999	Service package for spreading augers						2368969
SUPER 1700-3	1982	10 - 9999	Service package for auger blades			consisting of auger blades, nuts, bolts			2013195
				for auger extensions	3x 1 ft each, plug-in	Consisting of auger blades, nuts, bolts for left and right auger extension			2446119
			Service package for spreading augers						2368969
SUPER 1700-3i	1982	10 - 9999	Service package for auger blades			consisting of auger blades, nuts, bolts			2013195
				for auger extensions	3x 1 ft each, plug-in	Consisting of auger blades, nuts, bolts for left and right auger extension			2446119
			Service package for spreading augers						2368969
SUPER 1703-3	1283	10 - 9999	Service package for auger blades			consisting of auger blades, nuts, bolts			2013195

FEED OF MIX

AUGERS									
Series code	Serial code	Series range	Part	Version	Length of each auger extension	Package content	Position	Working width	Part no.
SUPER 1703-3	1283	10 - 9999	Service package for auger blades	for auger extensions	3x 1 ft each, plug-in	Consisting of auger blades, nuts, bolts for left and right auger extension			2446119
			Service package for spreading augers						2368969
SUPER 1703-3i	1283	10 - 9999	Service package for auger blades			consisting of auger blades, nuts, bolts			2013195
				for auger extensions	3x 1 ft each, plug-in	Consisting of auger blades, nuts, bolts for left and right auger extension			2446119
			Service package for spreading augers						2368969
SUPER 1800-1	0782	10 - 118	Service package for spreading augers						2146796
		10 - 9999	Service package for auger blades			consisting of auger blades, nuts, bolts			2013195

AUGERS

Series code	Serial code	Series range	Part	Version	Length of each auger extension	Package content	Position	Working width	Part no.
SUPER 1800-1	0782	10 - 9999	Service package for auger blades	for auger extensions	1.045 m	Consisting of auger blades, nuts, bolts for left and right auger extension		up to 4.6 metres	2432624
				for auger extensions	2.305 m	Consisting of auger blades, nuts, bolts for left and right auger extension		4.6 – 7.1 metres	2432658
		119 - 9999	Service package for spreading augers						2091731
	0982	10 - 9999	Service package for auger blades			consisting of auger blades, nuts, bolts			2013195
				for auger extensions	2.305 m	Consisting of auger blades, nuts, bolts for left and right auger extension		4.6 – 7.1 metres	2432658
				for auger extensions	1.045 m	Consisting of auger blades, nuts, bolts for left and right auger extension		up to 4.6 metres	2432624

FEED OF MIX

AUGERS									
Series code	Serial code	Series range	Part	Version	Length of each auger extension	Package content	Position	Working width	Part no.
SUPER 1800-1	0982	10 - 9999	Service package for spreading augers						2091731
SUPER 1800-2	1182	10 - 9999	Service package for auger blades			consisting of auger blades, nuts, bolts			2013195
				for auger extensions	0.65 m	Consisting of auger blades, nuts, bolts for left and right auger extension			2432398
				for auger extensions	1.045 m	Consisting of auger blades, nuts, bolts for left and right auger extension		up to 4.6 metres	2432624
				for auger extensions	1 m	Consisting of auger blades, nuts, bolts for left and right auger extension			2432450
			Service package for spreading augers						2198422
SUPER 1800-3	1482	10 - 9999	Service package for auger blades			consisting of auger blades, nuts, bolts			2355876

AUGERS									
Series code	Serial code	Series range	Part	Version	Length of each auger extension	Package content	Position	Working width	Part no.
SUPER 1800-3	1482	10 - 9999	Service package for auger blades	for auger extensions	0.65 m	Consisting of auger blades, nuts, bolts for left and right auger extension			2432398
				for auger extensions	2.305 m	Consisting of auger blades, nuts, bolts for left and right auger extension		4.6 – 7.1 metres	2432658
				for auger extensions	1 m	Consisting of auger blades, nuts, bolts for left and right auger extension			2432450
				for auger extensions	1.045 m	Consisting of auger blades, nuts, bolts for left and right auger extension		up to 4.6 metres	2432624
			Service package for spreading augers						2355964
SUPER 1800-3i	1482	10 - 9999	Service package for auger blades			consisting of auger blades, nuts, bolts			2355876

FEED OF MIX

AUGERS									
Series code	Serial code	Series range	Part	Version	Length of each auger extension	Package content	Position	Working width	Part no.
SUPER 1800-3i	1482	10 - 9999	Service package for auger blades	for auger extensions	0.65 m	Consisting of auger blades, nuts, bolts for left and right auger extension			2432398
				for auger extensions	2.305 m	Consisting of auger blades, nuts, bolts for left and right auger extension		4.6 – 7.1 metres	2432658
				for auger extensions	1 m	Consisting of auger blades, nuts, bolts for left and right auger extension			2432450
				for auger extensions	1.045 m	Consisting of auger blades, nuts, bolts for left and right auger extension		up to 4.6 metres	2432624
			Service package for spreading augers						2355964

AUGERS

Series code	Serial code	Series range	Part	Version	Length of each auger extension	Package content	Position	Working width	Part no.
SUPER 1803-1	0783	10 - 113	Service package for spreading augers						2013189
		10 - 9999	Service package for auger blades			consisting of auger blades, nuts, bolts			2013195
				for auger extensions	1.045 m	Consisting of auger blades, nuts, bolts for left and right auger extension		up to 4.6 metres	2432624
		114 - 9999	Service package for spreading augers						2032089
SUPER 1803-2	0883	10 - 9999	Service package for auger blades			consisting of auger blades, nuts, bolts			2013195
				for auger extensions	0.65 m	Consisting of auger blades, nuts, bolts for left and right auger extension			2432398
				for auger extensions	1.045 m	Consisting of auger blades, nuts, bolts for left and right auger extension		up to 4.6 metres	2432624

FEED OF MIX

AUGERS									
Series code	Serial code	Series range	Part	Version	Length of each auger extension	Package content	Position	Working width	Part no.
SUPER 1803-2	0883	10 - 9999	Service package for auger blades	for auger extensions	1 m	Consisting of auger blades, nuts, bolts for left and right auger extension			2432450
			Service package for spreading augers						2204847
SUPER 1803-3	1083	10 - 9999	Service package for auger blades			consisting of auger blades, nuts, bolts			2355876
				for auger extensions	0.65 m	Consisting of auger blades, nuts, bolts for left and right auger extension			2432398
				for auger extensions	1.045 m	Consisting of auger blades, nuts, bolts for left and right auger extension		up to 4.6 metres	2432624
				for auger extensions	1 m	Consisting of auger blades, nuts, bolts for left and right auger extension			2432450

AUGERS

Series code	Serial code	Series range	Part	Version	Length of each auger extension	Package content	Position	Working width	Part no.
SUPER 1803-3	1083	10 - 9999	Service package for spreading augers						2355964
SUPER 1803-3i	1083	10 - 9999	Service package for auger blades	for auger extensions	0.65 m	Consisting of auger blades, nuts, bolts for left and right auger extension			2432398
				for auger extensions	1 m	Consisting of auger blades, nuts, bolts for left and right auger extension			2432450
				for auger extensions	1.045 m	Consisting of auger blades, nuts, bolts for left and right auger extension		up to 4.6 metres	2432624
						consisting of auger blades, nuts, bolts			2355876
			Service package for spreading augers						2355964
SUPER 1900-2	0719	10 - 9999	Service package for auger blades			consisting of auger blades, nuts, bolts			2013196

FEED OF MIX

AUGERS									
Series code	Serial code	Series range	Part	Version	Length of each auger extension	Package content	Position	Working width	Part no.
SUPER 1900-2	0719	10 - 9999	Service package for auger blades	for auger extensions	0.65 m	Consisting of auger blades, nuts, bolts for left and right auger extension			2432398
				for auger extensions	1.045 m	Consisting of auger blades, nuts, bolts for left and right auger extension		up to 4.6 metres	2432624
				for auger extensions	1 m	Consisting of auger blades, nuts, bolts for left and right auger extension			2432450
			Service package for spreading augers						2198311
SUPER 1900-3	0819	10 - 9999	Service package for auger blades			consisting of auger blades, nuts, bolts			2013196
				for auger extensions	0.65 m	Consisting of auger blades, nuts, bolts for left and right auger extension			2432398

AUGERS

Series code	Serial code	Series range	Part	Version	Length of each auger extension	Package content	Position	Working width	Part no.
SUPER 1900-3	0819	10 - 9999	Service package for auger blades	for auger extensions	2.305 m	Consisting of auger blades, nuts, bolts for left and right auger extension		4.6 – 7.1 metres	2432658
				for auger extensions	1 m	Consisting of auger blades, nuts, bolts for left and right auger extension			2432450
				for auger extensions	1.045 m	Consisting of auger blades, nuts, bolts for left and right auger extension		up to 4.6 metres	2432624
			Service package for spreading augers						2269380
SUPER 1900-3i	0819	10 - 9999	Service package for auger blades			consisting of auger blades, nuts, bolts			2013196
				for auger extensions	0.65 m	Consisting of auger blades, nuts, bolts for left and right auger extension			2432398

FEED OF MIX

AUGERS									
Series code	Serial code	Series range	Part	Version	Length of each auger extension	Package content	Position	Working width	Part no.
SUPER 1900-3i	0819	10 - 9999	Service package for auger blades	for auger extensions	2.305 m	Consisting of auger blades, nuts, bolts for left and right auger extension		4.6 – 7.1 metres	2432658
				for auger extensions	1 m	Consisting of auger blades, nuts, bolts for left and right auger extension			2432450
				for auger extensions	1.045 m	Consisting of auger blades, nuts, bolts for left and right auger extension		up to 4.6 metres	2432624
			Service package for spreading augers						2269380
SUPER 2000-3	1174	10 - 9999	Service package for auger blades			consisting of auger blades, nuts, bolts			2013196
				for auger extensions	0.65 m	Consisting of auger blades, nuts, bolts for left and right auger extension			2432398

AUGERS									
Series code	Serial code	Series range	Part	Version	Length of each auger extension	Package content	Position	Working width	Part no.
SUPER 2000-3	1174	10 - 9999	Service package for auger blades	for auger extensions	1 m	Consisting of auger blades, nuts, bolts for left and right auger extension			2432450
				for auger extensions	1.045 m	Consisting of auger blades, nuts, bolts for left and right auger extension		up to 4.6 metres	2432624
				for auger extensions	3x 1 ft each, plug-in	Consisting of auger blades, nuts, bolts for left and right auger extension			2446119
			Service package for spreading augers						2449373
SUPER 2000-3i	1174	10 - 9999	Service package for auger blades			consisting of auger blades, nuts, bolts			2013196
				for auger extensions	0.65 m	Consisting of auger blades, nuts, bolts for left and right auger extension			2432398

FEED OF MIX

AUGERS									
Series code	Serial code	Series range	Part	Version	Length of each auger extension	Package content	Position	Working width	Part no.
SUPER 2000-3i	1174	10 - 9999	Service package for auger blades	for auger extensions	1 m	Consisting of auger blades, nuts, bolts for left and right auger extension			2432450
				for auger extensions	1.045 m	Consisting of auger blades, nuts, bolts for left and right auger extension		up to 4.6 metres	2432624
				for auger extensions	3x 1 ft each, plug-in	Consisting of auger blades, nuts, bolts for left and right auger extension			2446119
			Service package for spreading augers						2449373
SUPER 2003-3	0975	10 - 9999	Service package for auger blades			consisting of auger blades, nuts, bolts			2013196
				for auger extensions	0.65 m	Consisting of auger blades, nuts, bolts for left and right auger extension			2432398

AUGERS

Series code	Serial code	Series range	Part	Version	Length of each auger extension	Package content	Position	Working width	Part no.
SUPER 2003-3	0975	10 - 9999	Service package for auger blades	for auger extensions	1 m	Consisting of auger blades, nuts, bolts for left and right auger extension			2432450
				for auger extensions	1.045 m	Consisting of auger blades, nuts, bolts for left and right auger extension		up to 4.6 metres	2432624
				for auger extensions	3x 1 ft each, plug-in	Consisting of auger blades, nuts, bolts for left and right auger extension			2446119
			Service package for spreading augers						2449373
SUPER 2003-3i	0975	10 - 9999	Service package for auger blades			consisting of auger blades, nuts, bolts			2013196
				for auger extensions	0.65 m	Consisting of auger blades, nuts, bolts for left and right auger extension			2432398

FEED OF MIX

AUGERS									
Series code	Serial code	Series range	Part	Version	Length of each auger extension	Package content	Position	Working width	Part no.
SUPER 2003-3i	0975	10 - 9999	Service package for auger blades	for auger extensions	1 m	Consisting of auger blades, nuts, bolts for left and right auger extension			2432450
				for auger extensions	1.045 m	Consisting of auger blades, nuts, bolts for left and right auger extension		up to 4.6 metres	2432624
				for auger extensions	3x 1 ft each, plug-in	Consisting of auger blades, nuts, bolts for left and right auger extension			2446119
			Service package for spreading augers						2449373
SUPER 2100-2	0719	10 - 9999	Service package for auger blades			consisting of auger blades, nuts, bolts			2013197
				for auger extensions	0.65 m	Consisting of auger blades, nuts, bolts for left and right auger extension			2432398

AUGERS

Series code	Serial code	Series range	Part	Version	Length of each auger extension	Package content	Position	Working width	Part no.
SUPER 2100-2	0719	10 - 9999	Service package for auger blades	for auger extensions	2.305 m	Consisting of auger blades, nuts, bolts for left and right auger extension		4.6 – 7.1 metres; 7.1 – 9.7 metres	2432666
				for auger extensions	1 m	Consisting of auger blades, nuts, bolts for left and right auger extension			2432450
				for auger extensions	1.045 m	Consisting of auger blades, nuts, bolts for left and right auger extension		up to 4.6 metres	2432631
			Service package for spreading augers						2198287
SUPER 2100-2 IP	0719	10 - 9999	Service package for auger blades			consisting of auger blades, nuts, bolts			2013197
				for auger extensions	0.65 m	Consisting of auger blades, nuts, bolts for left and right auger extension			2432398

FEED OF MIX

AUGERS									
Series code	Serial code	Series range	Part	Version	Length of each auger extension	Package content	Position	Working width	Part no.
SUPER 2100-2 IP	0719	10 - 9999	Service package for auger blades	for auger extensions	2.305 m	Consisting of auger blades, nuts, bolts for left and right auger extension		4.6 – 7.1 metres; 7.1 – 9.7 metres	2432666
				for auger extensions	1 m	Consisting of auger blades, nuts, bolts for left and right auger extension			2432450
				for auger extensions	1.045 m	Consisting of auger blades, nuts, bolts for left and right auger extension		up to 4.6 metres	2432631
			Service package for spreading augers						2198287
SUPER 2100-3	0819	10 - 9999	Service package for auger blades			consisting of auger blades, nuts, bolts			2013197
				for auger extensions	1 m	Consisting of auger blades, nuts, bolts for left and right auger extension			2432450

AUGERS

Series code	Serial code	Series range	Part	Version	Length of each auger extension	Package content	Position	Working width	Part no.
SUPER 2100-3	0819	10 - 9999	Service package for auger blades	for auger extensions	0.65 m	Consisting of auger blades, nuts, bolts for left and right auger extension			2432398
				for auger extensions	2.305 m	Consisting of auger blades, nuts, bolts for left and right auger extension		7.1 – 9.7 metres	2432666
				for auger extensions	1.045 m	Consisting of auger blades, nuts, bolts for left and right auger extension		up to 4.6 metres	2432631
				for auger extensions	2.305 m	Consisting of auger blades, nuts, bolts for left and right auger extension		4.6 – 7.1 metres	2432661
			Service package for spreading augers						2269382
SUPER 2100-3i	0819	10 - 9999	Service package for auger blades			consisting of auger blades, nuts, bolts			2013197

FEED OF MIX

AUGERS									
Series code	Serial code	Series range	Part	Version	Length of each auger extension	Package content	Position	Working width	Part no.
SUPER 2100-3i	0819	10 - 9999	Service package for auger blades	for auger extensions	1 m	Consisting of auger blades, nuts, bolts for left and right auger extension			2432450
				for auger extensions	0.65 m	Consisting of auger blades, nuts, bolts for left and right auger extension			2432398
				for auger extensions	2.305 m	Consisting of auger blades, nuts, bolts for left and right auger extension		7.1 – 9.7 metres	2432666
				for auger extensions	1.045 m	Consisting of auger blades, nuts, bolts for left and right auger extension		up to 4.6 metres	2432631
				for auger extensions	2.305 m	Consisting of auger blades, nuts, bolts for left and right auger extension		4.6 – 7.1 metres	2432661

AUGERS

Series code	Serial code	Series range	Part	Version	Length of each auger extension	Package content	Position	Working width	Part no.
SUPER 2100-3i	0819	10 - 9999	Service package for spreading augers						2269382
SUPER 2100-3 HD	0819	10 - 9999	Service package for auger blades	for auger extensions	1 m	Consisting of auger blades, nuts, bolts for left and right auger extension			2432828
						consisting of auger blades, nuts, bolts			2271756
				for auger extensions	0.65 m	Consisting of auger blades, nuts, bolts for left and right auger extension			2432809
				for auger extensions	2.305 m	Consisting of auger blades, nuts, bolts for left and right auger extension		7.1 – 9.7 metres	2432880
				for auger extensions	1.045 m	Consisting of auger blades, nuts, bolts for left and right auger extension		up to 4.6 metres	2432839

FEED OF MIX

AUGERS									
Series code	Serial code	Series range	Part	Version	Length of each auger extension	Package content	Position	Working width	Part no.
SUPER 2100-3 HD	0819	10 - 9999	Service package for auger blades	for auger extensions	2.305 m	Consisting of auger blades, nuts, bolts for left and right auger extension		4.6 – 7.1 metres	2432876
			Service package for spreading augers						2271754
SUPER 2100-3i HD	0819	10 - 9999	Service package for auger blades	for auger extensions	1 m	Consisting of auger blades, nuts, bolts for left and right auger extension			2432828
						consisting of auger blades, nuts, bolts			2271756
				for auger extensions	0.65 m	Consisting of auger blades, nuts, bolts for left and right auger extension			2432809
				for auger extensions	2.305 m	Consisting of auger blades, nuts, bolts for left and right auger extension		7.1 – 9.7 metres	2432880

AUGERS

Series code	Serial code	Series range	Part	Version	Length of each auger extension	Package content	Position	Working width	Part no.
SUPER 2100-3i HD	0819	10 - 9999	Service package for auger blades	for auger extensions	1.045 m	Consisting of auger blades, nuts, bolts for left and right auger extension		up to 4.6 metres	2432839
				for auger extensions	2.305 m	Consisting of auger blades, nuts, bolts for left and right auger extension		4.6 – 7.1 metres	2432876
			Service package for spreading augers						2271754
SUPER 3000-2	0874	10 - 32	Service package for auger blades			consisting of auger blades, nuts, bolts			2164933
				for auger extensions	2.305 m	Consisting of auger blades, nuts, bolts for left and right auger extension		7.1 – 9.7 metres	2432666
				for auger extensions	2.305 m	Consisting of auger blades, nuts, bolts for left and right auger extension		10.7 – 14.3 metres	2432696

FEED OF MIX

AUGERS									
Series code	Serial code	Series range	Part	Version	Length of each auger extension	Package content	Position	Working width	Part no.
SUPER 3000-2	0874	10 - 32	Service package for auger blades	for auger extensions	2.305 m	Consisting of auger blades, nuts, bolts for left and right auger extension		4.6 – 7.1 metres	2432650
				for auger extensions	1.045 m	Consisting of auger blades, nuts, bolts for left and right auger extension		up to 4.6 metres	2432631
				for auger extensions	1 m	Consisting of auger blades, nuts, bolts for left and right auger extension			2432450
				for auger extensions	0.65 m	Consisting of auger blades, nuts, bolts for left and right auger extension			2432398
			Service package for spreading augers						2164964

AUGERS

Series code	Serial code	Series range	Part	Version	Length of each auger extension	Package content	Position	Working width	Part no.
SUPER 3000-2	0874	33 - 9999	Service package for auger blades	for auger extensions	1.045 m	Consisting of auger blades, nuts, bolts for left and right auger extension		up to 4.6 metres	2432835
				for auger extensions	2.305 m	Consisting of auger blades, nuts, bolts for left and right auger extension		4.6 – 7.1 metres; 7.1 – 9.7 metres; 10.7 – 14.3 metres	2432880
				for auger extensions	1 m	Consisting of auger blades, nuts, bolts for left and right auger extension			2432814
				for auger extensions	0.65 m	Consisting of auger blades, nuts, bolts for left and right auger extension			2432702
						consisting of auger blades, nuts, bolts			2342656
			Service package for spreading augers						2409908

FEED OF MIX

AUGERS									
Series code	Serial code	Series range	Part	Version	Length of each auger extension	Package content	Position	Working width	Part no.
SUPER 3000-2 HD	0874	10 - 32	Service package for spreading augers						2342644
		10 - 9999	Service package for auger blades	for auger extensions	0.65 m	Consisting of auger blades, nuts, bolts for left and right auger extension			2432702
						consisting of auger blades, nuts, bolts			2342656
				for auger extensions	1 m	Consisting of auger blades, nuts, bolts for left and right auger extension			2432814
				for auger extensions	1.045 m	Consisting of auger blades, nuts, bolts for left and right auger extension		up to 4.6 metres	2432835
				for auger extensions	2.305 m	Consisting of auger blades, nuts, bolts for left and right auger extension		4.6 – 7.1 metres; 7.1 – 9.7 metres; 10.7 – 14.3 metres	2432880

AUGERS

Series code	Serial code	Series range	Part	Version	Length of each auger extension	Package content	Position	Working width	Part no.
SUPER 3000-2 HD	0874	33 - 9999	Service package for spreading augers						2409908
SUPER 1800-2 SJ	1182	10 - 9999	Service package for auger blades			consisting of auger blades, nuts, bolts			2013195
				for auger extensions	0.65 m	Consisting of auger blades, nuts, bolts for left and right auger extension			2432398
				for auger extensions	1.045 m	Consisting of auger blades, nuts, bolts for left and right auger extension		up to 4.6 metres	2432624
				for auger extensions	1 m	Consisting of auger blades, nuts, bolts for left and right auger extension			2432450
			Service package for spreading augers						2198422
SUPER 1800-3 SJ	1482	10 - 9999	Service package for auger blades			consisting of auger blades, nuts, bolts			2355876

FEED OF MIX

AUGERS									
Series code	Serial code	Series range	Part	Version	Length of each auger extension	Package content	Position	Working width	Part no.
SUPER 1800-3 SJ	1482	10 - 9999	Service package for auger blades	for auger extensions	0.65 m	Consisting of auger blades, nuts, bolts for left and right auger extension			2432398
				for auger extensions	2.305 m	Consisting of auger blades, nuts, bolts for left and right auger extension		4.6 – 7.1 metres	2432658
				for auger extensions	1 m	Consisting of auger blades, nuts, bolts for left and right auger extension			2432450
				for auger extensions	1.045 m	Consisting of auger blades, nuts, bolts for left and right auger extension		up to 4.6 metres	2432624
			Service package for spreading augers						2355964
SUPER 1800-3i SJ	1482	10 - 9999	Service package for auger blades			consisting of auger blades, nuts, bolts			2355876

AUGERS									
Series code	Serial code	Series range	Part	Version	Length of each auger extension	Package content	Position	Working width	Part no.
SUPER 1800-3i SJ	1482	10 - 9999	Service package for auger blades	for auger extensions	0.65 m	Consisting of auger blades, nuts, bolts for left and right auger extension			2432398
				for auger extensions	2.305 m	Consisting of auger blades, nuts, bolts for left and right auger extension		4.6 – 7.1 metres	2432658
				for auger extensions	1 m	Consisting of auger blades, nuts, bolts for left and right auger extension			2432450
				for auger extensions	1.045 m	Consisting of auger blades, nuts, bolts for left and right auger extension		up to 4.6 metres	2432624
			Service package for spreading augers						2355964

Original VÖGELE

UNDERCARRIAGE CRAWLER DRIVE

VÖGELE pavers are real powerhouses. To translate that much power into the best possible traction, a high-performance undercarriage is required.

But not all undercarriages are the same – different materials are used, different dimensions are required and a different number of components are fitted. For this reason, all the components are selected to ensure that the machine delivers maximum traction and operational reliability with the lowest possible application-related wear.

> Read more online

DRIVE SPROCKETS

On all VÖGELE tracked pavers, the power unit is friction-locked to the drive sprocket. The drive sprocket transmits the drive torque of the respective hydraulic motor to the link chain via a gearbox by engaging with the track chain, rotating it and thus setting the crawler unit in motion.

DRIVE SPROCKETS			
Series code	Serial code	Requirement	Part no.
SUPER 700	0790	2 pc.	2013454
SUPER 700-3	0890	2 pc.	2364430
SUPER 700-3i	0890	2 pc.	2364430
SUPER 800	0790	2 pc.	2013454

DRIVE SPROCKETS			
Series code	Serial code	Requirement	Part no.
SUPER 800-3	0890	2 pc.	2364430
SUPER 800-3i	0890	2 pc.	2364430
SUPER 700	0990	2 pc.	2364430
SUPER 800	0990	2 pc.	2364430
SUPER 1100-2	0811	2 pc.	2043368
SUPER 1100-3	1011, 1411	2 pc.	2043368
SUPER 1100-3i	1011, 1411	2 pc.	2043368
SUPER 1300-2	0811	2 pc.	2043368
SUPER 1300-3	1011, 1411	2 pc.	2043368
SUPER 1300-3i	1011, 1411	2 pc.	2043368
SUPER 1600-1	0782, 0982	2 pc.	4610042048
SUPER 1600-2	1182	2 pc.	4610042048
SUPER 1600-3	1582	2 pc.	2331885
SUPER 1600-3i	1582	2 pc.	2331885
SUPER 1700-3	1982	2 pc.	2080552
SUPER 1700-3i	1982	2 pc.	2080552
SUPER 1800-1	0782, 0982	2 pc.	4610042048
SUPER 1800-2	1182	2 pc.	4610042048
SUPER 1800-3	1482	2 pc.	4610042048
SUPER 1800-3i	1482	2 pc.	4610042048
SUPER 1900-2	0719	2 pc.	2038741
SUPER 1900-3	0819	2 pc.	2038741
SUPER 1900-3i	0819	2 pc.	2038741
SUPER 2000-3	1174	2 pc.	2216498
SUPER 2000-3i	1174	2 pc.	2216498
SUPER 2100-2	0719	2 pc.	2038741
SUPER 2100-2 IP	0719	2 pc.	2038741

Original VÖGELE

UNDERCARRIAGE CRAWLER DRIVE

DRIVE SPROCKETS			
Series code	Serial code	Requirement	Part no.
SUPER 2100-3	0819	2 pc.	2038741
SUPER 2100-3i	0819	2 pc.	2038741
SUPER 3000-2	0874	2 pc.	2115904
SUPER 3000-3	1074	2 pc.	2623582
SUPER 1800-2 SJ	1182	2 pc.	4610042048
SUPER 1800-3i SJ	1482	2 pc.	4610042048
MT 3000-2	0761	2 pc.	2038741
MT 3000-2i	0761	2 pc.	2038741
MT 3000-3	0861	2 pc.	2038741
MT 3000-3i	0861	2 pc.	2038741

TRACK PADS

In terms of tensile strength, abrasion resistance, elongation at break and tear resistance, genuine VÖGELE track pads achieve significantly higher performance values than imitation track pads.

TRACK PADS						
Series code	Serial code	Part	Track pad system	Package content	Require-ment	Part no.
SUPER 700	0790	Service package for track pads	Flat track pad	Track pad with 4 bolts and nuts	66 pc.	2484384
SUPER 700-3	0890	Service package for track pads	Flat track pad	Track pad with 4 bolts and nuts	66 pc.	2484384
SUPER 700-3i	0890	Service package for track pads	Flat track pad	Track pad with 4 bolts and nuts	66 pc.	2484384
SUPER 800	0790	Service package for track pads	Flat track pad	Track pad with 4 bolts and nuts	66 pc.	2484384
SUPER 800-3	0890	Service package for track pads	Flat track pad	Track pad with 4 bolts and nuts	66 pc.	2484384
SUPER 800-3i	0890	Service package for track pads	Flat track pad	Track pad with 4 bolts and nuts	66 pc.	2484384
SUPER 700	0990	Service package for track pads	Flat track pad	Track pad with 4 bolts and nuts	66 pc.	2484384

TRACK PADS

Series code	Serial code	Part	Track pad system	Package content	Require-ment	Part no.
SUPER 800	0990	Service package for track pads	Flat track pad	Track pad with 4 bolts and nuts	66 pc.	2484384
SUPER 1100-2	0811	Service package for track pads	Flat track pad	Track pad with 4 bolts and nuts	76 pc.	2443871
SUPER 1100-3	1011, 1411	Service package for track pads	Flat track pad	Track pad with 4 bolts and nuts	76 pc.	2443871
SUPER 1100-3i	1011, 1411	Service package for track pads	Flat track pad	Track pad with 4 bolts and nuts	76 pc.	2443871
SUPER 1300-2	0811	Service package for track pads	Flat track pad	Track pad with 4 bolts and nuts	76 pc.	2443871
SUPER 1300-3	1011, 1411	Service package for track pads	Flat track pad	Track pad with 4 bolts and nuts	76 pc.	2443871
SUPER 1300-3i	1011, 1411	Service package for track pads	Flat track pad	Track pad with 4 bolts and nuts	76 pc.	2443871
SUPER 1600-1	0782, 0982	Service package for track pads	Flat track pad	Track pad with 4 bolts and nuts	92 pc.	2372467
SUPER 1600-2	1182	Service package for track pads	Flat track pad	Track pad with 4 bolts and nuts	92 pc.	2372467
SUPER 1600-3	1582	Service package for track pads	Flat track pad	Track pad with 4 bolts and nuts	82 pc.	2372467
SUPER 1600-3i	1582	Service package for track pads	Flat track pad	Track pad with 4 bolts and nuts	82 pc.	2372467
SUPER 1800-1	0782, 0982	Service package for track pads	Flat track pad	Track pad with 4 bolts and nuts	92 pc.	2372467
SUPER 1800-2	1182	Service package for track pads	Flat track pad	Track pad with 4 bolts and nuts	92 pc.	2372467
SUPER 1800-3	1482	Service package for track pads	Flat track pad	Track pad with 4 bolts and nuts	92 pc.	2372467
SUPER 1800-3i	1482	Service package for track pads	Flat track pad	Track pad with 4 bolts and nuts	92 pc.	2372467
SUPER 1900-2	0719	Service package for track pads	Flat track pad	Track pad with 4 bolts and nuts	98 pc.	2372467
SUPER 1900-3	0819	Service package for track pads	Flat track pad	Track pad with 4 bolts and nuts	98 pc.	2372467
SUPER 1900-3i	0819	Service package for track pads	Flat track pad	Track pad with 4 bolts and nuts	98 pc.	2372467
SUPER 2100-2	0719	Service package for track pads	Flat track pad	Track pad with 4 bolts and nuts	98 pc.	2372467
SUPER 2100-2 IP	0719	Service package for track pads	Flat track pad	Track pad with 4 bolts and nuts	98 pc.	2372467
SUPER 2100-3	0819	Service package for track pads	Flat track pad	Track pad with 4 bolts and nuts	98 pc.	2372467
SUPER 2100-3i	0819	Service package for track pads	Flat track pad	Track pad with 4 bolts and nuts	98 pc.	2372467
SUPER 3000-2	0874	Service package for track pads	Flat track pad	Track pad with 4 bolts and nuts	108 pc.	2027993
SUPER 3000-3	1074	Service package for track pads	Flat track pad	Track pad with 4 bolts and nuts	116 pc.	2570860
SUPER 1800-2 SJ	1182	Service package for track pads	Flat track pad	Track pad with 4 bolts and nuts	92 pc.	2372467
SUPER 1800-3i SJ	1482	Service package for track pads	Flat track pad	Track pad with 4 bolts and nuts	92 pc.	2372467

Original VÖGELE

UNDERCARRIAGE CRAWLER DRIVE

TRACK PADS						
Series code	Serial code	Part	Track pad system	Package content	Require-ment	Part no.
MT 3000-2	0761	Service package for track pads	Flat track pad	Track pad with 4 bolts and nuts	98 pc.	2372467
MT 3000-2i	0761	Service package for track pads	Flat track pad	Track pad with 4 bolts and nuts	98 pc.	2372467
MT 3000-3	0861	Service package for track pads	Flat track pad	Track pad with 4 bolts and nuts	98 pc.	2372467
MT 3000-3i	0861	Service package for track pads	Flat track pad	Track pad with 4 bolts and nuts	98 pc.	2372467

TRACK CHAINS

VÖGELE track chains withstand even the toughest continuous loads in everyday use without any issue. Forged chain links made of a boron-manganese modified steel alloy exhibit exceptionally high strength and thus ensure the track chains have a long service life.

TRACK CHAINS						
Series code	Serial code	Series range	Track pad system	Type	Version	Part no.
SUPER 700	0790	10 - 9999	Flat track pad		pre-assembled with track pads	2662889
					without track pads	2033717
SUPER 700-3	0890	10 - 1064	Flat track pad		pre-assembled with track pads	2013741
					without track pads	2033717
		1065 - 9999	Flat track pad		pre-assembled with track pads	2662889
					without track pads	2668817
SUPER 700-3i	0890	10 - 1064	Flat track pad		pre-assembled with track pads	2013741
					without track pads	2033717
		1065 - 9999			without track pads	2668817
			Flat track pad		pre-assembled with track pads	2662889
SUPER 800	0790	10 - 9999			without track pads	2033717
			Flat track pad		pre-assembled with track pads	2662889

TRACK CHAINS

Series code	Serial code	Series range	Track pad system	Type	Version	Part no.
SUPER 800-3	0890	10 - 1064	Flat track pad		pre-assembled with track pads	2013741
					without track pads	2033717
		1065 - 9999	Flat track pad		pre-assembled with track pads	2662889
					without track pads	2668817
SUPER 800-3i	0890	10 - 1064			without track pads	2033717
			Flat track pad		pre-assembled with track pads	2013741
		1065 - 9999			without track pads	2668817
			Flat track pad		pre-assembled with track pads	2662889
SUPER 700	0990	10 - 9999			without track pads	2668817
			Flat track pad		pre-assembled with track pads	2662889
SUPER 800	0990	10 - 9999	Flat track pad		pre-assembled with track pads	2662889
					without track pads	2668817
SUPER 1100-2	0811	10 - 9999	Flat track pad		pre-assembled with track pads	2583021
					without track pads	2043937
SUPER 1100-3	1011	10 - 9999			without track pads	2043937
			Flat track pad		pre-assembled with track pads	2583021
	1411	10 - 9999	Flat track pad		pre-assembled with track pads	2583021
					without track pads	2043937
SUPER 1100-3i	1011, 1411	10 - 9999	Flat track pad		pre-assembled with track pads	2583021
					without track pads	2043937
SUPER 1300-2	0811	10 - 9999	Flat track pad		pre-assembled with track pads	2583021
					without track pads	2043937
SUPER 1300-3	1011, 1411	10 - 9999	Flat track pad		pre-assembled with track pads	2583021
					without track pads	2043937
SUPER 1300-3i	1011, 1411	10 - 9999	Flat track pad		pre-assembled with track pads	2583021
					without track pads	2043937

UNDERCARRIAGE CRAWLER DRIVE

TRACK CHAINS						
Series code	Serial code	Series range	Track pad system	Type	Version	Part no.
SUPER 1600-1	0782, 0982	10 - 9999			without track pads	4610302086
			Flat track pad		pre-assembled with track pads	4610302084
SUPER 1600-2	1182	10 - 9999			without track pads	4610302086
			Flat track pad		pre-assembled with track pads	4610302084
SUPER 1600-3	1582	10 - 9999			without track pads	2335404
			Flat track pad		pre-assembled with track pads	2332089
SUPER 1600-3i	1582	10 - 9999			without track pads	2335404
			Flat track pad		pre-assembled with track pads	2332089
SUPER 1700-3	1982	10 - 9999		Slicks	without track pads	2375795
SUPER 1700-3i	1982	10 - 9999		Slicks	without track pads	2375795
SUPER 1800-1	0782, 0982	10 - 9999			without track pads	4610302086
			Flat track pad		pre-assembled with track pads	4610302084
SUPER 1800-2	1182	10 - 9999			without track pads	4610302086
			Flat track pad		pre-assembled with track pads	4610302084
SUPER 1800-3	1482	10 - 9999			without track pads	4610302086
			Flat track pad		pre-assembled with track pads	4610302084
SUPER 1800-3i	1482	10 - 9999			without track pads	4610302086
			Flat track pad		pre-assembled with track pads	4610302084
SUPER 1900-2	0719	10 - 9999	Flat track pad		pre-assembled with track pads	2252658
					without track pads	2056009
SUPER 1900-3	0819	10 - 9999	Flat track pad		pre-assembled with track pads	2252658
					without track pads	2056009
SUPER 1900-3i	0819	10 - 9999	Flat track pad		pre-assembled with track pads	2252658
					without track pads	2056009
SUPER 2000-3	1174	10 - 9999			without track pads	2041065
SUPER 2000-3i	1174	10 - 9999			without track pads	2041065

TRACK CHAINS

Series code	Serial code	Series range	Track pad system	Type	Version	Part no.
SUPER 2100-2	0719	10 - 9999	Flat track pad		pre-assembled with track pads	2252658
					without track pads	2056009
SUPER 2100-2 IP	0719	10 - 9999	Flat track pad		pre-assembled with track pads	2252658
					without track pads	2056009
SUPER 2100-3	0819	10 - 9999	Flat track pad		pre-assembled with track pads	2252658
					without track pads	2056009
SUPER 2100-3i	0819	10 - 9999	Flat track pad		pre-assembled with track pads	2252658
					without track pads	2056009
SUPER 3000-2	0874	10 - 9999			without track pads	2120878
			Flat track pad		pre-assembled with track pads	2120854
SUPER 3000-3	1074	10 - 9999	Flat track pad		pre-assembled with track pads	2623626
					without track pads	2687152
SUPER 1800-2 SJ	1182	10 - 9999			without track pads	4610302086
			Flat track pad		pre-assembled with track pads	4610302084
SUPER 1800-3i SJ	1482	10 - 9999			without track pads	4610302086
			Flat track pad		pre-assembled with track pads	4610302084
MT 3000-2	0761	10 - 9999	Flat track pad		pre-assembled with track pads	2252658
					without track pads	2056009
MT 3000-3	0861	10 - 9999	Flat track pad		pre-assembled with track pads	2252658
					without track pads	2056009
MT 3000-3i	0861	10 - 9999	Flat track pad		pre-assembled with track pads	2252658
					without track pads	2056009

Original VÖGELE

UNDERCARRIAGE CRAWLER DRIVE

TRACK ROLLERS

To ensure that the crawler unit chain can move safely and reliably even under the heaviest loads, VÖGELE track rollers are manufactured to be particularly robust and precisely tailored to the track unit system.

TRACK ROLLERS				
Series code	Serial code	Diameter	Requirement	Part no.
SUPER 700	0790	130 mm	12 pc.	2013745
SUPER 700-3	0890	130 mm	12 pc.	2013745
SUPER 700-3i	0890	130 mm	12 pc.	2013745
SUPER 800	0790	130 mm	12 pc.	2013745
SUPER 800-3	0890	130 mm	12 pc.	2013745
SUPER 800-3i	0890	130 mm	12 pc.	2013745
SUPER 700	0990	130 mm	12 pc.	2013745
SUPER 800	0990	130 mm	12 pc.	2013745
SUPER 1100-2	0811	135 mm	14 pc.	4611340027
SUPER 1100-3	1011, 1411	135 mm	14 pc.	2307941
SUPER 1100-3i	1011, 1411	135 mm	14 pc.	2307941
SUPER 1300-2	0811	135 mm	14 pc.	4611340027
SUPER 1300-3	1011, 1411	135 mm	14 pc.	2307941
SUPER 1300-3i	1011, 1411	135 mm	14 pc.	2307941
SUPER 1600-1	0782, 0982	156 mm	10 pc.	4611340028
SUPER 1600-2	1182	180 mm	6 pc.	4611340029
		156 mm	10 pc.	4611340028
SUPER 1600-3	1582	90 mm	4 pc.	2306186
		180 mm	6 pc.	4611340029
		156 mm	10 pc.	4611340028
SUPER 1600-3i	1582	90 mm	4 pc.	2306186

TRACK ROLLERS				
Series code	Serial code	Diameter	Requirement	Part no.
SUPER 1600-3i	1582	180 mm	6 pc.	4611340029
		156 mm	10 pc.	4611340028
SUPER 1700-3	1982	270 mm	24 pc.	2080543
SUPER 1700-3i	1982	270 mm	24 pc.	2080543
SUPER 1800-1	0782, 0982	180 mm	6 pc.	4611340029
SUPER 1800-2	1182	180 mm	6 pc.	4611340029
		156 mm	10 pc.	4611340028
SUPER 1800-3	1482	90 mm	4 pc.	2306186
		180 mm	8 pc.	4611340029
		156 mm	10 pc.	4611340028
SUPER 1800-3i	1482	90 mm	4 pc.	2306186
		180 mm	8 pc.	4611340029
		156 mm	10 pc.	4611340028
SUPER 1900-2	0719	156 mm	12 pc.	2038734
		180 mm	8 pc.	2038715
SUPER 1900-3	0819	180 mm	8 pc.	2038715
		98 mm	6 pc.	2199919
		156 mm	14 pc.	2038734
SUPER 1900-3i	0819	180 mm	8 pc.	2038715
		98 mm	6 pc.	2199919
		156 mm	14 pc.	2038734
SUPER 2000-3	1174	300 mm	24 pc.	2184765
SUPER 2000-3i	1174	300 mm	24 pc.	2184765
SUPER 2100-2	0719	156 mm	12 pc.	2038734
		180 mm	8 pc.	2038715
SUPER 2100-2 IP	0719	156 mm	12 pc.	2038734
		180 mm	8 pc.	2038715

UNDERCARRIAGE CRAWLER DRIVE

TRACK ROLLERS				
Series code	Serial code	Diameter	Requirement	Part no.
SUPER 2100-3	0819	180 mm	8 pc.	2038715
		98 mm	6 pc.	2199919
		156 mm	14 pc.	2038734
SUPER 2100-3i	0819	180 mm	8 pc.	2038715
		98 mm	6 pc.	2199919
		156 mm	14 pc.	2038734
SUPER 3000-2	0874	180 mm	6 pc.	2133094
		180 mm	16 pc.	2038715
SUPER 3000-3	1074	180 mm	18 pc.	2038715
		98 mm	6 pc.	2199919
		180 mm	6 pc.	2133094
SUPER 1800-2 SJ	1182	180 mm	6 pc.	4611340029
		156 mm	10 pc.	4611340028
SUPER 1800-3i SJ	1482	90 mm	4 pc.	2306186
		180 mm	8 pc.	4611340029
		156 mm	10 pc.	4611340028
MT 3000-2	0761	180 mm	12 pc.	2225787
		180 mm	8 pc.	2038715
MT 3000-3	0861	180 mm	12 pc.	2225787
		180 mm	8 pc.	2038715
		98 mm	6 pc.	2199919
MT 3000-3i	0861	180 mm	12 pc.	2225787
		98 mm	6 pc.	2199919
		180 mm	8 pc.	2038715

IDLERS

The robust VÖGELE idler guides and tensions the track chain, reliably keeping it in the proper position.

IDLERS				
Series code	Serial code	Part	Requirement	Part no.
SUPER 700	0790	Idler	2 pc.	2030568
SUPER 700-3	0890	Idler	2 pc.	2030568
SUPER 700-3i	0890	Idler	2 pc.	2030568
SUPER 800	0790	Idler	2 pc.	2030568
SUPER 800-3	0890	Idler	2 pc.	2030568
SUPER 800-3i	0890	Idler	2 pc.	2030568
SUPER 700	0990	Idler	2 pc.	2030568
SUPER 800	0990	Idler	2 pc.	2030568
SUPER 1100-2	0811	Idler	2 pc.	2043929
SUPER 1100-3	1011, 1411	Idler	2 pc.	2043929
SUPER 1100-3i	1011, 1411	Idler	2 pc.	2043929
SUPER 1300-2	0811	Idler	2 pc.	2043929
SUPER 1300-3	1011, 1411	Idler	2 pc.	2043929
SUPER 1300-3i	1011, 1411	Idler	2 pc.	2043929
SUPER 1600-1	0782, 0982	Idler	2 pc.	2008160
SUPER 1600-2	1182	Idler	2 pc.	2008160
SUPER 1600-3	1582	Idler	2 pc.	2008160
SUPER 1600-3i	1582	Idler	2 pc.	2008160
SUPER 1700-3	1982	Idler	4 pc.	2080556
SUPER 1700-3i	1982	Idler	4 pc.	2080556
SUPER 1800-1	0782, 0982	Idler	2 pc.	2008160

UNDERCARRIAGE CRAWLER DRIVE

IDLERS				
Series code	Serial code	Part	Requirement	Part no.
SUPER 1800-2	1182	Idler	2 pc.	2008160
SUPER 1800-3	1482	Idler	2 pc.	2008160
SUPER 1800-3i	1482	Idler	2 pc.	2008160
SUPER 1900-2	0719	Idler	2 pc.	2038731
SUPER 1900-3i	0819	Idler	2 pc.	2038731
SUPER 2000-3	1174	Idler	4 pc.	2184767
SUPER 2000-3i	1174	Idler	4 pc.	2184767
SUPER 2100-2	0719	Idler	2 pc.	2038731
SUPER 2100-2 IP	0719	Idler	2 pc.	2038731
SUPER 2100-3i	0819	Idler	2 pc.	2038731
SUPER 3000-2	0874	Idler	1 pc.	2134780
SUPER 3000-3	1074	Idler	2 pc.	2639347
SUPER 1800-2 SJ	1182	Idler	2 pc.	2008160
SUPER 1800-3i SJ	1482	Idler	2 pc.	2008160
MT 3000-2	0761	Idler	2 pc.	2038731
MT 3000-3	0861	Idler	2 pc.	2038731
MT 3000-3i	0861	Idler	2 pc.	2038731

TENSIONER UNITS

The shock-resistant and maintenance-free tensioner units ensure that the track always has the proper tensioning pressure.

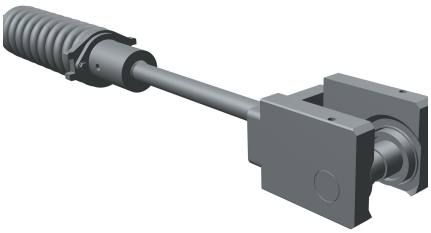

TENSIONER UNITS					
Series code	Serial code	Series range	Package includes	Requirement	Part no.
SUPER 700	0790	10 - 9999		2 pc.	2030566
SUPER 700-3	0890	10 - 1162		2 pc.	2030566
		1163 - 9999		2 pc.	2682057
SUPER 700-3i	0890	10 - 1162		2 pc.	2030566
		1163 - 9999		2 pc.	2682057
SUPER 800	0790	10 - 9999		2 pc.	2030566
SUPER 800-3	0890	10 - 1162		2 pc.	2030566
		1163 - 9999		2 pc.	2682057
SUPER 800-3i	0890	10 - 1162		2 pc.	2030566
		1163 - 9999		2 pc.	2682057
SUPER 700	0990	10 - 9999		2 pc.	2682057
SUPER 800	0990	10 - 9999		2 pc.	2682057
SUPER 1100-2	0811	10 - 9999		2 pc.	2043932
SUPER 1100-3	1011, 1411	10 - 9999		2 pc.	2043932
SUPER 1100-3i	1011, 1411	10 - 9999		2 pc.	2043932
SUPER 1300-2	0811	10 - 9999		2 pc.	2043932
SUPER 1300-3	1011, 1411	10 - 9999		2 pc.	2043932
SUPER 1300-3i	1011, 1411	10 - 9999		2 pc.	2043932
SUPER 1600-1	0782, 0982	10 - 9999		2 pc.	2008163
				2 pc.	2008164

UNDERCARRIAGE CRAWLER DRIVE

TENSIONER UNITS					
Series code	Serial code	Series range	Package includes	Requirement	Part no.
SUPER 1600-2	1182	10 - 9999		2 pc.	2008163
				2 pc.	2008164
SUPER 1600-3	1582	10 - 9999		2 pc.	2008163
				2 pc.	2008164
SUPER 1600-3i	1582	10 - 9999		2 pc.	2008163
				2 pc.	2008164
SUPER 1800-1	0782, 0982	10 - 9999		2 pc.	2008163
				2 pc.	2008164
SUPER 1800-2	1182	10 - 9999		2 pc.	2008163
				2 pc.	2008164
SUPER 1800-3	1482	10 - 9999		2 pc.	2008163
				2 pc.	2008164
SUPER 1800-3i	1482	10 - 9999		2 pc.	2008163
				2 pc.	2008164
SUPER 1900-2	0719	10 - 9999		2 pc.	2040803
			incl. pressure rod	2 pc.	2038732
SUPER 1900-3i	0819	10 - 9999		2 pc.	2040803
			incl. pressure rod	2 pc.	2038732
SUPER 2100-2	0719	10 - 9999		2 pc.	2040803
			incl. pressure rod	2 pc.	2038732
SUPER 2100-2 IP	0719	10 - 9999		2 pc.	2040803
			incl. pressure rod	2 pc.	2038732
SUPER 2100-3i	0819	10 - 9999		2 pc.	2040803
			incl. pressure rod	2 pc.	2038732
SUPER 3000-2	0874	10 - 9999		1 pc.	2119399
				1 pc.	2119311

TENSIONER UNITS

Series code	Serial code	Series range	Package includes	Requirement	Part no.
SUPER 3000-3	1074	10 - 9999		2 pc.	2623584
				2 pc.	2623579
SUPER 1800-2 SJ	1182	10 - 9999		2 pc.	2008163
				2 pc.	2008164
SUPER 1800-3i SJ	1482	10 - 9999		2 pc.	2008163
				2 pc.	2008164
MT 3000-2	0761	10 - 9999		2 pc.	2040803
			incl. pressure rod	2 pc.	2038732
MT 3000-3	0861	10 - 9999		2 pc.	2040803
			incl. pressure rod	2 pc.	2038732
MT 3000-3i	0861	10 - 9999		2 pc.	2040803
			incl. pressure rod	2 pc.	2038732

Original VÖGELE

UNDERCARRIAGE WHEEL DRIVE

Wheeled pavers have to satisfy the highest demands in terms of manoeuvrability, smooth running and tractive power. To ensure that they meet these requirements on all sub-bases and in all weather conditions, VÖGELE has teamed up with renowned suppliers to optimise the tyres for their pavers. This results in extremely smooth running during slab paving, powerful traction and a long service life for tyres and undercarriage.

> Read more online

WHEELS

Thanks to their special rubber compound, VÖGELE wheels are extremely reliable on a wide variety of sub-bases.

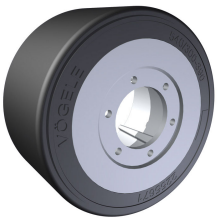

WHEELS				
Series code	Serial code	Part	Requirement	Part no.
SUPER 1103-2	0911	Complete wheel	**Requirement | Position | Drive** 4 pc. | front | without drive; 2 pc. | front, first front axle | with drive 6x4	2359522
			Requirement | Position | Drive 2 pc. | front, second front axle | with drive 6x4	2359526

WHEELS				
Series code	Serial code	Part	Requirement	Part no.
SUPER 1103-3	1111, 1511	Complete wheel	**Requirement | Position | Drive** 4 pc. | front | without drive; 2 pc. | front, first front axle | with drive 6x4	2359522
			Requirement | Position | Drive 2 pc. | front, second front axle | with drive 6x4	2359526
SUPER 1103-3i	1111	Complete wheel	**Requirement | Position | Drive** 4 pc. | front | without drive; 2 pc. | front, first front axle | with drive 6x4	2359522
			Requirement | Position | Drive 2 pc. | front, second front axle | with drive 6x4	2359526
	1511	Complete wheel	**Requirement | Position | Drive** 2 pc. | front, second front axle | with drive 6x4	2359526
			Requirement | Position | Drive 4 pc. | front | without drive; 2 pc. | front, first front axle | with drive 6x4	2359522
SUPER 1303-2	0911	Complete wheel	**Requirement | Position | Drive** 2 pc. | front, second front axle | with drive 6x4	2359526
			Requirement | Position | Drive 4 pc. | front | without drive; 2 pc. | front, first front axle | with drive 6x4	2359522
SUPER 1303-3	1111	Complete wheel	**Requirement | Position | Drive** 2 pc. | front, second front axle | with drive 6x4	2359526
			Requirement | Position | Drive 4 pc. | front | without drive; 2 pc. | front, first front axle | with drive 6x4	2359522
	1511	Complete wheel	**Requirement | Position | Drive** 4 pc. | front | without drive; 2 pc. | front, first front axle | with drive 6x4	2359522
			Requirement | Position | Drive 2 pc. | front, second front axle | with drive 6x4	2359526
SUPER 1303-3i	1111, 1511	Complete wheel	**Requirement | Position | Drive** 4 pc. | front | without drive; 2 pc. | front, first front axle | with drive 6x4	2359522
			Requirement | Position | Drive 2 pc. | front, second front axle | with drive 6x4	2359526
SUPER 1603-1	0783	Complete wheel	**Requirement | Position | Drive** 4 pc. | front | without drive; 4 pc. | front | with drive 6x4; 4 pc. | front | with drive 6x6	2359496
SUPER 1603-2	0883	Complete wheel	**Requirement | Position | Drive** 4 pc. | front | without drive; 4 pc. | front | with drive 6x4; 4 pc. | front | with drive 6x6	2359496
SUPER 1603-3i	1183	Complete wheel	**Requirement | Position | Drive** 4 pc. | front | without drive; 4 pc. | front | with drive 6x4; 4 pc. | front | with drive 6x6	2359496

UNDERCARRIAGE WHEEL DRIVE

WHEELS				
Series code	Serial code	Part	Requirement	Part no.
SUPER 1603-3	1183	Complete wheel	**Requirement | Position | Drive** 4 pc. | front | without drive; 4 pc. | front | with drive 6x4; 4 pc. | front | with drive 6x6	2359496
SUPER 1703-3	1283	Complete wheel	**Requirement | Position | Drive** 4 pc. | front | with drive 6x4; 4 pc. | front | with drive 6x6	2359496
SUPER 1703-3i	1283	Complete wheel	**Requirement | Position | Drive** 4 pc. | front | with drive 6x4; 4 pc. | front | with drive 6x6	2359496
SUPER 1803-1	0783	Complete wheel	**Requirement | Position | Drive** 4 pc. | front | without drive; 4 pc. | front | with drive 6x4; 4 pc. | front | with drive 6x6	2359496
SUPER 1803-2	0883	Complete wheel	**Requirement | Position | Drive** 4 pc. | front | without drive; 4 pc. | front | with drive 6x4; 4 pc. | front | with drive 6x6	2359496
SUPER 1803-3	1083	Complete wheel	**Requirement | Position | Drive** 4 pc. | front | without drive; 4 pc. | front | with drive 6x4; 4 pc. | front | with drive 6x6	2359496
SUPER 1803-3i	1083	Complete wheel	**Requirement | Position | Drive** 4 pc. | front | without drive; 4 pc. | front | with drive 6x4; 4 pc. | front | with drive 6x6	2359496
SUPER 2003-3	0975	Complete wheel	**Requirement | Position | Drive** 4 pc. | front | without drive; 4 pc. | front | with drive 6x4; 4 pc. | front | with drive 6x6	2359496
SUPER 2003-3i	0975	Complete wheel	**Requirement | Position | Drive** 4 pc. | front | without drive; 4 pc. | front | with drive 6x4; 4 pc. | front | with drive 6x6	2359496

TYRES

VÖGELE tread tyres offer superb traction on loose sub-bases.

TYRES			
Series code	Serial code	Requirement	Part no.
SUPER 1103-2	0911	**Requirement | Position | Version** 2 pc. | rear | Rim	2934823
		Requirement | Position | Version 2 pc. | rear | Rubber tyre	2889901
		Requirement | Position | Version 2 pc. | rear | Complete tyre	2934827
SUPER 1103-3	1111, 1511	**Requirement | Position | Version** 2 pc. | rear | Rim	2934823
		Requirement | Position | Version 2 pc. | rear | Rubber tyre	2889901
		Requirement | Position | Version 2 pc. | rear | Complete tyre	2934827
SUPER 1103-3i	1111, 1511	**Requirement | Position | Version** 2 pc. | rear | Rim	2934823
		Requirement | Position | Version 2 pc. | rear | Rubber tyre	2889901
		Requirement | Position | Version 2 pc. | rear | Complete tyre	2934827
SUPER 1303-2	0911	**Requirement | Position | Version** 2 pc. | rear | Rim	2934823
		Requirement | Position | Version 2 pc. | rear | Rubber tyre	2889901
		Requirement | Position | Version 2 pc. | rear | Complete tyre	2934827
SUPER 1303-3	1111, 1511	**Requirement | Position | Version** 2 pc. | rear | Rim	2934823
		Requirement | Position | Version 2 pc. | rear | Rubber tyre	2889901
		Requirement | Position | Version 2 pc. | rear | Complete tyre	2934827
SUPER 1303-3i	1111, 1511	**Requirement | Position | Version** 2 pc. | rear | Rim	2934823
		Requirement | Position | Version 2 pc. | rear | Rubber tyre	2889901
		Requirement | Position | Version 2 pc. | rear | Complete tyre	2934827
SUPER 1603-1	0783	**Requirement | Position | Version** 2 pc. | rear | Rim	4606162083
		Requirement | Position | Version 2 pc. | rear | Complete tyre	4602302084
		Requirement | Position | Version 2 pc. | rear | Rubber tyre	4602302072

UNDERCARRIAGE WHEEL DRIVE

TYRES			
Series code	Serial code	Requirement	Part no.
SUPER 1603-2	0883	**Requirement | Position | Version** 2 pc. | rear | Rim	4606162083
		Requirement | Position | Version 2 pc. | rear | Complete tyre	4602302084
		Requirement | Position | Version 2 pc. | rear | Rubber tyre	4602302072
SUPER 1603-3i	1183	**Requirement | Position | Version** 2 pc. | rear | Rim	2273314
		Requirement | Position | Version 2 pc. | rear | Complete tyre	2355218
		Requirement | Position | Version 2 pc. | rear | Rubber tyre	2355217
SUPER 1603-3	1183	**Requirement | Position | Version** 2 pc. | rear | Rim	2273314
		Requirement | Position | Version 2 pc. | rear | Complete tyre	2355218
		Requirement | Position | Version 2 pc. | rear | Rubber tyre	2355217
SUPER 1703-3	1283	**Requirement | Position | Version** 2 pc. | rear | Rim	2273314
		Requirement | Position | Version 2 pc. | rear | Complete tyre	2500017
		Requirement | Position | Version 2 pc. | rear | Rubber tyre	2098209
SUPER 1703-3i	1283	**Requirement | Position | Version** 2 pc. | rear | Rim	2273314
		Requirement | Position | Version 2 pc. | rear | Complete tyre	2500017
		Requirement | Position | Version 2 pc. | rear | Rubber tyre	2098209
SUPER 1803-1	0783	**Requirement | Position | Version** 2 pc. | rear | Rim	4606162083
		Requirement | Position | Version 2 pc. | rear | Complete tyre	4602302084
		Requirement | Position | Version 2 pc. | rear | Rubber tyre	4602302072
SUPER 1803-2	0883	**Requirement | Position | Version** 2 pc. | rear | Rim	4606162083
		Requirement | Position | Version 2 pc. | rear | Complete tyre	4602302084
		Requirement | Position | Version 2 pc. | rear | Rubber tyre	4602302072
SUPER 1803-3	1083	**Requirement | Position | Version** 2 pc. | rear | Rim	2273314
		Requirement | Position | Version 2 pc. | rear | Rubber tyre	4602302072
		Requirement | Position | Version 2 pc. | rear | Complete tyre	2247463
SUPER 1803-3i	1083	**Requirement | Position | Version** 2 pc. | rear | Rim	2273314
		Requirement | Position | Version 2 pc. | rear | Rubber tyre	4602302072
		Requirement | Position | Version 2 pc. | rear | Complete tyre	2247463

TYRES			
Series code	Serial code	Requirement	Part no.
SUPER 2003-3	0975	**Requirement | Position | Version** 2 pc. | rear | Rim	2340184
		Requirement | Position | Version 2 pc. | rear | Complete tyre	2340458
		Requirement | Position | Version 2 pc. | rear | Rubber tyre	2326084
SUPER 2003-3i	0975	**Requirement | Position | Version** 2 pc. | rear | Rim	2340184
		Requirement | Position | Version 2 pc. | rear | Complete tyre	2340458
		Requirement | Position | Version 2 pc. | rear | Rubber tyre	2326084

Original VÖGELE

GRADE AND SLOPE CONTROL SYSTEM

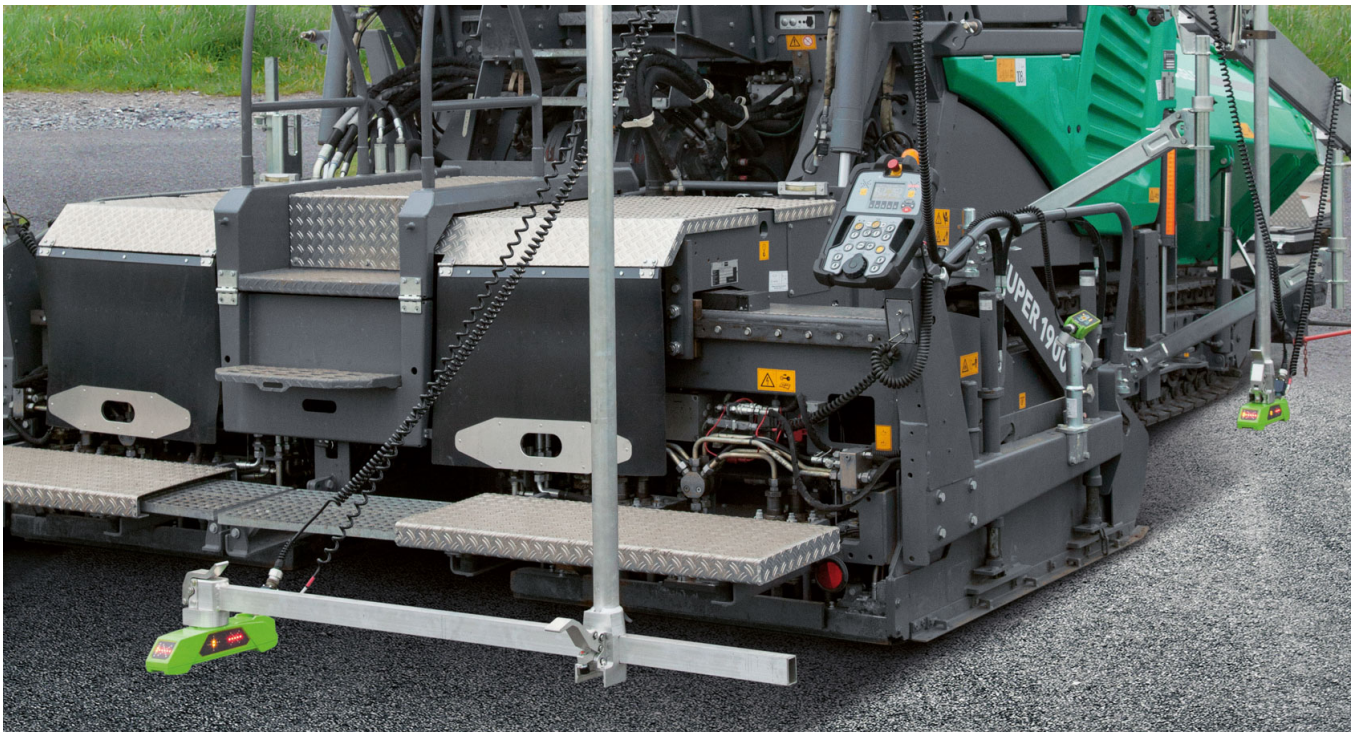

VÖGELE NIVELTRONIC Basic and NIVELTRONIC Plus can be used to precisely adjust the paving thickness over the entire distance by scanning a defined reference thickness, thus ensuring that the required target thickness is achieved exactly – irrespective of the grade of the sub-base. NIVELTRONIC Basic and NIVELTRONIC Plus are unparalleled grade and slope control systems that lay the foundation for efficient paving true to line and level on any sub-base. Perfect compatibility between the machine and the automatic grade and slope control system guarantee maximum quality.

> Read more online

PAVER OPERATOR'S CONSOLE

The grade and slope control and screed paver operator's consoles can used to monitor the actual and nominal grade and slope control values as well as to operate the basic functions of the screed.

PAVER OPERATOR'S CONSOLE				
Series code	Serial code	Part	Version	Part no.
SUPER 700	0790	Slope sensor adapter	Grade and slope control system	2041684
		Control Panel	Screed	2014186
			Grade and slope control system	2024191

PAVER OPERATOR'S CONSOLE				
Series code	Serial code	Part	Version	Part no.
SUPER 700-3	0890	Control Panel	Screed	2304890
			Grade and slope control system	2304891
SUPER 700-3i	0890	Control Panel	Screed	2304890
			Grade and slope control system	2304891
SUPER 800	0790	Slope sensor adapter	Grade and slope control system	2041684
		Control Panel	Grade and slope control system	2024191
			Screed	2014186
SUPER 800-3	0890	Control Panel	Screed	2304890
			Grade and slope control system	2304891
SUPER 800-3i	0890	Control Panel	Screed	2304890
			Grade and slope control system	2304891
SUPER 700	0990	Control Panel	Grade and slope control system	2304891
			Screed	2304890
SUPER 800	0990	Control Panel	Grade and slope control system	2304891
			Screed	2304890
SUPER 1100-2	0811	External operating station		2566683
SUPER 1100-3	1011, 1411	External operating station		2724455
SUPER 1100-3i	1011, 1411	External operating station		2724455
SUPER 1103-2	0911	External operating station		2566683
SUPER 1103-3	1111, 1511	External operating station		2724455
SUPER 1103-3i	1111, 1511	External operating station		2724455
SUPER 1300-2	0811	External operating station		2566683
SUPER 1300-3	1011, 1411	External operating station		2724455
SUPER 1300-3i	1011, 1411	External operating station		2724455
SUPER 1303-2	0911	External operating station		2566683
SUPER 1303-3	1111, 1511	External operating station		2724455
SUPER 1303-3i	1111, 1511	External operating station		2724455

GRADE AND SLOPE CONTROL SYSTEM

PAVER OPERATOR'S CONSOLE				
Series code	Serial code	Part	Version	Part no.
SUPER 1600-1	0782	External operating station		4603014013
SUPER 1600-2	1182	External operating station		2566683
SUPER 1600-3	1582	External operating station		2724455
SUPER 1600-3i	1582	External operating station		2724455
SUPER 1603-1	0783	External operating station		4603014013
SUPER 1603-2	0883	External operating station		2566683
SUPER 1603-3i	1183	External operating station		2724455
SUPER 1603-3	1183	External operating station		2724455
SUPER 1700-3	1982	Control Panel	Grade and slope control system	2724456
			Screed	2522746
SUPER 1700-3i	1982	Control Panel	Grade and slope control system	2724456
			Screed	2522746
SUPER 1703-3	1283	Control Panel	Grade and slope control system	2724456
			Screed	2522746
SUPER 1703-3i	1283	Control Panel	Grade and slope control system	2724456
			Screed	2522746
SUPER 1800-1	0782	External operating station		4603014013
SUPER 1800-2	1182	External operating station		2566683
SUPER 1800-3	1482	External operating station		2724455
SUPER 1800-3i	1482	External operating station		2724455
SUPER 1803-1	0783	External operating station		4603014013
SUPER 1803-2	0883	External operating station		2566683
SUPER 1803-3	1083	External operating station		2724455
SUPER 1803-3i	1083	External operating station		2724455
SUPER 1900-2	0719	External operating station		2566683
SUPER 1900-3	0819	External operating station		2724455
SUPER 1900-3i	0819	External operating station		2724455

PAVER OPERATOR'S CONSOLE				
Series code	Serial code	Part	Version	Part no.
SUPER 2000-3	1174	Control Panel	Grade and slope control system	2724456
			Screed	2522746
SUPER 2000-3i	1174	Control Panel	Grade and slope control system	2724456
			Screed	2522746
SUPER 2003-3	0975	Control Panel	Grade and slope control system	2724456
			Screed	2522746
SUPER 2003-3i	0975	Control Panel	Screed	2522746
			Grade and slope control system	2724456
SUPER 2100-2	0719	External operating station		2566683
SUPER 2100-2 IP	0719	External operating station		2566683
SUPER 2100-3	0819	External operating station		2724455
SUPER 2100-3i	0819	External operating station		2724455
SUPER 3000-2	0874	External operating station		2566683
SUPER 3000-3	1074	External operating station		2566683
SUPER 1800-2 SJ	1182	External operating station		2566683
SUPER 1800-3 SJ	1482	External operating station		2724455
SUPER 1800-3i SJ	1482	External operating station		2724455

Original VÖGELE

GRADE AND SLOPE CONTROL SYSTEM

SENSORS

During grade and slope control, a variety of sensors from VÖGELE ensure that the actual values are accurately scanned. Sonic sensors, the Big MultiPlex Ski, slope sensors and mechanical grade sensors all play an extremely important role in achieving perfect asphalt paving.

SENSORS			
Series code	Serial code	Part	Part no.
SUPER 700	0790	Mechanical level sensor	2472560017
		Slope sensor	2462560026
		Ultrasonic sensor	2197266
SUPER 700-3	0890	Mechanical level sensor	2484805
		Slope sensor	2484825
		Ultrasonic sensor	2431211
SUPER 700-3i	0890	Mechanical level sensor	2484805
		Slope sensor	2484825
		Ultrasonic sensor	2431211
SUPER 800	0790	Mechanical level sensor	2472560017
		Slope sensor	2462560026
		Ultrasonic sensor	2197266
SUPER 800-3	0890	Mechanical level sensor	2484805
		Slope sensor	2484825
		Ultrasonic sensor	2431211
SUPER 800-3i	0890	Mechanical level sensor	2484805
		Slope sensor	2484825
		Ultrasonic sensor	2431211
SUPER 700	0990	Mechanical level sensor	2484805
		Slope sensor	2484825
		Ultrasonic sensor	2431211

SENSORS			
Series code	Serial code	Part	Part no.
SUPER 800	0990	Mechanical level sensor	2484805
		Slope sensor	2484825
		Ultrasonic sensor	2431211
SUPER 1100-2	0811	Mechanical level sensor	2039585
		Slope sensor	2462560026
		Ultrasonic sensor	2197266
SUPER 1100-3	1011, 1411	Mechanical level sensor	2484805
		Slope sensor	2484825
		Ultrasonic sensor	2431211
SUPER 1100-3i	1011, 1411	Mechanical level sensor	2484805
		Slope sensor	2484825
		Ultrasonic sensor	2431211
SUPER 1103-2	0911	Mechanical level sensor	2039585
		Slope sensor	2462560026
		Ultrasonic sensor	2197266
SUPER 1103-3	1111, 1511	Mechanical level sensor	2484805
		Slope sensor	2484825
		Ultrasonic sensor	2431211
SUPER 1103-3i	1111, 1511	Mechanical level sensor	2484805
		Slope sensor	2484825
		Ultrasonic sensor	2431211
SUPER 1300-2	0811	Mechanical level sensor	2039585
		Slope sensor	2462560026
		Ultrasonic sensor	2197266
SUPER 1300-3	1011, 1411	Mechanical level sensor	2484805
		Slope sensor	2484825
		Ultrasonic sensor	2431211

GRADE AND SLOPE CONTROL SYSTEM

SENSORS			
Series code	Serial code	Part	Part no.
SUPER 1300-3i	1011, 1411	Mechanical level sensor	2484805
		Slope sensor	2484825
		Ultrasonic sensor	2431211
SUPER 1303-2	0911	Mechanical level sensor	2039585
		Slope sensor	2462560026
		Ultrasonic sensor	2197266
SUPER 1303-3	1111, 1511	Mechanical level sensor	2484805
		Slope sensor	2484825
		Ultrasonic sensor	2431211
SUPER 1303-3i	1111, 1511	Mechanical level sensor	2484805
		Slope sensor	2484825
		Ultrasonic sensor	2431211
SUPER 1600-1	0782, 0982	Mechanical level sensor	2472560017
		Slope sensor	2462560026
		Ultrasonic sensor	2197266
SUPER 1600-2	1182	Mechanical level sensor	2039585
		Slope sensor	2462560026
		Ultrasonic sensor	2197266
SUPER 1600-3	1582	Mechanical level sensor	2484805
		Slope sensor	2484825
		Ultrasonic sensor	2431211
SUPER 1600-3i	1582	Mechanical level sensor	2484805
		Slope sensor	2484825
		Ultrasonic sensor	2431211
SUPER 1603-1	0783	Mechanical level sensor	2472560017
		Slope sensor	2462560026
		Ultrasonic sensor	2197266

SENSORS			
Series code	Serial code	Part	Part no.
SUPER 1603-2	0883	Mechanical level sensor	2039585
		Slope sensor	2462560026
		Ultrasonic sensor	2197266
SUPER 1603-3i	1183	Mechanical level sensor	2484805
		Slope sensor	2484825
		Ultrasonic sensor	2431211
SUPER 1603-3	1183	Mechanical level sensor	2484805
		Slope sensor	2484825
		Ultrasonic sensor	2431211
SUPER 1700-3	1982	Mechanical level sensor	2484805
		Slope sensor	2484825
		Ultrasonic sensor	2431211
SUPER 1700-3i	1982	Mechanical level sensor	2484805
		Slope sensor	2484825
		Ultrasonic sensor	2431211
SUPER 1703-3	1283	Mechanical level sensor	2484805
		Slope sensor	2484825
		Ultrasonic sensor	2431211
SUPER 1703-3i	1283	Mechanical level sensor	2484805
		Slope sensor	2484825
		Ultrasonic sensor	2431211
SUPER 1800-1	0782, 0982	Mechanical level sensor	2472560017
		Slope sensor	2462560026
		Ultrasonic sensor	2197266
SUPER 1800-2	1182	Mechanical level sensor	2039585
		Slope sensor	2462560026
		Ultrasonic sensor	2197266

GRADE AND SLOPE CONTROL SYSTEM

SENSORS			
Series code	Serial code	Part	Part no.
SUPER 1800-3	1482	Mechanical level sensor	2484805
		Slope sensor	2484825
		Ultrasonic sensor	2431211
SUPER 1800-3i	1482	Mechanical level sensor	2484805
		Slope sensor	2484825
		Ultrasonic sensor	2431211
SUPER 1803-1	0783	Mechanical level sensor	2472560017
		Slope sensor	2462560026
		Ultrasonic sensor	2197266
SUPER 1803-2	0883	Mechanical level sensor	2039585
		Slope sensor	2462560026
		Ultrasonic sensor	2197266
SUPER 1803-3	1083	Mechanical level sensor	2484805
		Slope sensor	2484825
		Ultrasonic sensor	2431211
SUPER 1803-3i	1083	Mechanical level sensor	2484805
		Slope sensor	2484825
		Ultrasonic sensor	2431211
SUPER 1900-2	0719	Mechanical level sensor	2039585
		Slope sensor	2462560026
		Ultrasonic sensor	2197266
SUPER 1900-3	0819	Mechanical level sensor	2484805
		Slope sensor	2484825
		Ultrasonic sensor	2431211
SUPER 1900-3i	0819	Mechanical level sensor	2484805
		Slope sensor	2484825
		Ultrasonic sensor	2431211

SENSORS			
Series code	Serial code	Part	Part no.
SUPER 2000-3	1174	Mechanical level sensor	2484805
		Slope sensor	2484825
		Ultrasonic sensor	2431211
SUPER 2000-3i	1174	Mechanical level sensor	2484805
		Slope sensor	2484825
		Ultrasonic sensor	2431211
SUPER 2003-3	0975	Mechanical level sensor	2484805
		Slope sensor	2484825
		Ultrasonic sensor	2431211
SUPER 2003-3i	0975	Mechanical level sensor	2484805
		Slope sensor	2484825
		Ultrasonic sensor	2431211
SUPER 2100-2	0719	Mechanical level sensor	2039585
		Slope sensor	2462560026
		Ultrasonic sensor	2197266
SUPER 2100-2 IP	0719	Mechanical level sensor	2039585
		Slope sensor	2462560026
		Ultrasonic sensor	2197266
SUPER 2100-3	0819	Mechanical level sensor	2484805
		Slope sensor	2484825
		Ultrasonic sensor	2431211
SUPER 2100-3i	0819	Mechanical level sensor	2484805
		Slope sensor	2484825
		Ultrasonic sensor	2431211
SUPER 3000-2	0874	Mechanical level sensor	2039585
		Slope sensor	2484825
		Ultrasonic sensor	2197266

Original VÖGELE

GRADE AND SLOPE CONTROL SYSTEM

SENSORS			
Series code	Serial code	Part	Part no.
SUPER 3000-3	1074	Mechanical level sensor	2039585
		Slope sensor	2484825
		Ultrasonic sensor	2197266
SUPER 1800-2 SJ	1182	Mechanical level sensor	2039585
		Slope sensor	2462560026
		Ultrasonic sensor	2197266

BIG MULTIPLEX SKI

In its standard configuration, the Big MultiPlex Ski from VÖGELE works with three multi-cell sonic sensors that transfer their measuring results directly to the Niveltronic Plus automatic levelling system. The system then uses these data to calculate a virtual reference level. The advantage of this is that the measuring results cover an overall length of up to 13 meters.

BIG MULTIPLEX SKI				
Series code	Serial code	Part	Type	Part no.
SUPER 1600-1	0782	Big MultiPlex Ski	without transport box	2069778
			with wooden transport box	2285078
	0982	Big MultiPlex Ski	with wooden transport box	2285078
			without transport box	2069778
SUPER 1600-2	1182	Big MultiPlex Ski	without transport box	2069778
			with wooden transport box	2285078
SUPER 1600-3	1582	Big MultiPlex Ski	with metal transport box	2628381
SUPER 1600-3i	1582	Big MultiPlex Ski	with metal transport box	2628381
SUPER 1603-1	0783	Big MultiPlex Ski	without transport box	2069778
			with wooden transport box	2285078
SUPER 1603-2	0883	Big MultiPlex Ski	without transport box	2069778
			with wooden transport box	2285078

BIG MULTIPLEX SKI				
Series code	Serial code	Part	Type	Part no.
SUPER 1603-3i	1183	Big MultiPlex Ski	with metal transport box	2628381
SUPER 1603-3	1183	Big MultiPlex Ski	with metal transport box	2628381
SUPER 1700-3	1982	Big MultiPlex Ski	with metal transport box	2628381
SUPER 1700-3i	1982	Big MultiPlex Ski	with metal transport box	2628381
SUPER 1703-3	1283	Big MultiPlex Ski	with metal transport box	2628381
SUPER 1703-3i	1283	Big MultiPlex Ski	with metal transport box	2628381
SUPER 1800-1	0782, 0982	Big MultiPlex Ski	with wooden transport box	2285078
			without transport box	2069778
SUPER 1800-2	1182	Big MultiPlex Ski	without transport box	2069778
			with wooden transport box	2285078
SUPER 1800-3	1482	Big MultiPlex Ski	with metal transport box	2628381
SUPER 1800-3i	1482	Big MultiPlex Ski	with metal transport box	2628381
SUPER 1803-1	0783	Big MultiPlex Ski	without transport box	2069778
			with wooden transport box	2285078
SUPER 1803-2	0883	Big MultiPlex Ski	without transport box	2069778
			with wooden transport box	2285078
SUPER 1803-3	1083	Big MultiPlex Ski	with metal transport box	2628381
SUPER 1803-3i	1083	Big MultiPlex Ski	with metal transport box	2628381
SUPER 1900-2	0719	Big MultiPlex Ski	without transport box	2069778
			with wooden transport box	2285078
SUPER 1900-3	0819	Big MultiPlex Ski	with metal transport box	2628381
SUPER 1900-3i	0819	Big MultiPlex Ski	with metal transport box	2628381
SUPER 2000-3	1174	Big MultiPlex Ski	with metal transport box	2628381
SUPER 2000-3i	1174	Big MultiPlex Ski	with metal transport box	2628381
SUPER 2003-3	0975	Big MultiPlex Ski	with metal transport box	2628381
SUPER 2003-3i	0975	Big MultiPlex Ski	with metal transport box	2628381
SUPER 2100-2	0719	Big MultiPlex Ski	without transport box	2069778

BIG MULTIPLEX SKI				
Series code	Serial code	Part	Type	Part no.
SUPER 2100-2	0719	Big MultiPlex Ski	with wooden transport box	2285078
SUPER 2100-2 IP	0719	Big MultiPlex Ski	without transport box	2069778
			with wooden transport box	2285078
SUPER 2100-3	0819	Big MultiPlex Ski	with metal transport box	2628381
SUPER 2100-3i	0819	Big MultiPlex Ski	with metal transport box	2628381
SUPER 3000-2	0874	Big MultiPlex Ski	without transport box	2069778
			with wooden transport box	2285078
SUPER 3000-3	1074	Big MultiPlex Ski	with metal transport box	2628381
SUPER 1800-2 SJ	1182	Big MultiPlex Ski	with wooden transport box	2285078
			without transport box	2069778

LEVELING ACCESSORIES

The variable mechanical height sensor from VÖGELE can utilized in a variety of combinations. It can be equipped with skis with lengths of 30 cm, 1 m, or 2 m for referencing from ground, or a bow can be fitted for referencing with a tensioned wire.

LEVELING ACCESSORIES					
Series code	Serial code	Part	Size	Position	Part no.
SUPER 700	0790	Connecting cable	2.5 m	Sensor	2460770015
		Bow			2452140009
		Ski	1 m		2452260015
			2 m		2452260017
			0.35 m		2452260014
SUPER 700-3	0890	Connecting cable	1 m	Sensor	2321132
				Control Panel	2385030
		Bow			2355095

LEVELING ACCESSORIES

Series code	Serial code	Part	Size	Position	Part no.
SUPER 700-3	0890	Ski	1 m		2355133
			0.35 m		2373027
			2 m		2374570
SUPER 700-3i	0890	Connecting cable	1 m	Sensor	2321132
				Control Panel	2385030
		Bow			2355095
		Ski	2 m		2374570
			0.35 m		2373027
			1 m		2355133
SUPER 800	0790	Connecting cable	2.5 m	Sensor	2460770015
		Bow			2452140009
		Ski	2 m		2452260017
			0.35 m		2452260014
			1 m		2452260015
SUPER 800-3	0890	Connecting cable	1 m	Sensor	2321132
				Control Panel	2385030
		Bow			2355095
		Ski	2 m		2374570
			0.35 m		2373027
			1 m		2355133
SUPER 800-3i	0890	Connecting cable		Control Panel	2385030
			1 m	Sensor	2321132
		Bow			2355095
		Ski	1 m		2355133
			0.35 m		2373027
			2 m		2374570
SUPER 700	0990	Connecting cable		Control Panel	2385030

GRADE AND SLOPE CONTROL SYSTEM

LEVELING ACCESSORIES					
Series code	Serial code	Part	Size	Position	Part no.
SUPER 700	0990	Connecting cable	1 m	Sensor	2321132
		Bow			2355095
		Ski	1 m		2355133
			0.35 m		2373027
			2 m		2374570
SUPER 800	0990	Connecting cable		Control Panel	2385030
			1 m	Sensor	2321132
		Bow			2355095
		Ski	1 m		2355133
			0.35 m		2373027
			2 m		2374570
SUPER 1100-2	0811	Connecting cable	1 m	Sensor	2460770014
				External operating station	2032288
			2.5 m	Sensor	2460770015
		Bow			2042554
		Ski	1 m		2042514
			0.35 m		2042513
			2 m		2042515
SUPER 1100-3	1011, 1411	Connecting cable		External operating station	2032288
			1 m	Sensor	2321132
		Bow			2355095
		Ski	1 m		2355133
			0.35 m		2373027
			2 m		2374570
SUPER 1100-3i	1011, 1411	Connecting cable		External operating station	2032288
			1 m	Sensor	2321132
		Bow			2355095

LEVELING ACCESSORIES					
Series code	Serial code	Part	Size	Position	Part no.
SUPER 1100-3i	1011, 1411	Ski	1 m		2355133
			0.35 m		2373027
			2 m		2374570
SUPER 1103-2	0911	Connecting cable	1 m	Sensor	2460770014
				External operating station	2032288
			2.5 m	Sensor	2460770015
		Bow			2042554
		Ski	2 m		2042515
			1 m		2042514
			0.35 m		2042513
SUPER 1103-3	1111	Connecting cable	1 m	Sensor	2321132
				External operating station	2032288
		Bow			2355095
		Ski	0.35 m		2373027
			2 m		2374570
			1 m		2355133
	1511	Connecting cable	1 m	Sensor	2321132
				External operating station	2032288
		Bow			2355095
		Ski	2 m		2374570
			0.35 m		2373027
			1 m		2355133
SUPER 1103-3i	1111	Connecting cable		External operating station	2032288
			1 m	Sensor	2321132
		Bow			2355095
		Ski	2 m		2374570
			1 m		2355133

GRADE AND SLOPE CONTROL SYSTEM

LEVELING ACCESSORIES					
Series code	Serial code	Part	Size	Position	Part no.
SUPER 1103-3i	1111	Ski	0.35 m		2373027
	1511	Connecting cable	1 m	Sensor	2321132
				External operating station	2032288
		Bow			2355095
		Ski	2 m		2374570
			0.35 m		2373027
			1 m		2355133
SUPER 1300-2	0811	Connecting cable		External operating station	2032288
			1 m	Sensor	2460770014
			2.5 m	Sensor	2460770015
		Bow			2042554
		Ski	2 m		2042515
			0.35 m		2042513
			1 m		2042514
SUPER 1300-3	1011	Connecting cable		External operating station	2032288
			1 m	Sensor	2321132
		Bow			2355095
		Ski	1 m		2355133
			0.35 m		2373027
			2 m		2374570
	1411	Connecting cable	1 m	Sensor	2321132
				External operating station	2032288
		Bow			2355095
		Ski	1 m		2355133
			0.35 m		2373027
			2 m		2374570
SUPER 1300-3i	1011	Connecting cable	1 m	Sensor	2321132

LEVELING ACCESSORIES

Series code	Serial code	Part	Size	Position	Part no.
SUPER 1300-3i	1011	Connecting cable		External operating station	2032288
		Bow			2355095
		Ski	2 m		2374570
			0.35 m		2373027
			1 m		2355133
	1411	Connecting cable	1 m	Sensor	2321132
				External operating station	2032288
		Bow			2355095
		Ski	2 m		2374570
			1 m		2355133
			0.35 m		2373027
SUPER 1303-2	0911	Connecting cable	1 m	Sensor	2460770014
				External operating station	2032288
			2.5 m	Sensor	2460770015
		Bow			2042554
		Ski	1 m		2042514
			0.35 m		2042513
			2 m		2042515
SUPER 1303-3	1111, 1511	Connecting cable		External operating station	2032288
			1 m	Sensor	2321132
		Bow			2355095
		Ski	1 m		2355133
			0.35 m		2373027
			2 m		2374570
SUPER 1303-3i	1111, 1511	Connecting cable		External operating station	2032288
			1 m	Sensor	2321132
		Bow			2355095

GRADE AND SLOPE CONTROL SYSTEM

LEVELING ACCESSORIES					
Series code	Serial code	Part	Size	Position	Part no.
SUPER 1303-3i	1111, 1511	Ski	1 m		2355133
			0.35 m		2373027
			2 m		2374570
SUPER 1600-1	0782	Connecting cable		External operating station	2010671
			2.5 m	Sensor	2460770015
		Bow			2452140009
		Ski	2 m		2452260017
			1 m		2452260015
			0.35 m		2452260014
	0982	Connecting cable	2.5 m	Sensor	2460770015
		Bow			2452140009
		Ski	2 m		2452260017
			0.35 m		2452260014
			1 m		2452260015
SUPER 1600-2	1182	Connecting cable	1 m	Sensor	2460770014
				External operating station	2032288
			2.5 m	Sensor	2460770015
		Bow			2042554
		Ski	1 m		2042514
			0.35 m		2042513
			2 m		2042515
SUPER 1600-3	1582	Connecting cable		External operating station	2032288
			1 m	Sensor	2321132
		Bow			2355095
		Ski	1 m		2355133
			0.35 m		2373027
			2 m		2374570

LEVELING ACCESSORIES					
Series code	Serial code	Part	Size	Position	Part no.
SUPER 1600-3i	1582	Connecting cable		External operating station	2032288
			1 m	Sensor	2321132
		Bow			2355095
		Ski	1 m		2355133
			0.35 m		2373027
			2 m		2374570
SUPER 1603-1	0783	Connecting cable		External operating station	2010671
			2.5 m	Sensor	2460770015
		Bow			2452140009
		Ski	2 m		2452260017
			1 m		2452260015
			0.35 m		2452260014
SUPER 1603-2	0883	Connecting cable	1 m	Sensor	2460770014
				External operating station	2032288
			2.5 m	Sensor	2460770015
		Bow			2042554
		Ski	1 m		2042514
			0.35 m		2042513
			2 m		2042515
SUPER 1603-3i	1183	Connecting cable		External operating station	2032288
			1 m	Sensor	2321132
		Bow			2355095
		Ski	1 m		2355133
			0.35 m		2373027
			2 m		2374570
SUPER 1603-3	1183	Connecting cable		External operating station	2032288
			1 m	Sensor	2321132

GRADE AND SLOPE CONTROL SYSTEM

LEVELING ACCESSORIES					
Series code	Serial code	Part	Size	Position	Part no.
SUPER 1603-3	1183	Bow			2355095
		Ski	1 m		2355133
			0.35 m		2373027
			2 m		2374570
SUPER 1700-3	1982	Connecting cable		Control Panel	2032288
				Control Panel	2510247
			1 m	Sensor	2321132
		Bow			2355095
		Ski	1 m		2355133
			0.35 m		2373027
			2 m		2374570
SUPER 1700-3i	1982	Connecting cable		Control Panel	2510247
				Control Panel	2032288
			1 m	Sensor	2321132
		Bow			2355095
		Ski	1 m		2355133
			0.35 m		2373027
			2 m		2374570
SUPER 1703-3	1283	Connecting cable	1 m	Sensor	2321132
				Control Panel	2510247
				Control Panel	2032288
		Bow			2355095
		Ski	2 m		2374570
			1 m		2355133
			0.35 m		2373027
SUPER 1703-3i	1283	Connecting cable		Control Panel	2510247
				Control Panel	2032288

LEVELING ACCESSORIES

Series code	Serial code	Part	Size	Position	Part no.
SUPER 1703-3i	1283	Connecting cable	1 m	Sensor	2321132
		Bow			2355095
		Ski	1 m		2355133
			0.35 m		2373027
			2 m		2374570
SUPER 1800-1	0782	Connecting cable		External operating station	2010671
			2.5 m	Sensor	2460770015
		Bow			2452140009
		Ski	2 m		2452260017
			1 m		2452260015
			0.35 m		2452260014
	0982	Connecting cable	2.5 m	Sensor	2460770015
		Bow			2452140009
		Ski	2 m		2452260017
			0.35 m		2452260014
			1 m		2452260015
SUPER 1800-2	1182	Connecting cable	1 m	Sensor	2460770014
				External operating station	2032288
			2.5 m	Sensor	2460770015
		Bow			2042554
		Ski	1 m		2042514
			0.35 m		2042513
			2 m		2042515
SUPER 1800-3	1482	Connecting cable		External operating station	2032288
			1 m	Sensor	2321132
		Bow			2355095
		Ski	1 m		2355133

GRADE AND SLOPE CONTROL SYSTEM

LEVELING ACCESSORIES					
Series code	Serial code	Part	Size	Position	Part no.
SUPER 1800-3	1482	Ski	0.35 m		2373027
			2 m		2374570
SUPER 1800-3i	1482	Connecting cable		External operating station	2032288
			1 m	Sensor	2321132
		Bow			2355095
		Ski	1 m		2355133
			0.35 m		2373027
			2 m		2374570
SUPER 1803-1	0783	Connecting cable		External operating station	2010671
			2.5 m	Sensor	2460770015
		Bow			2452140009
		Ski	2 m		2452260017
			1 m		2452260015
			0.35 m		2452260014
SUPER 1803-2	0883	Connecting cable	1 m	Sensor	2460770014
				External operating station	2032288
			2.5 m	Sensor	2460770015
		Bow			2042554
		Ski	1 m		2042514
			0.35 m		2042513
			2 m		2042515
SUPER 1803-3	1083	Connecting cable		External operating station	2032288
			1 m	Sensor	2321132
		Bow			2355095
		Ski	1 m		2355133
			0.35 m		2373027
			2 m		2374570

LEVELING ACCESSORIES					
Series code	Serial code	Part	Size	Position	Part no.
SUPER 1803-3i	1083	Connecting cable		External operating station	2032288
			1 m	Sensor	2321132
		Bow			2355095
		Ski	1 m		2355133
			0.35 m		2373027
			2 m		2374570
SUPER 1900-2	0719	Connecting cable	1 m	Sensor	2460770014
				External operating station	2032288
			2.5 m	Sensor	2460770015
		Bow			2042554
		Ski	1 m		2042514
			0.35 m		2042513
			2 m		2042515
SUPER 1900-3	0819	Connecting cable		External operating station	2032288
			1 m	Sensor	2321132
		Bow			2355095
		Ski	1 m		2355133
			0.35 m		2373027
			2 m		2374570
SUPER 1900-3i	0819	Connecting cable		External operating station	2032288
			1 m	Sensor	2321132
		Bow			2355095
		Ski	2 m		2374570
			1 m		2355133
			0.35 m		2373027
SUPER 2000-3	1174	Connecting cable		Control Panel	2032288
			1 m	Sensor	2321132

GRADE AND SLOPE CONTROL SYSTEM

LEVELING ACCESSORIES					
Series code	Serial code	Part	Size	Position	Part no.
SUPER 2000-3	1174	Connecting cable		Control Panel	2510247
		Bow			2355095
		Ski	2 m		2374570
			1 m		2355133
			0.35 m		2373027
SUPER 2000-3i	1174	Connecting cable		Control Panel	2032288
			1 m	Sensor	2321132
				Control Panel	2510247
		Bow			2355095
		Ski	2 m		2374570
			1 m		2355133
			0.35 m		2373027
SUPER 2003-3	0975	Connecting cable	1 m	Sensor	2321132
				Control Panel	2510247
				Control Panel	2032288
		Bow			2355095
		Ski	2 m		2374570
			0.35 m		2373027
			1 m		2355133
SUPER 2003-3i	0975	Connecting cable	1 m	Sensor	2321132
				Control Panel	2510247
				Control Panel	2032288
		Bow			2355095
		Ski	2 m		2374570
			0.35 m		2373027
			1 m		2355133
SUPER 2100-2	0719	Connecting cable	1 m	Sensor	2460770014

LEVELING ACCESSORIES					
Series code	Serial code	Part	Size	Position	Part no.
SUPER 2100-2	0719	Connecting cable		External operating station	2032288
			2.5 m	Sensor	2460770015
		Bow			2042554
		Ski	1 m		2042514
			0.35 m		2042513
			2 m		2042515
SUPER 2100-2 IP	0719	Connecting cable	2.5 m	Sensor	2460770015
			1 m	Sensor	2460770014
				External operating station	2032288
		Bow			2042554
		Ski	1 m		2042514
			0.35 m		2042513
			2 m		2042515
SUPER 2100-3	0819	Connecting cable	1 m	Sensor	2321132
				External operating station	2032288
		Bow			2355095
		Ski	2 m		2374570
			0.35 m		2373027
			1 m		2355133
SUPER 2100-3i	0819	Connecting cable		External operating station	2032288
			1 m	Sensor	2321132
		Bow			2355095
		Ski	1 m		2355133
			0.35 m		2373027
			2 m		2374570
SUPER 3000-2	0874	Connecting cable	2.5 m	Sensor	2460770015
			1 m	Sensor	2460770014

GRADE AND SLOPE CONTROL SYSTEM

LEVELING ACCESSORIES					
Series code	Serial code	Part	Size	Position	Part no.
SUPER 3000-2	0874	Connecting cable		External operating station	2032288
		Bow			2042554
		Ski	1 m		2042514
			0.35 m		2042513
			2 m		2042515
SUPER 3000-3	1074	Connecting cable	1 m	Sensor	2321132
				External operating station	2032288
		Bow			2355095
		Ski	1 m		2355133
			2 m		2374570
			0.35 m		2373027
SUPER 1800-2 SJ	1182	Connecting cable	1 m	Sensor	2460770014
				External operating station	2032288
			2.5 m	Sensor	2460770015
		Bow			2042554
		Ski	1 m		2042514
			0.35 m		2042513
			2 m		2042515
SUPER 1800-3 SJ	1482	Connecting cable		External operating station	2032288
SUPER 1800-3i SJ	1482	Connecting cable		External operating station	2032288

STRINGLINE TENSIONING SYSTEM

The practical stringline tensioning system from VÖGELE allows you to quickly and easily set up your stringline for accurate grade and slope control.

STRINGLINE TENSIONING SYSTEM					
Part	Version	Description	Package includes	Package content	Part no.
Stringline rod		Stringline rod elements for 50 – 250 mm distance from stakes. Recommended every 5 metres.			2060728
Stake		Iron stakes for stringlines. Recommended every 5 metres.			2060896
Polyester stringline		Polyester stringline on 500 metre spool, diameter: 3 mm, colour: red.			2060897
Stringline drum		Mobile drum to store and easily unwind the polyester stringline.			2060899
Stringline tensioning system	Base set for 500 metres			Stakes, polyester stringline, rods, mobile stringline drum, tension spring balance, pulley block with accessories in the appropriate quantity	2541050
	500-metre extension set			Stakes, polyester stringline, rods, tension spring balance in the appropriate quantity	2541051
Tension spring balance		To adjust the tension in the polyester stringline. Recommended every 100 metres.			4606032026
Pulley block		Pulley for tensioning the polyester stringline.	with accessories		4606352002
Tension spring balance kit				Tension spring balance, pulley block with accessories in corresponding quantity	4624250008

Original VÖGELE

MAINTENANCE PARTS

Filling or lubricating your machine with a lubricant specially tailored to the requirements has a significant impact on the service life of the active parts in combustion engines, hydraulic components, gearboxes and bearings. WIRTGEN GROUP lubricants are optimised for your machine and therefore meet these special requirements perfectly. Combined with WIRTGEN GROUP filter and maintenance packages, our lubricants are the best choice to maintain the performance of your machine and permanently reduce maintenance costs.

> Read more online

FILTER PACKAGES

WIRTGEN GROUP filter systems, which are designed to be perfectly compatible with our lubricants and operating agents, ensure that the systems remain clean and prevent damage to components, thus maximising the service life of your machines. The filter packages contain the filters required based on the machine type's respective replacement interval. In order to ensure that the machine performs at its best, we recommend that you adhere to the specified replacement intervals.

FILTER PACKAGES

Series code	Serial code	Series range	Application	Exhaust emission standard	First service	Replacement interval	Part no.
SUPER 700	0790	10 - 9999				500 h	2033689
					50 h		2283867
						1000 h	2033691

Due to possible technical changes, always refer to the information in the instruction manual.

FILTER PACKAGES

Series code	Serial code	Series range	Application	Exhaust emission standard	First service	Replacement interval	Part no.
SUPER 700-3	0890	10 - 9999			50 h		2373954
						1000 h	2373956
						500 h	2373955
SUPER 700-3i	0890	10 - 9999			50 h		2373954
						1000 h	2373956
						500 h	2373955
SUPER 800	0790	10 - 9999				500 h	2033689
					50 h		2283867
						1000 h	2033691
SUPER 800-3	0890	10 - 9999			50 h		2373954
						1000 h	2373956
						500 h	2373955
SUPER 800-3i	0890	10 - 9999			50 h		2373954
						1000 h	2373956
						500 h	2373955
SUPER 700	0990	10 - 9999				1000 h	2373956
						500 h	2373955
					50 h		2373954
SUPER 800	0990	10 - 9999				1000 h	2373956
					50 h		2373954
						500 h	2373955
SUPER 1100-2	0811	10 - 9999				500 h	2069167
					50 h		2283867
						1000 h	2069169
SUPER 1100-3	1411	10 - 9999		EU Stage 4/ US EPA Tier 4f	50 h		2283867
				EU Stage 4/ US EPA Tier 4f		1000 h	2566581

Due to possible technical changes, always refer to the information in the instruction manual.

FILTER PACKAGES

Series code	Serial code	Series range	Application	Exhaust emission standard	First service	Replacement interval	Part no.
SUPER 1100-3	1411	10 - 9999		EU Stage 4/ US EPA Tier 4f		500 h	2566577
SUPER 1100-3i	1011	10 - 9999				500 h	2248324
					50 h		2283867
						1000 h	2248325
	1411	10 - 9999		EU Stage 4/ US EPA Tier 4f	50 h		2283867
				EU Stage 4/ US EPA Tier 4f		1000 h	2566581
				EU Stage 4/ US EPA Tier 4f		500 h	2566577
SUPER 1103-2	0911	10 - 9999				500 h	2069167
					50 h		2283867
						1000 h	2069169
SUPER 1103-3	1511	10 - 9999			50 h		2283867
						1000 h	2566581
						500 h	2566577
SUPER 1103-3i	1111	10 - 9999				500 h	2248324
					50 h		2283867
						1000 h	2248325
	1511	10 - 9999		EU Stage 4/ US EPA Tier 4f	50 h		2283867
				EU Stage 4/ US EPA Tier 4f		1000 h	2566581
				EU Stage 4/ US EPA Tier 4f		500 h	2566577
SUPER 1300-2	0811	10 - 9999				500 h	2069167
					50 h		2283867
						1000 h	2069169
SUPER 1300-3	1411	10 - 9999		EU Stage 4/ US EPA Tier 4f	50 h		2283867
				EU Stage 4/ US EPA Tier 4f		1000 h	2566581
				EU Stage 4/ US EPA Tier 4f		500 h	2566577
SUPER 1300-3i	1011	10 - 9999				500 h	2248324

Due to possible technical changes, always refer to the information in the instruction manual.

FILTER PACKAGES

Series code	Serial code	Series range	Application	Exhaust emission standard	First service	Replacement interval	Part no.
SUPER 1300-3i	1011	10 - 9999			50 h		2283867
						1000 h	2248325
	1411	10 - 9999		EU Stage 4/ US EPA Tier 4f	50 h		2283867
				EU Stage 4/ US EPA Tier 4f		1000 h	2566581
				EU Stage 4/ US EPA Tier 4f		500 h	2566577
SUPER 1303-2	0911	10 - 9999				500 h	2069167
					50 h		2283867
						1000 h	2069169
SUPER 1303-3	1511	10 - 9999			50 h		2283867
						1000 h	2566581
						500 h	2566577
SUPER 1303-3i	1111	10 - 9999				500 h	2248324
					50 h		2283867
						1000 h	2248325
	1511	10 - 9999		EU Stage 4/ US EPA Tier 4f	50 h		2283867
				EU Stage 4/ US EPA Tier 4f		1000 h	2566581
				EU Stage 4/ US EPA Tier 4f		500 h	2566577
SUPER 1600-1	0782	10 - 333				500 h	2011361
						1000 h	2011362
		334 - 9999				500 h	2037317
						1000 h	2037318
SUPER 1600-2	1182	10 - 9999			50 h		2052665
						1000 h	2052667
						500 h	2052666
SUPER 1600-3	1582	10 - 9999			50 h		2318759
						1000 h	2343135

Due to possible technical changes, always refer to the information in the instruction manual.

FILTER PACKAGES

Series code	Serial code	Series range	Application	Exhaust emission standard	First service	Replacement interval	Part no.
SUPER 1600-3	1582	10 - 9999				500 h	2343133
SUPER 1600-3i	1582	10 - 333			50 h		2318759
		10 - 9999				500 h	2343128
						1000 h	2343129
		334 - 9999			50 h		2318759
				US EPA Tier 4f		500 h	2484564
				US EPA Tier 4f		1000 h	2539013
SUPER 1603-1	0783	10 - 241				500 h	2011361
						1000 h	2011362
		242 - 9999				500 h	2037317
						1000 h	2037318
SUPER 1603-2	0883	10 - 9999			50 h		2052665
						1000 h	2052667
						500 h	2052666
SUPER 1603-3i	1183	10 - 333			50 h		2318759
		10 - 9999				500 h	2343128
						1000 h	2343129
		202 - 9999				500 h	2484564
						1000 h	2539013
		334 - 9999			50 h		2318759
SUPER 1603-3	1183	10 - 9999			50 h		2318759
						1000 h	2343135
						500 h	2343133
SUPER 1700-3	1982	10 - 9999			50 h		2318759
						1000 h	2343135
						500 h	2343133

Due to possible technical changes, always refer to the information in the instruction manual.

FILTER PACKAGES

Series code	Serial code	Series range	Application	Exhaust emission standard	First service	Replacement interval	Part no.
SUPER 1700-3i	1982	10 - 9999		EU Stage 4/ US EPA Tier 4f	50 h		2318759
				EU Stage 4/ US EPA Tier 4f		1000 h	2539013
				EU Stage 4/ US EPA Tier 4f		500 h	2484564
SUPER 1703-3	1283	10 - 9999			50 h		2318759
						500 h	2343133
				EU Stage 4/ US EPA Tier 4f		1000 h	2539013
				EU Stage 4/ US EPA Tier 4f		500 h	2484564
						1000 h	2343135
SUPER 1703-3i	1283	10 - 9999			50 h		2318759
						500 h	2343133
				EU Stage 4/ US EPA Tier 4f		1000 h	2539013
				EU Stage 4/ US EPA Tier 4f		500 h	2484564
						1000 h	2343135
SUPER 1800-1	0782, 0982	10 - 9999				1000 h	2012540
						500 h	2012539
SUPER 1800-2	1182	10 - 9999			50 h		2052665
						1000 h	2052669
						500 h	2052668
SUPER 1800-3	1482	10 - 150				500 h	2241430
					50 h		2318759
						1000 h	2318761
		151 - 9999				500 h	2304176
						1000 h	2304180
					50 h		2318759
SUPER 1800-3i	1482	10 - 1428			50 h		2318759
		10 - 9999				500 h	2320238

Due to possible technical changes, always refer to the information in the instruction manual.

FILTER PACKAGES

Series code	Serial code	Series range	Application	Exhaust emission standard	First service	Replacement interval	Part no.
SUPER 1800-3i	1482	10 - 9999				1000 h	2320241
		1429 - 9999			50 h		2318759
				US EPA Tier 4f		1000 h	2539564
				US EPA Tier 4f		500 h	2442195
		3077 - 9999		EU Stage 5		500 h	2727445
				EU Stage 5		1000 h	2796440
SUPER 1803-1	0783	10 - 9999				1000 h	2012540
						500 h	2012539
SUPER 1803-2	0883	10 - 9999			50 h		2052665
						1000 h	2052669
						500 h	2052668
SUPER 1803-3	1083	10 - 54			50 h		2318759
						500 h	2241430
						1000 h	2318761
		55 - 9999				1000 h	2304180
						500 h	2304176
					50 h		2318759
SUPER 1803-3i	1083	10 - 569			50 h		2318759
		10 - 9999				500 h	2320238
						1000 h	2320241
		569 - 9999		US EPA Tier 4f		1000 h	2539564
				US EPA Tier 4f		500 h	2442195
		570 - 9999			50 h		2318759
		1156 - 9999		EU Stage 5		1000 h	2796440
				EU Stage 5		500 h	2727445
SUPER 1900-2	0719	10 - 1304			50 h		2041586

Due to possible technical changes, always refer to the information in the instruction manual.

FILTER PACKAGES

Series code	Serial code	Series range	Application	Exhaust emission standard	First service	Replacement interval	Part no.
SUPER 1900-2	0719	10 - 1304				500 h	2041587
						1000 h	2041588
		1305 - 9999			50 h		2041586
						500 h	2188956
						1000 h	2188959
SUPER 1900-3	0819	10 - 342				500 h	2241430
						1000 h	2318761
		10 - 979			50 h		2041586
		343 - 9999				500 h	2304176
						1000 h	2304180
		980 - 9999			50 h		2318759
SUPER 1900-3i	0819	10 - 50				500 h	2241427
						1000 h	2241431
					50 h		2318759
		51 - 688			50 h		2318759
		51 - 1000				1000 h	2320241
		51 - 9999				500 h	2320238
		689 - 951			50 h		2318759
						1000 h	2442196
				US EPA Tier 4f		500 h	2442195
		952 - 9999			50 h		2318759
				US EPA Tier 4f		500 h	2442195
						1000 h	2505589
		1884 - 9999		EU Stage 5		1000 h	2505589
				EU Stage 5		500 h	2727445
SUPER 2000-3	1174	10 - 81			50 h		2041586

Due to possible technical changes, always refer to the information in the instruction manual.

FILTER PACKAGES							
Series code	Serial code	Series range	Application	Exhaust emission standard	First service	Replacement interval	Part no.
SUPER 2000-3	1174	10 - 9999				500 h	2304176
						1000 h	2304180
		82 - 9999			50 h		2318759
SUPER 2000-3i	1174	10 - 70			50 h		2318759
						500 h	2442195
				US EPA Tier 4f		1000 h	2442196
		71 - 9999		US EPA Tier 4f	50 h		2318759
						500 h	2442195
						1000 h	2505589
SUPER 2003-3	0975	10 - 43			50 h		2041586
		10 - 9999				500 h	2304176
						1000 h	2304180
		44 - 9999			50 h		2318759
SUPER 2003-3i	0975	10 - 36			50 h		2318759
				US EPA Tier 4f		500 h	2442195
				US EPA Tier 4f		1000 h	2442196
		37 - 9999			50 h		2318759
				US EPA Tier 4f		500 h	2442195
				US EPA Tier 4f		1000 h	2505589
SUPER 2100-2	0719	10 - 1304			50 h		2041586
						500 h	2041587
						1000 h	2041588
		1305 - 9999			50 h		2041586
						500 h	2188956
						1000 h	2188959
SUPER 2100-2 IP	0719	10 - 1304				500 h	2041587

Due to possible technical changes, always refer to the information in the instruction manual.

FILTER PACKAGES

Series code	Serial code	Series range	Application	Exhaust emission standard	First service	Replacement interval	Part no.
SUPER 2100-2 IP	0719	10 - 1304			50 h		2041586
						1000 h	2041588
		1305 - 9999			50 h		2041586
						500 h	2188956
						1000 h	2188959
SUPER 2100-3	0819	10 - 342				1000 h	2318761
						500 h	2241430
		10 - 979			50 h		2041586
		343 - 9999				500 h	2304176
						1000 h	2304180
		980 - 9999			50 h		2318759
SUPER 2100-3i	0819	10 - 182			50 h		2318759
						1000 h	2296144
						500 h	2296142
		183 - 688			50 h		2318759
						500 h	2320239
		183 - 9999				1000 h	2320242
		689 - 951			50 h		2318759
				US EPA Tier 4f(+)		500 h	2442195
				US EPA Tier 4f		1000 h	2442196
		952 - 9999			50 h		2318759
				US EPA Tier 4f(+)		500 h	2442195
				US EPA Tier 4f(+)		1000 h	2505589
				US EPA Tier 4f(+)		1000 h	2727446
		1884 - 9999		EU Stage 5		500 h	2727445
SUPER 3000-2	0874	10 - 14				500 h	2136259

Due to possible technical changes, always refer to the information in the instruction manual.

FILTER PACKAGES

Series code	Serial code	Series range	Application	Exhaust emission standard	First service	Replacement interval	Part no.
SUPER 3000-2	0874	10 - 14			50 h		2136257
						1000 h	2136261
		15 - 9999				1000 h	2287481
						500 h	2287476
					50 h		2136257
SUPER 3000-3	1074	10 - 21		EU Stage 5		1000 h	2728027
				Tier 2; EU Stage 5		500 h	2728024
				Tier 2		1000 h	2728025
		10 - 9999		Tier 2; EU Stage 5	50 h		2318759
		21 - 9999		EU Stage 5		1000 h	2906975
				Tier 2		1000 h	2906973
				Tier 2; EU Stage 5		500 h	2906972
SUPER 1800-2 SJ	1182	10 - 9999				500 h	2052668
					50 h		2052665
						1000 h	2052669
SUPER 1800-3i SJ	1482	10 - 1428			50 h		2318759
		10 - 9999				1000 h	2320241
				EU Stage 5		1000 h	2796440
						500 h	2320238
			Spray module			1000 h	2601324
			Spray module			500 h	2601321
		1429 - 9999				1000 h	2539564
				US EPA Tier 4f		500 h	2442195
					50 h		2318759
		3077 - 9999		EU Stage 5		500 h	2727445
MT 3000-2	0761	10 - 9999				1000 h	2184909

Due to possible technical changes, always refer to the information in the instruction manual.

FILTER PACKAGES

Series code	Serial code	Series range	Application	Exhaust emission standard	First service	Replacement interval	Part no.
MT 3000-2	0761	10 - 9999			50 h		2184906
						500 h	2184908
MT 3000-2i	0761	187 - 9999				500 h	2487993
						1000 h	2487995
					50 h		2184906
MT 3000-3	0861	10 - 9999		Tier 3	50 h		2647314
				Tier 3		1000 h	2647318
				Tier 3		500 h	2647316
MT 3000-3i	0861	10 - 9999		EU Stage 5	50 h		2647314
				EU Stage 5		500 h	2647316
				EU Stage 5		1000 h	2647318
MT 3000-3 Offset	0861	10 - 9999		Tier 3	50 h		2647314
				Tier 3		1000 h	2647318
				Tier 3		500 h	2647316
MT 3000-3i Offset	0861	10 - 9999		EU Stage 5	50 h		2647314
				EU Stage 5		500 h	2647317
				EU Stage 5		1000 h	2647320

Original VÖGELE

MAINTENANCE PARTS

LUBRICANTS

Filling or lubricating your machine with a lubricant which is specifically matched to your application is critical for the service life of the operational parts in combustion engines, hydraulic components, gear units and bearings.

WIRTGEN GROUP lubricants meet these requirements perfectly and are optimised for your WIRTGEN GROUP machine.

The best choice for ensuring the effectiveness of your machine and reducing maintenance costs long-term!

> Read more online for WIRTGEN

> Read more online for VÖGELE

> Read more online for HAMM

> Read more online for KLEEMANN

GEAR OILS

Part	Properties	Container	Part no.
Gear oil 85W-90	Mineral oil-based axle gear oil for WIRTGEN drive systems. Do not use for WIRTGEN milling drum gearboxes (except 2500 SM, 4200 SM), HAMM vibratory bearings and drum drives or VÖGELE pump splitter gearboxes and drive systems.	5 l	2065030
		20 l	2065031
		208 l	2065032
High-performance gear oil PGLP 150	Exclusive fully synthetic gear oil tailored to high-performance use in WIRTGEN milling drum gearboxes. The high wettability of the lubricant ensures that the oil adheres well to gears and thus offers excellent wear protection. Do not use for HAMM vibratory bearings and drum drives.	5 l	2173019
		20 l	199752
		208 l	2120829
High-performance gear oil PGLP 220	Exclusive fully synthetic gear oil designed for high-performance use in WIRTGEN milling drum gearboxes as well as KLEEMANN conveyor and bevel gearboxes. The high wettability of the lubricant ensures that the oil adheres well to gears and thus offers excellent wear protection. Do not use for HAMM vibratory bearings and drum drives.	5 l	2170074
		20 l	2065033
		208 l	2065034
High-performance gear oil PGLP 460	Exclusive fully synthetic gear oil tailored to high-performance use in WIRTGEN hot recyclers and in S-Pack binding agent metering units. The high wettability of the lubricant ensures that the oil adheres well to gears and thus offers excellent wear protection. Do not use for HAMM vibratory bearings and drum drives.	5 l	2461524
		20 l	2120830
Multi gear oil VG 150	Mineral oil-based industrial gear oil for KLEEMANN cone crushers. The EP (extreme pressure) additives provide exceptional wear protection. Recommended for use in KLEEMANN MCO 9 EVO and MCO 11 PRO cone crushers.	20 l	2483280
		208 l	2483281

Due to possible technical changes, always refer to the information in the instruction manual.

GEAR OILS

Part	Properties	Container	Part no.
Special gear oil	Special fully synthetic multigrade gear oil for VÖGELE pump splitter gearboxes and drive systems, HAMM vibratory bearings as well as KLEEMANN travel drives. It has excellent cold-start behaviour and offers exceptional wear protection (for example in bearings, gear wheels) and is therefore particularly suitable for demanding applications.	5 l	1238051
		20 l	2065037
		208 l	2065038
Special gear oil for roller drum drives	Special fully synthetic multigrade gear oil for HAMM roller drum drives. It has excellent cold-start behaviour and offers exceptional wear protection (for example in bearings, gear wheels) and is therefore particularly suitable for demanding applications.	5 l	2571293
		20 l	2571294
		208 l	2571300

HYDRAULIC OILS

Part	Properties	Container	Part no.
Clutch fuid HLP 32	Hydraulic oil for use in KLEEMANN clutches Suitable for low temperatures (subpolar zone).	5 l	2268030
		20 l	2268032
Hydraulic Oil HVLP 46	Multigrade hydraulic oil Suitable for moderate temperatures.	20 l	2065028
		208 l	2065029
		1000 l IBC	2118571
Hydraulic oil HVLP 68	Multigrade hydraulic oil suitable for high temperatures (subtropics, tropics).	20 l	2118574
		208 l	2570591

COOLANTS

Part	Properties	Container	Part no.
Antifreezing Compound WG30	Coolants for protection against corrosion, overheating and frost (not suitable for use in 09WR (WR 200i) or KLEEMANN machines).	5 l	2173022
		20 l	2173023
		208 l	2173024
Antifreezing Compound WG48	Coolant for KLEEMANN machines to protect against corrosion, overheating and frost.	20 l	2535933
WG40 Anti-Freeze (pink)	Coolants to protect against corrosion, overheating and frost for Mercedes Benz diesel engines installed in 09WR (WR 200i).	20 l	2555507

MAINTENANCE PARTS

ENGINE OILS

Part	Properties	Container	Part no.
Engine oil low SAPS 10W-30	Semi-synthetic 'Low SAPS' engine oil (low sulphated ash, sulphur and phosphorus content) with Fuel Economy technology. Its low sulphated ash content ensures that burnt oil components do not prematurely clog the exhaust aftertreatment system's particulate filters (DPF).	5 l	2210320
		20 l	2210322
		208 l	2210323
		1000 l IBC	2118570
Engine oil low SAPS 10W-40	Synthetic low-viscosity engine oil with a comprehensive performance spectrum Fuel savings of up to 1% compared to a 15W-40 are possible. For use in markets in which low-sulphur fuel is used (e.g. Europe). Suitable for engines with exhaust gas aftertreatment (EU Stage 3b/ US EPA Tier 4i exhaust emission standard and above).	5 l	2346869
		20 l	2346870
		208 l	2346871
Engine oil low SAPS 15W-40	Mineral oil-based engine oil with higher quality base oil Meets the viscosity requirements of all WIRTGEN GROUP machines with Cummins engines. For use in markets in which low-sulphur fuel is used (e.g. Europe). Suitable for engines with exhaust gas aftertreatment (EU Stage 3b/ US EPA Tier 4i exhaust emission standard and above).	5 l	2573349
		20 l	2573350
		208 l	2573351
		1000 l IBC	2637453
Engine oil 10W-40	Synthetic low-viscosity engine oil for the longest oil change intervals For use in markets in which fuel with a higher sulphur content is used (e.g. India, China, Africa, South America). Suitable for engines without exhaust aftertreatment (up to and including EU Stage 3a/US EPA Tier 3 exhaust emission standards).	5 l	2112355
		20 l	2112354
		208 l	2219171
		1000 l IBC	2118569
Engine oil 15W-40	Mineral oil-based multigrade engine oil For use in markets where fuel with a higher sulphur content is used (for example India, China, Africa, South America). Suitable for engines without exhaust aftertreatment (up to and including EU Stage 3a/US EPA Tier 3 exhaust emission standards).	5 l	2065020
		20 l	2065025
		208 l	2065026
		1000 l IBC	2118572

GREASE

Part	Properties	Container	Part no.
Drive bearing grease	Special high-performance grease for use in HAMM bearings. Extremely pressure- and water-resistant.	1 kg	1227114

Due to possible technical changes, always refer to the information in the instruction manual.

GREASE

Part	Properties	Container	Part no.
Drum bearing grease	Exclusive grease for the lubrication of HAMM drum bearings. Extremely temperature- and pressure-resistant.	1 kg	1205757
Friction and roller bearing grease	High-performance polyurea grease with extreme pressure resistance and excellent wear protection. For the lubrication of VÖGELE roller bearings and sliding bearings that are subject to high thermal loads as well as BENNINGHOVEN applications. Wide operating temperature range from -25 °C to +180 °C (multigrade grease).	18 kg	2027868
		400 g	WX3178176
High-performance grease	Mineral oil-based lithium complex grease with excellent wear protection. For use on couplings and WIRTGEN remixers, for example. Wide operating temperature range from -20 °C to +150 °C (multigrade grease).	400 g	47259
KLEEMANN high-performance grease	Grease for KLEEMANN screen bearings.	380 g	M10021195
Multipurpose Moly grease	Mineral oil-based grease for lubricating high-load or shock-loaded bearings in damp, unfavourable conditions. Suitable for lubrication points with mixed friction, rough surfaces and as assembly grease (for example joint pins, wheel bearings). Not suitable for ball bearings and polished surfaces. Operating temperature from -25 °C to +120 °C.	18 kg	WX3327565
		180 kg	WX3327566
		400 g	2065035
Cone Moly grease	High viscosity lithium complex grease for lubricating KLEEMANN cone crushers. Molybdenum disulphide (MoS2) grease. For heavy-duty, slow-turning bearings and bolts. Not suitable for ball bearings and polished surfaces. Operating temperature from -20 °C to +150 °C.	18 kg	2368338
		400 g	2342967

OTHER LUBRICANTS

Part	Properties	Container	Part no.
AdBlue®/DEF	32.5% high-purity urea solution according to DIN 70070 / ISO 22241. AdBlue® is a registered trademark of the Association of the Automotive Industry (Verband der Automobilindustrie e. V.; VDA)	10 l	2434706
		210 l	2090870
		1000 l	2447156
Asphalt anti-stick	The perfect solution for pneumatic tyre and combination rollers from HAMM – prevents bitumen sticking to the rubber tyres. The emulsion is based on a non-toxic solution and is therefore quickly biodegradable.	5 l	2559307
		20 l	2559309
Silicone transformer liquid	DOW transformer oil can be used for the magnetic separator on KLEEMANN machines.	20 l	2346389

BIOLOGICAL HYDRAULIC OIL			
Part	Properties	Container	Part no.
Bio Hydraulic Oil HVLP 46	Biodegradable multigrade hydraulic oil Suitable for moderate temperatures.	20 l	2118575
		208 l	2270558

LIGHTING

VÖGELE road pavers meet the highest European and international safety standards. In order to permanently maintain this prescribed level of safety, the individual safety devices must be complete and fully functional even during intensive operation. To better illuminate construction sites at night,

VÖGELE offer light balloons as supplementary lighting. These create optimised visibility and working conditions and also help to prevent accidents.

> Read more online

LIGHT BALLOONS

VÖGELE light balloons ensure that workers enjoy maximum visibility on construction sites – even at night.

LIGHT BALLOONS							
Series code	Serial code	Type	Mount	Power	Pack-age con-tent	Please note	Part no.
SUPER 1100-3	1011, 1411	LED	with roof mount	600 W	1 pc.		2336013
SUPER 1100-3i	1011, 1411	LED	with roof mount	600 W	1 pc.		2336013
SUPER 1103-3	1111, 1511	LED	with roof mount	600 W	1 pc.		2336013

LIGHT BALLOONS							
Series code	Serial code	Type	Mount	Power	Package content	Please note	Part no.
SUPER 1103-3i	1111, 1511	LED	with roof mount	600 W	1 pc.		2336013
SUPER 1300-3	1011, 1411	LED	with roof mount	600 W	1 pc.		2336013
SUPER 1300-3i	1011, 1411	LED	with roof mount	600 W	1 pc.		2336013
SUPER 1303-3	1111, 1511	LED	with roof mount	600 W	1 pc.		2336013
SUPER 1303-3i	1111, 1511	LED	with roof mount	600 W	1 pc.		2336013
SUPER 1600-2	1182		with mount	2 kW	1 pc.		2090337
			with roof mount	2 kW	2 pc.		2090341
			with roof mount	2 kW	1 pc.		2090340
			with mount	2 kW	2 pc.		2090339
SUPER 1600-3	1582	LED			1 pc.		2241443
		LED	with roof mount	600 W	1 pc.	Please ensure that the machine is equipped with a power socket.	2484916
			with roof mount	2 kW	1 pc.	Please ensure that the machine is equipped with a power socket.	2196074
			with roof mount	2 kW	2 pc.	Please ensure that the machine is equipped with a power socket.	2196075
SUPER 1600-3i	1582	LED			1 pc.		2241443
		LED	with roof mount	600 W	1 pc.	Please ensure that the machine is equipped with a power socket.	2484916
			with roof mount	2 kW	1 pc.	Please ensure that the machine is equipped with a power socket.	2196074
			with roof mount	2 kW	2 pc.	Please ensure that the machine is equipped with a power socket.	2196075
SUPER 1603-2	0883		with mount	2 kW	1 pc.		2090337
			with roof mount	2 kW	2 pc.		2090341
			with roof mount	2 kW	1 pc.		2090340

LIGHT BALLOONS

Series code	Serial code	Type	Mount	Power	Package content	Please note	Part no.
SUPER 1603-2	0883		with mount	2 kW	2 pc.		2090339
SUPER 1603-3i	1183	LED			1 pc.		2241443
		LED	with roof mount	600 W	1 pc.	Please ensure that the machine is equipped with a power socket.	2484916
			with roof mount	2 kW	1 pc.	Please ensure that the machine is equipped with a power socket.	2196074
			with roof mount	2 kW	2 pc.	Please ensure that the machine is equipped with a power socket.	2196075
SUPER 1603-3	1183	LED			1 pc.		2241443
		LED	with roof mount	600 W	1 pc.	Please ensure that the machine is equipped with a power socket.	2484916
			with roof mount	2 kW	1 pc.	Please ensure that the machine is equipped with a power socket.	2196074
			with roof mount	2 kW	2 pc.	Please ensure that the machine is equipped with a power socket.	2196075
SUPER 1800-2	1182		with mount	2 kW	1 pc.		2090337
			with roof mount	2 kW	2 pc.		2090341
			with roof mount	2 kW	1 pc.		2090340
			with mount	2 kW	2 pc.		2090339
SUPER 1800-3	1482	LED			1 pc.		2241443
		LED	with roof mount	600 W	1 pc.	Please ensure that the machine is equipped with a power socket.	2484916
			with roof mount	2 kW	1 pc.	Please ensure that the machine is equipped with a power socket.	2196074
			with roof mount	2 kW	2 pc.	Please ensure that the machine is equipped with a power socket.	2196075

LIGHT BALLOONS							
Series code	Serial code	Type	Mount	Power	Pack-age con-tent	Please note	Part no.
SUPER 1800-3i	1482	LED			1 pc.		2241443
		LED	with roof mount	600 W	1 pc.	Please ensure that the machine is equipped with a power socket.	2484916
			with roof mount	2 kW	1 pc.	Please ensure that the machine is equipped with a power socket.	2196074
			with roof mount	2 kW	2 pc.	Please ensure that the machine is equipped with a power socket.	2196075
SUPER 1803-2	0883		with mount	2 kW	1 pc.		2090337
			with roof mount	2 kW	1 pc.		2090340
			with roof mount	2 kW	2 pc.		2090341
			with mount	2 kW	2 pc.		2090339
SUPER 1803-3	1083	LED			1 pc.		2241443
		LED	with roof mount	600 W	1 pc.	Please ensure that the machine is equipped with a power socket.	2484916
			with roof mount	2 kW	1 pc.	Please ensure that the machine is equipped with a power socket.	2196074
			with roof mount	2 kW	2 pc.	Please ensure that the machine is equipped with a power socket.	2196075
SUPER 1803-3i	1083	LED			1 pc.		2241443
		LED	with roof mount	600 W	1 pc.	Please ensure that the machine is equipped with a power socket.	2484916
			with roof mount	2 kW	1 pc.	Please ensure that the machine is equipped with a power socket.	2196074
			with roof mount	2 kW	2 pc.	Please ensure that the machine is equipped with a power socket.	2196075
SUPER 1900-2	0719		with mount	2 kW	1 pc.		2090337

LIGHT BALLOONS

Series code	Serial code	Type	Mount	Power	Package content	Please note	Part no.
SUPER 1900-2	0719		with roof mount	2 kW	2 pc.		2090341
			with roof mount	2 kW	1 pc.		2090340
			with mount	2 kW	2 pc.		2090339
SUPER 1900-3	0819	LED			1 pc.		2241443
			with roof mount	2 kW	2 pc.	Please ensure that the machine is equipped with a power socket.	2196075
		LED	with roof mount	600 W	1 pc.	Please ensure that the machine is equipped with a power socket.	2484916
			with roof mount	2 kW	1 pc.	Please ensure that the machine is equipped with a power socket.	2196074
SUPER 1900-3i	0819	LED			1 pc.		2241443
			with roof mount	2 kW	2 pc.	Please ensure that the machine is equipped with a power socket.	2196075
		LED	with roof mount	600 W	1 pc.	Please ensure that the machine is equipped with a power socket.	2484916
			with roof mount	2 kW	1 pc.	Please ensure that the machine is equipped with a power socket.	2196074
SUPER 2100-2	0719		with mount	2 kW	1 pc.		2090337
			with roof mount	2 kW	2 pc.		2090341
			with roof mount	2 kW	1 pc.		2090340
			with mount	2 kW	2 pc.		2090339
SUPER 2100-3	0819	LED			1 pc.		2241443
			with roof mount	2 kW	2 pc.	Please ensure that the machine is equipped with a power socket.	2196075
		LED	with roof mount	600 W	1 pc.	Please ensure that the machine is equipped with a power socket.	2484916

LIGHT BALLOONS							
Series code	Serial code	Type	Mount	Power	Package content	Please note	Part no.
SUPER 2100-3	0819		with roof mount	2 kW	1 pc.	Please ensure that the machine is equipped with a power socket.	2196074
SUPER 2100-3i	0819	LED			1 pc.		2241443
			with roof mount	2 kW	2 pc.	Please ensure that the machine is equipped with a power socket.	2196075
		LED	with roof mount	600 W	1 pc.	Please ensure that the machine is equipped with a power socket.	2484916
			with roof mount	2 kW	1 pc.	Please ensure that the machine is equipped with a power socket.	2196074
SUPER 3000-2	0874		with roof mount	2 kW	1 pc.		2135461
			with mount	2 kW	2 pc.		2135469
			with roof mount	2 kW	2 pc.		2135465
			with mount	2 kW	1 pc.		2135464
SUPER 3000-3	1074	LED			1 pc.		2241443
		LED	with roof mount	600 W	1 pc.	Please ensure that the machine is equipped with a power socket.	2484916
SUPER 1800-2 SJ	1182		with mount	2 kW	2 pc.		2132558
			with mount	2 kW	1 pc.		2117491
MT 3000-2	0761		with roof mount	2 kW	2 pc.		2142965
			with mount	2 kW	1 pc.		2192564
			with roof mount	2 kW	1 pc.		2192563
			with mount	2 kW	2 pc.		2142966
MT 3000-2i	0761		with roof mount	2 kW	2 pc.		2142965
			with mount	2 kW	1 pc.		2192564
			with roof mount	2 kW	1 pc.		2192563
			with mount	2 kW	2 pc.		2142966

LIGHT BALLOONS

Series code	Serial code	Type	Mount	Power	Package content	Please note	Part no.
MT 3000-3	0861				1 pc.		2619219
					1 pc.		2619286
					1 pc.		2619312
		LED	with roof mount	600 W	1 pc.	Please ensure that the machine is equipped with a power socket.	2484916
MT 3000-3i	0861				1 pc.		2619286
					1 pc.		2619312
					1 pc.		2619219
		LED	with roof mount	600 W	1 pc.	Please ensure that the machine is equipped with a power socket.	2484916

Original VÖGELE

KEYS

The available spare keys ensure that any machine operator can always move the machine or open locked areas of the machine containing components that need to be protected against vandalism. We therefore recommend that you order additional keys if the keys supplied as standard are not sufficient for the operating personnel.

> Read more online

CONTROL CABINET KEYS

Control cabinet key for the electrical cabinets of all VÖGELE pavers and screeds.

CONTROL CABINET KEYS		
Series code	Serial code	Part no.
SUPER 700	0790	4618270022
SUPER 700-3	0890	4618270022
SUPER 700-3i	0890	4618270022
SUPER 800	0790	4618270022
SUPER 800-3	0890	4618270022

CONTROL CABINET KEYS		
Series code	Serial code	Part no.
SUPER 800-3i	0890	4618270022
SUPER 700	0990	4618270022
SUPER 800	0990	4618270022
SUPER 1100-2	0811	4618270022
SUPER 1100-3	1011, 1411	4618270022
SUPER 1100-3i	1011, 1411	4618270022
SUPER 1103-2	0911	4618270022
SUPER 1103-3	1111, 1511	4618270022
SUPER 1103-3i	1111, 1511	4618270022
SUPER 1300-2	0811	4618270022
SUPER 1300-3	1011, 1411	4618270022
SUPER 1300-3i	1011, 1411	4618270022
SUPER 1303-2	0911	4618270022
SUPER 1303-3	1111, 1511	4618270022
SUPER 1303-3i	1111, 1511	4618270022

KEY RINGS

The practical key rings from VÖGELE keep all your spare keys together in one place.

KEY RINGS		
Series code	Serial code	Part no.
SUPER 700	0790	3516031120
SUPER 700-3	0890	3516031120
SUPER 700-3i	0890	3516031120

KEYS

KEY RINGS		
Series code	Serial code	Part no.
SUPER 800	0790	3516031120
SUPER 800-3	0890	3516031120
SUPER 800-3i	0890	3516031120
SUPER 700	0990	3516031120
SUPER 800	0990	3516031120
SUPER 1100-2	0811	3516031120
SUPER 1100-3	1011, 1411	3516031120
SUPER 1100-3i	1011, 1411	3516031120
SUPER 1103-2	0911	3516031120
SUPER 1103-3	1111, 1511	3516031120
SUPER 1103-3i	1111, 1511	3516031120
SUPER 1300-2	0811	3516031120
SUPER 1300-3	1011, 1411	3516031120
SUPER 1300-3i	1011, 1411	3516031120
SUPER 1303-2	0911	3516031120
SUPER 1303-3	1111, 1511	3516031120
SUPER 1303-3i	1111, 1511	3516031120
SUPER 1600-1	0782	3516031120
SUPER 1600-2	1182	3516031120
SUPER 1600-3	1582	3516031120
SUPER 1600-3i	1582	3516031120
SUPER 1603-1	0783	3516031120
SUPER 1603-2	0883	3516031120
SUPER 1603-3i	1183	3516031120
SUPER 1603-3	1183	3516031120
SUPER 1700-3	1982	3516031120
SUPER 1700-3i	1982	3516031120

KEY RINGS		
Series code	Serial code	Part no.
SUPER 1703-3	1283	3516031120
SUPER 1703-3i	1283	3516031120
SUPER 1800-1	0782	3516031120
SUPER 1800-2	1182	3516031120
SUPER 1800-3	1482	3516031120
SUPER 1800-3i	1482	3516031120
SUPER 1803-1	0783	3516031120
SUPER 1803-2	0883	3516031120
SUPER 1803-3	1083	3516031120
SUPER 1803-3i	1083	3516031120
SUPER 1900-2	0719	3516031120
SUPER 1900-3	0819	3516031120
SUPER 1900-3i	0819	3516031120
SUPER 2000-3	1174	3516031120
SUPER 2000-3i	1174	3516031120
SUPER 2003-3	0975	3516031120
SUPER 2003-3i	0975	3516031120
SUPER 2100-2	0719	3516031120
SUPER 2100-2 IP	0719	3516031120
SUPER 2100-3	0819	3516031120
SUPER 2100-3i	0819	3516031120
SUPER 3000-2	0874	3516031120
SUPER 3000-3	1074	3516031120
SUPER 1800-2 SJ	1182	3516031120
SUPER 1800-3 SJ	1482	3516031120
SUPER 1800-3i SJ	1482	3516031120
MT 3000-2	0761	3516031120

Original VÖGELE

KEYS

KEY RINGS		
Series code	Serial code	Part no.
MT 3000-2i	0761	3516031120
MT 3000-3	0861	3516031120
MT 3000-3i	0861	3516031120

TANK KEY

Our tank keys enable you to open and close the tank lids of all VÖGELE machines.

TANK KEY		
Series code	Serial code	Part no.
SUPER 700	0790	4619112010
SUPER 700-3	0890	4619112010
SUPER 700-3i	0890	4619112010
SUPER 800	0790	4619112010
SUPER 800-3	0890	4619112010
SUPER 800-3i	0890	4619112010
SUPER 700	0990	4619112010
SUPER 800	0990	4619112010
SUPER 1100-2	0811	4619112010
SUPER 1100-3	1011, 1411	4619112010
SUPER 1100-3i	1011, 1411	4619112010
SUPER 1103-2	0911	4619112010
SUPER 1103-3	1111, 1511	4619112010
SUPER 1103-3i	1111, 1511	4619112010
SUPER 1300-2	0811	4619112010

TANK KEY		
Series code	Serial code	Part no.
SUPER 1300-3	1011, 1411	4619112010
SUPER 1300-3i	1011, 1411	4619112010
SUPER 1303-2	0911	4619112010
SUPER 1303-3	1111, 1511	4619112010
SUPER 1303-3i	1111, 1511	4619112010
SUPER 1600-1	0782	4619112010
SUPER 1600-2	1182	4619112010
SUPER 1600-3	1582	4619112010
SUPER 1600-3i	1582	4619112010
SUPER 1603-1	0783	4619112010
SUPER 1603-2	0883	4619112010
SUPER 1603-3i	1183	4619112010
SUPER 1603-3	1183	4619112010
SUPER 1700-3	1982	4619112010
SUPER 1700-3i	1982	4619112010
SUPER 1703-3	1283	4619112010
SUPER 1703-3i	1283	4619112010
SUPER 1800-1	0782	4619112010
SUPER 1800-2	1182	4619112010
SUPER 1800-3	1482	4619112010
SUPER 1800-3i	1482	4619112010
SUPER 1803-1	0783	4619112010
SUPER 1803-2	0883	4619112010
SUPER 1803-3	1083	4619112010
SUPER 1803-3i	1083	4619112010
SUPER 1900-2	0719	4619112010
SUPER 1900-3	0819	4619112010

KEYS

TANK KEY		
Series code	Serial code	Part no.
SUPER 1900-3i	0819	4619112010
SUPER 2000-3	1174	4619112010
SUPER 2000-3i	1174	4619112010
SUPER 2003-3	0975	4619112010
SUPER 2003-3i	0975	4619112010
SUPER 2100-2	0719	4619112010
SUPER 2100-2 IP	0719	4619112010
SUPER 2100-3	0819	4619112010
SUPER 2100-3i	0819	4619112010
SUPER 3000-2	0874	4619112010
SUPER 3000-3	1074	4619112010
SUPER 1800-2 SJ	1182	4619112010
SUPER 1800-3 SJ	1482	4619112010
SUPER 1800-3i SJ	1482	4619112010
MT 3000-2	0761	4619112010
MT 3000-2i	0761	4619112010
MT 3000-3	0861	4619112010
MT 3000-3i	0861	4619112010

SQUARE KEY

Square keys from VÖGELE can be used to open all square-headed screws with ease.

SQUARE KEY		
Series code	Serial code	Part no.
SUPER 700	0790	4618382084
SUPER 700-3	0890	4618382084
SUPER 700-3i	0890	4618382084
SUPER 800	0790	4618382084
SUPER 800-3	0890	4618382084
SUPER 800-3i	0890	4618382084
SUPER 700	0990	4618382084
SUPER 800	0990	4618382084
SUPER 1100-2	0811	4618382084
SUPER 1100-3	1011, 1411	4618382084
SUPER 1100-3i	1011, 1411	4618382084
SUPER 1103-2	0911	4618382084
SUPER 1103-3	1111, 1511	4618382084
SUPER 1103-3i	1111, 1511	4618382084
SUPER 1300-2	0811	4618382084
SUPER 1300-3	1011, 1411	4618382084
SUPER 1300-3i	1011, 1411	4618382084
SUPER 1303-2	0911	4618382084
SUPER 1303-3	1111, 1511	4618382084
SUPER 1303-3i	1111, 1511	4618382084
SUPER 1600-1	0782	4618382084

KEYS

SQUARE KEY		
Series code	Serial code	Part no.
SUPER 1600-2	1182	4618382084
SUPER 1600-3	1582	4618382084
SUPER 1600-3i	1582	4618382084
SUPER 1603-1	0783	4618382084
SUPER 1603-2	0883	4618382084
SUPER 1603-3i	1183	4618382084
SUPER 1603-3	1183	4618382084
SUPER 1700-3	1982	4618382084
SUPER 1700-3i	1982	4618382084
SUPER 1703-3	1283	4618382084
SUPER 1703-3i	1283	4618382084
SUPER 1800-1	0782	4618382084
SUPER 1800-2	1182	4618382084
SUPER 1800-3	1482	4618382084
SUPER 1800-3i	1482	4618382084
SUPER 1803-1	0783	4618382084
SUPER 1803-2	0883	4618382084
SUPER 1803-3	1083	4618382084
SUPER 1803-3i	1083	4618382084
SUPER 1900-2	0719	4618382084
SUPER 1900-3	0819	4618382084
SUPER 1900-3i	0819	4618382084
SUPER 2000-3	1174	4618382084
SUPER 2000-3i	1174	4618382084
SUPER 2003-3	0975	4618382084
SUPER 2003-3i	0975	4618382084
SUPER 2100-2	0719	4618382084

SQUARE KEY		
Series code	Serial code	Part no.
SUPER 2100-2 IP	0719	4618382084
SUPER 2100-3	0819	4618382084
SUPER 2100-3i	0819	4618382084
SUPER 3000-2	0874	4618382084
SUPER 3000-3	1074	4618382084
SUPER 1800-2 SJ	1182	4618382084
SUPER 1800-3 SJ	1482	4618382084
SUPER 1800-3i SJ	1482	4618382084
MT 3000-2	0761	4618382084
MT 3000-2i	0761	4618382084
MT 3000-3	0861	4618382084
MT 3000-3i	0861	4618382084

IGNITION KEYS

VÖGELE ignition keys are needed to open and start your VÖGELE pavers and screeds.

IGNITION KEYS		
Series code	Serial code	Part no.
SUPER 700	0790	3515046032
SUPER 700-3	0890	3515046032
SUPER 700-3i	0890	3515046032
SUPER 800	0790	3515046032
SUPER 800-3	0890	3515046032
SUPER 800-3i	0890	3515046032

KEYS

IGNITION KEYS		
Series code	Serial code	Part no.
SUPER 700	0990	3515046032
SUPER 800	0990	3515046032
SUPER 1100-2	0811	3515046032
SUPER 1100-3	1011, 1411	3515046032
SUPER 1100-3i	1011, 1411	3515046032
SUPER 1103-2	0911	3515046032
SUPER 1103-3	1111, 1511	3515046032
SUPER 1103-3i	1111, 1511	3515046032
SUPER 1300-2	0811	3515046032
SUPER 1300-3	1011, 1411	3515046032
SUPER 1300-3i	1011, 1411	3515046032
SUPER 1303-2	0911	3515046032
SUPER 1303-3	1111, 1511	3515046032
SUPER 1303-3i	1111, 1511	3515046032
SUPER 1600-1	0782	3515046032
SUPER 1600-2	1182	3515046032
SUPER 1600-3	1582	3515046032
SUPER 1600-3i	1582	3515046032
SUPER 1603-1	0783	3515046032
SUPER 1603-2	0883	3515046032
SUPER 1603-3i	1183	3515046032
SUPER 1603-3	1183	3515046032
SUPER 1700-3	1982	3515046032
SUPER 1700-3i	1982	3515046032
SUPER 1703-3	1283	3515046032
SUPER 1703-3i	1283	3515046032
SUPER 1800-1	0782	3515046032

IGNITION KEYS		
Series code	Serial code	Part no.
SUPER 1800-2	1182	3515046032
SUPER 1800-3	1482	3515046032
SUPER 1800-3i	1482	3515046032
SUPER 1803-1	0783	3515046032
SUPER 1803-2	0883	3515046032
SUPER 1803-3	1083	3515046032
SUPER 1803-3i	1083	3515046032
SUPER 1900-2	0719	3515046032
SUPER 1900-3	0819	3515046032
SUPER 1900-3i	0819	3515046032
SUPER 2000-3	1174	3515046032
SUPER 2000-3i	1174	3515046032
SUPER 2003-3	0975	3515046032
SUPER 2003-3i	0975	3515046032
SUPER 2100-2	0719	3515046032
SUPER 2100-2 IP	0719	3515046032
SUPER 2100-3	0819	3515046032
SUPER 2100-3i	0819	3515046032
SUPER 3000-2	0874	3515046032
SUPER 3000-3	1074	3515046032
SUPER 1800-2 SJ	1182	3515046032
SUPER 1800-3 SJ	1482	3515046032
SUPER 1800-3i SJ	1482	3515046032
MT 3000-2	0761	3515046032
MT 3000-2i	0761	3515046032
MT 3000-3	0861	3515046032
MT 3000-3i	0861	3515046032

Original VÖGELE

TELEMATICS

WITOS, the telematics system from the WIRTGEN GROUP, offers an optimised package of solutions to increase your productivity on the construction site. The intelligent WITOS FleetView telematics system from the WIRTGEN GROUP supports fleet and service management for machines from WIRTGEN, VÖGELE, HAMM and KLEEMANN. Thanks to the system-supported processing, transmission, visualisation and evaluation of machine and position data, fleet and service management becomes even more efficient during day-to-day operations. With WITOS FleetView, you can keep track of your fleet of machines at all times.

Please note that you will need two components if you are planning to retrofit WITOS FleetView. The retrofit kit containing a set consisting only of cables and the assembly kit with the appropriate TCU for your country.

> Read more online

WITOS FLEETVIEW

WITOS FleetView fleet management gives you a permanent overview of the condition of your machines.

WITOS FleetView is not available in all countries and for all series – please contact your local sales and service company if you have any questions.

WITOS FLEETVIEW

Series code	Serial code	Series range	Part	Package includes	Part no.
SUPER 700	0790	20 - 9999	WITOS FleetView retrofit kit	incl. cable set, without TCU	2430485
				TCU variant 2, 4G (EU)	2761155
				TCU variant 4, 4G (Japan)	2880231
				TCU variant 3, 4G (North America)	2761157
				TCU variant 1, 3G (Russia)	2412173
SUPER 700-3	0890	20 - 9999	WITOS FleetView retrofit kit	incl. cable set, without TCU	2912556
				TCU variant 2, 4G (EU)	2761155
				TCU variant 1, 3G (Russia)	2412173
				TCU variant 3, 4G (North America)	2761157
				TCU variant 4, 4G (Japan)	2880231
SUPER 700-3i	0890	20 - 9999	WITOS FleetView retrofit kit	incl. cable set, without TCU	2912556
				TCU variant 2, 4G (EU)	2761155
				TCU variant 4, 4G (Japan)	2880231
				TCU variant 1, 3G (Russia)	2412173
				TCU variant 3, 4G (North America)	2761157
SUPER 800	0790	20 - 9999	WITOS FleetView retrofit kit	incl. cable set, without TCU	2430485
				TCU variant 3, 4G (North America)	2761157
				TCU variant 2, 4G (EU)	2761155
				TCU variant 1, 3G (Russia)	2412173
				TCU variant 4, 4G (Japan)	2880231

WITOS FLEETVIEW					
Series code	Serial code	Series range	Part	Package includes	Part no.
SUPER 800-3	0890	20 - 9999	WITOS FleetView retrofit kit	incl. cable set, without TCU	2912556
				TCU variant 4, 4G (Japan)	2880231
				TCU variant 1, 3G (Russia)	2412173
				TCU variant 3, 4G (North America)	2761157
				TCU variant 2, 4G (EU)	2761155
SUPER 800-3i	0890	20 - 9999	WITOS FleetView retrofit kit	incl. cable set, without TCU	2912556
				TCU variant 3, 4G (North America)	2761157
				TCU variant 4, 4G (Japan)	2880231
				TCU variant 1, 3G (Russia)	2412173
				TCU variant 2, 4G (EU)	2761155
SUPER 700	0990	20 - 9999	WITOS FleetView retrofit kit	TCU variant 2, 4G (EU)	2761155
				TCU variant 3, 4G (North America)	2761157
				TCU variant 1, 3G (Russia)	2412173
				TCU variant 4, 4G (Japan)	2880231
				incl. cable set, without TCU	2912556
SUPER 800	0990	20 - 9999	WITOS FleetView retrofit kit	incl. cable set, without TCU	2912556
				TCU variant 4, 4G (Japan)	2880231
				TCU variant 2, 4G (EU)	2761155
				TCU variant 3, 4G (North America)	2761157
				TCU variant 1, 3G (Russia)	2412173
SUPER 1100-3	1411	20 - 9999	WITOS FleetView retrofit kit	incl. cable set, without TCU	2912557
				TCU variant 4, 4G (Japan)	2880231
				TCU variant 3, 4G (North America)	2761157
				TCU variant 1, 3G (Russia)	2412173
				TCU variant 2, 4G (EU)	2761155
SUPER 1100-3i	1411	20 - 9999	WITOS FleetView retrofit kit	TCU variant 1, 3G (Russia)	2412173

WITOS FLEETVIEW

Series code	Serial code	Series range	Part	Package includes	Part no.
SUPER 1100-3i	1411	20 - 9999	WITOS FleetView retrofit kit	incl. cable set, without TCU	2912557
				TCU variant 2, 4G (EU)	2761155
				TCU variant 4, 4G (Japan)	2880231
				TCU variant 3, 4G (North America)	2761157
SUPER 1103-3	1511	20 - 9999	WITOS FleetView retrofit kit	TCU variant 3, 4G (North America)	2761157
				incl. cable set, without TCU	2912557
				TCU variant 1, 3G (Russia)	2412173
				TCU variant 4, 4G (Japan)	2880231
				TCU variant 2, 4G (EU)	2761155
SUPER 1103-3i	1511	20 - 9999	WITOS FleetView retrofit kit	TCU variant 4, 4G (Japan)	2880231
				incl. cable set, without TCU	2912557
				TCU variant 3, 4G (North America)	2761157
				TCU variant 1, 3G (Russia)	2412173
				TCU variant 2, 4G (EU)	2761155
SUPER 1300-3	1411	20 - 9999	WITOS FleetView retrofit kit	incl. cable set, without TCU	2912557
				TCU variant 1, 3G (Russia)	2412173
				TCU variant 3, 4G (North America)	2761157
				TCU variant 2, 4G (EU)	2761155
				TCU variant 4, 4G (Japan)	2880231
SUPER 1300-3i	1411	20 - 9999	WITOS FleetView retrofit kit	incl. cable set, without TCU	2912557
				TCU variant 2, 4G (EU)	2761155
				TCU variant 1, 3G (Russia)	2412173
				TCU variant 3, 4G (North America)	2761157
				TCU variant 4, 4G (Japan)	2880231
SUPER 1303-3	1511	20 - 9999	WITOS FleetView retrofit kit	incl. cable set, without TCU	2912557
				TCU variant 1, 3G (Russia)	2412173

WITOS FLEETVIEW					
Series code	Serial code	Series range	Part	Package includes	Part no.
SUPER 1303-3	1511	20 - 9999	WITOS FleetView retrofit kit	TCU variant 4, 4G (Japan)	2880231
				TCU variant 3, 4G (North America)	2761157
				TCU variant 2, 4G (EU)	2761155
SUPER 1303-3i	1511	20 - 9999	WITOS FleetView retrofit kit	TCU variant 2, 4G (EU)	2761155
				incl. cable set, without TCU	2912557
				TCU variant 4, 4G (Japan)	2880231
				TCU variant 3, 4G (North America)	2761157
				TCU variant 1, 3G (Russia)	2412173
SUPER 1600-3	1582	20 - 9999	WITOS FleetView retrofit kit	incl. cable set, without TCU	2866313
				TCU variant 3, 4G (North America)	2761157
				TCU variant 2, 4G (EU)	2761155
				TCU variant 1, 3G (Russia)	2412173
				TCU variant 4, 4G (Japan)	2880231
			WITOS FleetView retrofit kit	incl. cable set, without TCU	2370243
SUPER 1600-3i	1582	20 - 9999	WITOS FleetView retrofit kit	TCU variant 1, 3G (Russia)	2412173
				incl. cable set, without TCU	2866313
				TCU variant 4, 4G (Japan)	2880231
				TCU variant 2, 4G (EU)	2761155
				TCU variant 3, 4G (North America)	2761157
			WITOS FleetView retrofit kit	incl. cable set, without TCU	2370243
SUPER 1603-3i	1183	20 - 9999	WITOS FleetView retrofit kit	TCU variant 3, 4G (North America)	2761157
				incl. cable set, without TCU	2866313
				TCU variant 1, 3G (Russia)	2412173
				TCU variant 2, 4G (EU)	2761155
				TCU variant 4, 4G (Japan)	2880231
			WITOS FleetView retrofit kit	incl. cable set, without TCU	2370243

WITOS FLEETVIEW

Series code	Serial code	Series range	Part	Package includes	Part no.
SUPER 1603-3	1183	20 - 9999	WITOS FleetView retrofit kit	TCU variant 3, 4G (North America)	2761157
				TCU variant 1, 3G (Russia)	2412173
				TCU variant 4, 4G (Japan)	2880231
				incl. cable set, without TCU	2866313
				TCU variant 2, 4G (EU)	2761155
			WITOS FleetView retrofit kit	incl. cable set, without TCU	2370243
SUPER 1700-3	1982	20 - 9999	WITOS FleetView retrofit kit	incl. cable set, without TCU	2866313
				TCU variant 4, 4G (Japan)	2880231
				TCU variant 1, 3G (Russia)	2412173
				TCU variant 2, 4G (EU)	2761155
				TCU variant 3, 4G (North America)	2761157
			WITOS FleetView retrofit kit	incl. cable set, without TCU	2370243
SUPER 1700-3i	1982	20 - 9999	WITOS FleetView retrofit kit	TCU variant 2, 4G (EU)	2761155
				incl. cable set, without TCU	2866313
				TCU variant 3, 4G (North America)	2761157
				TCU variant 4, 4G (Japan)	2880231
				TCU variant 1, 3G (Russia)	2412173
			WITOS FleetView retrofit kit	incl. cable set, without TCU	2370243
SUPER 1703-3	1283	20 - 9999	WITOS FleetView retrofit kit	TCU variant 1, 3G (Russia)	2412173
				incl. cable set, without TCU	2866313
				TCU variant 2, 4G (EU)	2761155
				TCU variant 4, 4G (Japan)	2880231
				TCU variant 3, 4G (North America)	2761157
			WITOS FleetView retrofit kit	incl. cable set, without TCU	2370243
SUPER 1703-3i	1283	20 - 9999	WITOS FleetView retrofit kit	TCU variant 3, 4G (North America)	2761157
				incl. cable set, without TCU	2866313

WITOS FLEETVIEW					
Series code	Serial code	Series range	Part	Package includes	Part no.
SUPER 1703-3i	1283	20 - 9999	WITOS FleetView retrofit kit	TCU variant 1, 3G (Russia)	2412173
				TCU variant 2, 4G (EU)	2761155
				TCU variant 4, 4G (Japan)	2880231
			WITOS FleetView retrofit kit	incl. cable set, without TCU	2370243
SUPER 1800-3	1482	20 - 9999	WITOS FleetView retrofit kit	TCU variant 2, 4G (EU)	2761155
				incl. cable set, without TCU	2866313
				TCU variant 1, 3G (Russia)	2412173
				TCU variant 4, 4G (Japan)	2880231
				TCU variant 3, 4G (North America)	2761157
			WITOS FleetView retrofit kit	incl. cable set, without TCU	2370243
SUPER 1800-3i	1482	20 - 9999	WITOS FleetView retrofit kit	TCU variant 4, 4G (Japan)	2880231
				incl. cable set, without TCU	2866313
				TCU variant 2, 4G (EU)	2761155
				TCU variant 3, 4G (North America)	2761157
				TCU variant 1, 3G (Russia)	2412173
			WITOS FleetView retrofit kit	incl. cable set, without TCU	2370243
SUPER 1803-3	1083	20 - 9999	WITOS FleetView retrofit kit	TCU variant 3, 4G (North America)	2761157
				TCU variant 2, 4G (EU)	2761155
				TCU variant 1, 3G (Russia)	2412173
				incl. cable set, without TCU	2629825
				TCU variant 4, 4G (Japan)	2880231
			WITOS FleetView retrofit kit	incl. cable set, without TCU	2370243
SUPER 1803-3i	1083	20 - 9999	WITOS FleetView retrofit kit	TCU variant 3, 4G (North America)	2761157
				incl. cable set, without TCU	2629825
				TCU variant 1, 3G (Russia)	2412173
				TCU variant 4, 4G (Japan)	2880231

WITOS FLEETVIEW

Series code	Serial code	Series range	Part	Package includes	Part no.
SUPER 1803-3i	1083	20 - 9999	WITOS FleetView retrofit kit	TCU variant 2, 4G (EU)	2761155
			WITOS FleetView retrofit kit	incl. cable set, without TCU	2370243
SUPER 1900-3	0819	20 - 9999	WITOS FleetView retrofit kit	TCU variant 1, 3G (Russia)	2412173
				incl. cable set, without TCU	2912519
				TCU variant 4, 4G (Japan)	2880231
				TCU variant 2, 4G (EU)	2761155
				TCU variant 3, 4G (North America)	2761157
			WITOS FleetView retrofit kit	incl. cable set, without TCU	2370243
SUPER 1900-3i	0819	20 - 9999	WITOS FleetView retrofit kit	incl. cable set, without TCU	2912519
				TCU variant 1, 3G (Russia)	2412173
				TCU variant 3, 4G (North America)	2761157
				TCU variant 4, 4G (Japan)	2880231
				TCU variant 2, 4G (EU)	2761155
			WITOS FleetView retrofit kit	incl. cable set, without TCU	2370243
SUPER 2000-3	1174	20 - 9999	WITOS FleetView retrofit kit	TCU variant 4, 4G (Japan)	2880231
				incl. cable set, without TCU	2912519
				TCU variant 2, 4G (EU)	2761155
				TCU variant 1, 3G (Russia)	2412173
				TCU variant 3, 4G (North America)	2761157
			WITOS FleetView retrofit kit	incl. cable set, without TCU	2370243
SUPER 2000-3i	1174	20 - 9999	WITOS FleetView retrofit kit	TCU variant 4, 4G (Japan)	2880231
				incl. cable set, without TCU	2912519
				TCU variant 2, 4G (EU)	2761155
				TCU variant 3, 4G (North America)	2761157
				TCU variant 1, 3G (Russia)	2412173
			WITOS FleetView retrofit kit	incl. cable set, without TCU	2370243

WITOS FLEETVIEW					
Series code	Serial code	Series range	Part	Package includes	Part no.
SUPER 2003-3	0975	20 - 9999	WITOS FleetView retrofit kit	TCU variant 1, 3G (Russia)	2412173
				TCU variant 3, 4G (North America)	2761157
				TCU variant 2, 4G (EU)	2761155
				incl. cable set, without TCU	2912519
				TCU variant 4, 4G (Japan)	2880231
			WITOS FleetView retrofit kit	incl. cable set, without TCU	2370243
SUPER 2003-3i	0975	20 - 9999	WITOS FleetView retrofit kit	TCU variant 2, 4G (EU)	2761155
				incl. cable set, without TCU	2912519
				TCU variant 1, 3G (Russia)	2412173
				TCU variant 3, 4G (North America)	2761157
				TCU variant 4, 4G (Japan)	2880231
			WITOS FleetView retrofit kit	incl. cable set, without TCU	2370243
SUPER 2100-3	0819	20 - 9999	WITOS FleetView retrofit kit	TCU variant 4, 4G (Japan)	2880231
				incl. cable set, without TCU	2912519
				TCU variant 1, 3G (Russia)	2412173
				TCU variant 2, 4G (EU)	2761155
				TCU variant 3, 4G (North America)	2761157
			WITOS FleetView retrofit kit	incl. cable set, without TCU	2370243
SUPER 2100-3i	0819	20 - 9999	WITOS FleetView retrofit kit	incl. cable set, without TCU	2912519
				TCU variant 1, 3G (Russia)	2412173
				TCU variant 2, 4G (EU)	2761155
				TCU variant 3, 4G (North America)	2761157
				TCU variant 4, 4G (Japan)	2880231
			WITOS FleetView retrofit kit	incl. cable set, without TCU	2370243
MT 3000-3	0861	20 - 9999	WITOS FleetView retrofit kit	incl. cable set, incl. TCU 4G EU	3037766
				incl. cable set, incl. TCU 3G Russia	3037765

WITOS FLEETVIEW					
Series code	Serial code	Series range	Part	Package includes	Part no.
MT 3000-3	0861	20 - 9999	WITOS FleetView retrofit kit	incl. cable set, incl. TCU 4G North America	3037767
MT 3000-3i	0861	20 - 9999	WITOS FleetView retrofit kit	incl. cable set, incl. TCU 3G Russia	3037765
				incl. cable set, incl. TCU 4G North America	3037767
				incl. cable set, incl. TCU 4G EU	3037766

Original VÖGELE

EMERGENCY KITS

Nothing is as important as the reliability of your VÖGELE paver. However, minor faults in the electrical or hydraulic systems can have a serious impact on your paver's operational readiness. Genuine VÖGELE emergency kits consist of a robust case containing all the small electrical and hydraulic components you need most to remedy technical faults during paving operations. The kit is an ideal way to ensure that your paver is always in peak working condition.

> Read more online

EMERGENCY KITS

VÖGELE emergency kits provide rapid assistance in the repair of electronic and hydraulic components.

EMERGENCY KITS			
Series code	Serial code	Version	Part no.
SUPER 700	0790	electro-hydraulic	2055594
SUPER 700-3	0890	electro-hydraulic	2257880
SUPER 700-3i	0890	electro-hydraulic	2257880
SUPER 800	0790	electro-hydraulic	2055594

EMERGENCY KITS			
Series code	Serial code	Version	Part no.
SUPER 800-3	0890	electro-hydraulic	2257880
SUPER 800-3i	0890	electro-hydraulic	2257880
SUPER 1100-2	0811	electro-hydraulic	2110715
SUPER 1100-3	1011, 1411	electro-hydraulic	2257880
SUPER 1100-3i	1011, 1411	electro-hydraulic	2257880
SUPER 1103-2	0911	electro-hydraulic	2110719
SUPER 1103-3	1111, 1511	electro-hydraulic	2257880
SUPER 1103-3i	1111, 1511	electro-hydraulic	2257880
SUPER 1300-2	0811	electro-hydraulic	2110715
SUPER 1300-3	1011, 1411	electro-hydraulic	2257880
SUPER 1300-3i	1011, 1411	electro-hydraulic	2257880
SUPER 1303-2	0911	electro-hydraulic	2110719
SUPER 1303-3	1111, 1511	electro-hydraulic	2257880
SUPER 1303-3i	1111, 1511	electro-hydraulic	2257880
SUPER 1600-1	0782	electro-hydraulic	2055583
SUPER 1600-2	1182	electro-hydraulic	2110709
SUPER 1600-3	1582	electro-hydraulic	2257880
SUPER 1600-3i	1582	electro-hydraulic	2257880
SUPER 1603-1	0783	electro-hydraulic	2055585
SUPER 1603-2	0883	electro-hydraulic	2110712
SUPER 1603-3i	1183	electro-hydraulic	2257880
SUPER 1603-3	1183	electro-hydraulic	2257880
SUPER 1700-3	1982	electro-hydraulic	2257880
SUPER 1700-3i	1982	electro-hydraulic	2257880
SUPER 1703-3	1283	electro-hydraulic	2257880
SUPER 1703-3i	1283	electro-hydraulic	2257880
SUPER 1800-1	0782	electro-hydraulic	2055583

Original VÖGELE

EMERGENCY KITS

EMERGENCY KITS			
Series code	Serial code	Version	Part no.
SUPER 1800-2	1182	electro-hydraulic	2110709
SUPER 1800-3	1482	electro-hydraulic	2257880
SUPER 1800-3i	1482	electro-hydraulic	2257880
SUPER 1803-1	0783	electro-hydraulic	2055585
SUPER 1803-2	0883	electro-hydraulic	2110712
SUPER 1803-3	1083	electro-hydraulic	2257880
SUPER 1803-3i	1083	electro-hydraulic	2257880
SUPER 1900-2	0719	electro-hydraulic	2055491
SUPER 1900-3	0819	electro-hydraulic	2257880
SUPER 1900-3i	0819	electro-hydraulic	2257880
SUPER 2000-3	1174	electro-hydraulic	2257880
SUPER 2000-3i	1174	electro-hydraulic	2257880
SUPER 2003-3	0975	electro-hydraulic	2257880
SUPER 2003-3i	0975	electro-hydraulic	2257880
SUPER 2100-2	0719	electro-hydraulic	2055491
SUPER 2100-3 HD	0819	electro-hydraulic	2257880
SUPER 2100-3i HD	0819	electro-hydraulic	2257880
SUPER 3000-2	0874	electro-hydraulic	2164865
SUPER 1800-3 SJ	1482	electro-hydraulic	2257880
SUPER 1800-3i SJ	1482	electro-hydraulic	2257880

TOOLS

Nothing is more important than the reliability of your machine. Whether in the workshop or directly on the construction site, with special tools from VÖGELE you always have the right tool at hand for the appropriate maintenance job. Sophisticated technology and ease of use are the hallmarks of these many small helpers in day-to-day construction site operations.

> Read more online

TOOLS FOR ELECTRICAL SYSTEMS

From the infrared temperature measuring device to the megaohmmeter to the test lead set – VÖGELE's tools for electrical systems offer everything you need to respond quickly in the event of unforeseen failures.

TOOLS FOR ELECTRICAL SYSTEMS				
Part	Version	Description	Size	Part no.
Infrared temperature measuring unit		Non-contact measurement via infrared sensor. With adjustable emission level for measuring the temperature of different surfaces. Infrared and contact measurement in one device. Includes belt clip and batteries.		2008493
Hand-held tachometer	digital	Universal measuring device for measuring rotational speed, velocity and length. Non-contact measurement via reflex marking. Contact measurement with clip-on adapter.		2008504

TOOLS

TOOLS FOR ELECTRICAL SYSTEMS				
Part	Version	Description	Size	Part no.
Clip-on ammeter		For measuring AC and DC current 0.3 to 700 A, AC and DC voltage 0 to 750 V, frequency 0.5 to 9999 Hz, resistance 0 to 4 kΩ, continuity testing, belt pouch included.		2008516
Megaohmmeter		For finding insulation faults in the heating system and for ohm measurements.		2014661
Test lead set		Test leads, test prods and crocodile clips for the for the megohmmeter.		2014662
Fluke multimeter		Multimeter for measuring voltage, amperes, ohms and hertz.		425191
Disassembly tool for crimp connectors		To disassemble the ring of crimp connectors.		437491
Extraction tool	for crimp connectors	Extractor for loosening the star ring of crimp connectors.		437591
Crimping pliers		For fitting 0.5 – 2.5 mm² crimp connectors.	0.5 – 2.5 mm²	449391

TOOLS FOR HYDRAULIC SYSTEMS

No service vehicle is complete without VÖGELE's hydraulic tools for repairing hydraulic components.

TOOLS FOR HYDRAULIC SYSTEMS		
Part	Description	Part no.
Vacuum pump	When working on the hydraulic system, it is extremely important to prevent oil from leaking. The vacuum pump can be used to create a vacuum in the air cavity above the hydraulic oil, which significantly minimises oil loss. For creating a stable pressure level in the hydraulic system, thus enabling repair work without a loss of oil – preventing environmental pollution. For leak testing the hydraulic system.	2008975
Hydraulic fittings kit	This case should not be missing from any service vehicle or workshop. It features a well-organized assortment of cutting rings, union nuts, Minimess fittings, SAE fittings as well as all of the standard fittings.	2056134

SERVICE CASE

With VÖGELE service cases, you have everything you need to carry out minor maintenance tasks quickly and easily on your own.

SERVICE CASE		
Part	Description	Part no.
Service tool kit	Set of screwdrivers and pliers, crimping pliers, various switches, sensors and relays, digital measuring tools (clamp ammeter, digital hand-held tachometer, infrared thermometer, megohmmeter, multimeter), pressure gauge and much more.	2024590
Electrical service kit	This kit contains all of the standard parts needed to quickly repair an electrical failure.	2052241
Toolbox	Benefit from our tool kit and maintain the operational readiness of your machine.	2296353
On-board tools	This vehicle tool kit is designed specifically for our machines and is something no machine should be without. It can be stowed easily, even in smaller compartments, and is always ready to use.	2309864
O-Ring box	This box contains a comprehensive range of O-rings for sealing leaks in the hydraulic system.	4614062005

OTHER TOOLS

Other tools such as various metering units and special nuts round off the portfolio. With VÖGELE tools, you can quickly and easily maintain your machines yourself.

OTHER TOOLS		
Part	Description	Part no.
Level	Length: 4 m, can be folded down to 1 m, 90 x 18 mm, without bubbles.	2034936
Paving thickness measuring unit	For measuring the asphalt thickness during the paving process.	2060727
Frequency meter	To measure the frequency, the frequency meter (sirometer) is held against a machine's housing while it is in operation and the meter displays the number of revolutions per minute (in increments of 1000). The lower scale displays the number of vibrations per second, i.e. in hertz.	4612070034
Special nut for hydraulic rams for pressure bars	For loosening and tightening the locking nut on hydraulic rams for pressure bars.	4618270012

Original HAMM

MAINTENANCE PARTS

Filling or lubricating your machine with a lubricant specially tailored to the application has a significant impact on the service life of the active parts in combustion engines, hydraulic components, gearboxes and bearings. WIRTGEN GROUP lubricants are optimised for your machine and therefore meet these special requirements perfectly. Combined with WIRTGEN GROUP filter sets and maintenance packages, our lubricants are the best choice to maintain the performance of your machine and permanently reduce maintenance costs.

> Read more online

FILTER SETS

WIRTGEN GROUP filter systems, which are designed to be perfectly compatible with our lubricants and operating agents, ensure that the systems remain clean and prevent damage to components, thus maximising the service life of your machines. The filter packages contain the filters required for the machine type's respective replacement interval. In order to ensure that the machine performs at its best, we recommend that you adhere to the specified replacement intervals.

FILTER SETS

Series code	Serial code	Series range	Cabin	First service	Replacement interval	Part no.
H 5i	H222	1 - 9999			2000 h	2428766
					1000 h	2428764
					500 h	2428761
	H270	1 - 718			2000 h	2428766
					1000 h	2428764
					500 h	2428761
		719 - 9999			500 h	2946581
					2000 h	2946599
					1000 h	2946583
				50 h		2935352
H 7i	H222	1 - 9999			500 h	2428761
					2000 h	2428766
					1000 h	2428764
	H270	1 - 718			2000 h	2428766
					1000 h	2428764
					500 h	2428761
		719 - 9999			500 h	2946581
					2000 h	2946599
					1000 h	2946583
				50 h		2935352

Due to possible technical changes, always refer to the information in the instruction manual.

FILTER SETS						
Series code	Serial code	Series range	Cabin	First service	Replacement interval	Part no.
H 10i	H235	1 - 2314			500 h; 1000 h	2521856
					2000 h	2527076
		2315 - 9999			2000 h	2932205
					500 h; 1000 h	2932203
				50 h		2932202
	H266	1 - 9999			500 h; 1000 h	2932203
					2000 h	2932205
				50 h		2932202
	H284	1 - 9999			500 h; 1000 h	2932203
				50 h		2932202
					2000 h	2932205
H 11i	H211	1 - 9999			500 h; 1000 h	2260053
				50 h		2308768
					2000 h	2260055
	H235	1 - 2314			2000 h	2527076
					500 h; 1000 h	2521856
		2315 - 9999			2000 h	2932205
					500 h; 1000 h	2932203
				50 h		2932202
	H266, H284	1 - 9999			2000 h	2932205
				50 h		2932202
					500 h; 1000 h	2932203
H 11ix	H210	1 - 9999			2000 h	2356671
					500 h; 1000 h	2356666
H 12i	H235	1 - 2314			500 h; 1000 h	2521856
					2000 h	2527076

Due to possible technical changes, always refer to the information in the instruction manual.

FILTER SETS

Series code	Serial code	Series range	Cabin	First service	Replacement interval	Part no.
H 12i	H235	2315 - 9999			2000 h	2932205
					500 h; 1000 h	2932203
				50 h		2932202
	H266	1 - 9999			500 h; 1000 h	2932203
				50 h		2932202
					2000 h	2932205
	H284	1 - 9999			2000 h	2932205
					500 h; 1000 h	2932203
				50 h		2932202
H 13i	H211	1 - 9999			500 h; 1000 h	2260053
				50 h		2308768
					2000 h	2260055
	H234	1 - 9999			2000 h	2546718
					500 h; 1000 h	2546715
	H267	1 - 83			2000 h	2546718
					500 h; 1000 h	2546715
		84 - 9999			500 h; 1000 h	2932200
				50 h		2932198
					2000 h	2932201
H 13ix	H210	1 - 9999			2000 h	2356671
					500 h; 1000 h	2356666
H 14i	H234	1 - 9999			2000 h	2546718
					500 h; 1000 h	2546715
	H267	1 - 83			500 h; 1000 h	2546715
					2000 h	2546718
		84 - 9999			500 h; 1000 h	2932200

Due to possible technical changes, always refer to the information in the instruction manual.

FILTER SETS						
Series code	Serial code	Series range	Cabin	First service	Replacement interval	Part no.
H 14i	H267	84 - 9999		50 h		2932198
					2000 h	2932201
H 16i	H211	1 - 9999			500 h; 1000 h	2260053
				50 h		2308768
					2000 h	2260055
	H234	1 - 9999			500 h; 1000 h	2546715
					2000 h	2546718
	H267	1 - 83			2000 h	2546718
					500 h; 1000 h	2546715
		84 - 9999		50 h		2932198
					2000 h	2932201
					500 h; 1000 h	2932200
H 18i	H202	1 - 9999		50 h		2194245
					2000 h	2204874
					500 h; 1000 h	2204871
	H233	1 - 9999			500 h; 1000 h	2555289
				50 h		2627654
					2000 h	2555290
	H268	1 - 192			2000 h	2555290
					500 h; 1000 h	2555289
				50 h		2627654
		193 - 9999			2000 h	2955609
				50 h		2932198
					500 h; 1000 h	2955608
H 20i	H202	1 - 9999		50 h		2194245
					2000 h	2204874

Due to possible technical changes, always refer to the information in the instruction manual.

FILTER SETS

Series code	Serial code	Series range	Cabin	First service	Replacement interval	Part no.
H 20i	H202	1 - 9999			500 h; 1000 h	2204871
	H233	1 - 9999			500 h; 1000 h	2555289
				50 h		2627654
					2000 h	2555290
	H268	1 - 192			2000 h	2555290
					500 h; 1000 h	2555289
				50 h		2627654
		193 - 9999		50 h		2932198
					2000 h	2955609
					500 h; 1000 h	2955608
H 25i	H202	1 - 9999		50 h		2194245
					2000 h	2204874
					500 h; 1000 h	2204871
	H233	1 - 9999			500 h; 1000 h	2555289
				50 h		2627654
					2000 h	2555290
	H268	1 - 192			2000 h	2555290
					500 h; 1000 h	2555289
				50 h		2627654
		193 - 9999		50 h		2932198
					2000 h	2955609
					500 h; 1000 h	2955608
H 25i VC	H238	1 - 9999			2000 h	2416551
					500 h; 1000 h	2416543
HC 180i	H256	1 - 374		50 h		3004452
					2000 h	3004458

Due to possible technical changes, always refer to the information in the instruction manual.

FILTER SETS						
Series code	Serial code	Series range	Cabin	First service	Replacement interval	Part no.
HC 180i	H256	1 - 374			500 h; 1000 h	3004454
		375 - 9999			500 h; 1000 h	WX3341608
				50 h		WX3341607
					2000 h	WX3341609
HC 200i	H256	1 - 374		50 h		3004452
					2000 h	3004458
					500 h; 1000 h	3004454
		375 - 9999			2000 h	WX3341609
				50 h		WX3341607
					500 h; 1000 h	WX3341608
HC 250i	H256	1 - 374			2000 h	3004458
				50 h		3004452
					500 h; 1000 h	3004454
		375 - 9999		50 h		WX3341607
					500 h; 1000 h	WX3341608
					2000 h	WX3341609
3205	H188	1 - 52		50 h		2057970
					500 h	2057971
					1000 h	2057972
					2000 h	2057973
		53 - 9999		50 h		2221165
					500 h	2221168
					1000 h	2221170
					2000 h	2221172
3307	H189	1 - 246			1000 h	2058132
					2000 h	2058133

Due to possible technical changes, always refer to the information in the instruction manual.

FILTER SETS

Series code	Serial code	Series range	Cabin	First service	Replacement interval	Part no.
3307	H189	1 - 246			500 h	2058131
				50 h		2058130
		247 - 9999			2000 h	2243409
					500 h	2243406
					1000 h	2243408
				50 h		2243713
3410	H179	1 - 9999		50 h		2060088
					2000 h	2060094
					1000 h	2060093
					500 h	2060092
	H206	1 - 9999		50 h		2130142
					500 h	2130143
					1000 h	2130145
					2000 h	2130147
	H217	1 - 261		50 h		2325208
					500 h; 1000 h	2325215
					2000 h	2325216
		262 - 9999		50 h		2501689
					500 h; 1000 h	2501690
					2000 h	2501691
	H221	1 - 9999		50 h		2545701
					2000 h	2545710
					500 h; 1000 h	2545708
	H269	1 - 9999			500 h	2034358
				50 h		2034356
					2000 h	2034360

Due to possible technical changes, always refer to the information in the instruction manual.

FILTER SETS						
Series code	Serial code	Series range	Cabin	First service	Replacement interval	Part no.
3410	H269	1 - 9999			1000 h	2034359
3411	H179	1 - 9999		50 h		2060088
					2000 h	2060094
					1000 h	2060093
					500 h	2060092
	H206	1 - 9999		50 h		2130142
					2000 h	2130147
					1000 h	2130145
					500 h	2130143
	H217	1 - 261		50 h		2325208
					500 h; 1000 h	2325215
					2000 h	2325216
		262 - 9999		50 h		2501689
					500 h; 1000 h	2501690
					2000 h	2501691
	H221	1 - 9999		50 h		2545701
					2000 h	2545710
					500 h; 1000 h	2545708
	H269	1 - 9999		50 h		2034356
					2000 h	2034360
					1000 h	2034359
					500 h	2034358
3412	H180	1 - 1346		50 h		2060095
					500 h	2060096
					1000 h	2060098
					2000 h	2060099

Due to possible technical changes, always refer to the information in the instruction manual.

FILTER SETS

Series code	Serial code	Series range	Cabin	First service	Replacement interval	Part no.
3412	H180	1347 - 3370		50 h		2215509
					2000 h	2215513
					500 h; 1000 h	2215512
		3371 - 9999			500 h; 1000 h	2501686
				50 h		2501685
					2000 h	2501687
	H214	1 - 9999		50 h		2186745
					2000 h	2186747
					500 h; 1000 h	2186746
3414	H180	1 - 1346			1000 h	2060098
					2000 h	2060099
					500 h	2060096
				50 h		2060095
		1347 - 3370			2000 h	2215513
					500 h; 1000 h	2215512
				50 h		2215509
		3371 - 9999		50 h		2501685
					2000 h	2501687
					500 h; 1000 h	2501686
	H214	1 - 9999		50 h		2186745
					2000 h	2186747
					500 h; 1000 h	2186746
3516	H176	1 - 1501		50 h		2043632
					500 h	2043633
					1000 h	2043635
					2000 h	2043637

Due to possible technical changes, always refer to the information in the instruction manual.

FILTER SETS						
Series code	Serial code	Series range	Cabin	First service	Replacement interval	Part no.
3516	H176	1502 - 2488		50 h		2218059
					2000 h	2218064
					500 h; 1000 h	2218061
		2489 - 9999			500 h; 1000 h	2501680
				50 h		2501679
					2000 h	2501681
	H215	1 - 9999		50 h		2203258
					2000 h	2203264
					500 h; 1000 h	2203261
3518	H176	1 - 1501		50 h		2043632
					500 h	2043633
					1000 h	2043635
					2000 h	2043637
		1502 - 2488		50 h		2218059
					2000 h	2218064
					500 h; 1000 h	2218061
		2489 - 9999			500 h; 1000 h	2501680
				50 h		2501679
					2000 h	2501681
	H215	1 - 9999			2000 h	2203264
					500 h; 1000 h	2203261
				50 h		2203258
3520	H176	1 - 1501		50 h		2043632
					500 h	2043633
					1000 h	2043635
					2000 h	2043637

Due to possible technical changes, always refer to the information in the instruction manual.

FILTER SETS

Series code	Serial code	Series range	Cabin	First service	Replacement interval	Part no.
3520	H176	1502 - 2488		50 h		2218059
					2000 h	2218064
					500 h; 1000 h	2218061
		2489 - 9999			500 h; 1000 h	2501680
				50 h		2501679
					2000 h	2501681
	H215	1 - 9999		50 h		2203258
					2000 h	2203264
					500 h; 1000 h	2203261
3625	H177	1 - 58		50 h		2043632
					500 h	2043633
					1000 h	2043635
					2000 h	2043637
		59 - 9999		50 h		2218059
					500 h; 1000 h	2218061
					2000 h	2218064
318	H239	1 - 9999		50 h		2538254
					250 h	2538255
					2000 h	2538258
					1000 h	2538257
					500 h	2538256
320	H239	1 - 9999		50 h		2538254
					250 h	2538255
					2000 h	2538258
					1000 h	2538257
					500 h	2538256

Due to possible technical changes, always refer to the information in the instruction manual.

FILTER SETS						
Series code	Serial code	Series range	Cabin	First service	Replacement interval	Part no.
322	H239	1 - 9999		50 h		2538254
					250 h	2538255
					2000 h	2538258
					1000 h	2538257
					500 h	2538256
325	H239	1 - 9999		50 h		2538254
					250 h	2538255
					2000 h	2538258
					1000 h	2538257
					500 h	2538256
HD 8	H199	1 - 220			2000 h	2151917
				50 h		2151915
					500 h; 1000 h	2151916
		221 - 2090			500 h; 1000 h	2171753
				50 h		2171751
					2000 h	2171754
		2091 - 9999			2000 h	2371682
					500 h; 1000 h	2371680
					250 h	2160199
				50 h		2371678
HD 10C	H199	1 - 220			2000 h	2151917
				50 h		2151915
					500 h; 1000 h	2151916
		221 - 2090			500 h; 1000 h	2171753
				50 h		2171751
					2000 h	2171754

Due to possible technical changes, always refer to the information in the instruction manual.

FILTER SETS						
Series code	Serial code	Series range	Cabin	First service	Replacement interval	Part no.
HD 10C	H199	2091 - 9999			2000 h	2371682
					500 h; 1000 h	2371680
					250 h	2160199
				50 h		2371678
HD 8	H263	1 - 9999			1000 h	2844269
					2000 h	2371682
					500 h	2840784
				50 h		2371678
HD 10C	H263	1 - 9999			500 h	2840784
					1000 h	2844269
					2000 h	2371682
				50 h		2371678
HD 10	H200	1 - 688			2000 h	2151921
				50 h		2151918
					500 h; 1000 h	2151919
		689 - 4322			500 h; 1000 h	2171758
				50 h		2171757
					2000 h	2171760
		4323 - 9999			2000 h	2349678
					500 h; 1000 h	2349677
				50 h		2349670
					250 h	2349675
	H230	1 - 9999		50 h		2349670
					2000 h	2349678
					500 h; 1000 h	2349677
					250 h	2349675

Due to possible technical changes, always refer to the information in the instruction manual.

FILTER SETS						
Series code	Serial code	Series range	Cabin	First service	Replacement interval	Part no.
HD 10	H262	1 - 9999			250 h	2349675
				50 h		2349670
					2000 h	2349678
					500 h; 1000 h	2349677
HD 10i	H251	1 - 9999			1000 h	2736314
				50 h		2736306
					2000 h	2736316
					500 h	2736311
HD 12	H200	1 - 688			2000 h	2151921
				50 h		2151918
					500 h; 1000 h	2151919
		689 - 4322			500 h; 1000 h	2171758
				50 h		2171757
					2000 h	2171760
		4323 - 9999			2000 h	2349678
					500 h; 1000 h	2349677
				50 h		2349670
					250 h	2349675
	H230	1 - 9999		50 h		2349670
					2000 h	2349678
					500 h; 1000 h	2349677
					250 h	2349675
	H262	1 - 9999			250 h	2349675
					2000 h	2349678
				50 h		2349670
					500 h; 1000 h	2349677

Due to possible technical changes, always refer to the information in the instruction manual.

FILTER SETS

Series code	Serial code	Series range	Cabin	First service	Replacement interval	Part no.
HD 12i	H251	1 - 9999		50 h		2736306
					500 h	2736311
					2000 h	2736316
					1000 h	2736314
HD 13	H201	170 - 3546	without operator's cabin; with operator's cabin		250 h	251496
			with operator's cabin		2000 h	2271371
			without operator's cabin		2000 h	2171509
			without operator's cabin; with operator's cabin		500 h; 1000 h	2171508
			without operator's cabin; with operator's cabin	50 h		2171507
		3547 - 9999	with operator's cabin		500 h; 1000 h	2595596
			without operator's cabin		2000 h	2595594
			without operator's cabin		500 h; 1000 h	2595592
			without operator's cabin; with operator's cabin	50 h		2595591
			with operator's cabin		2000 h	2595597
			without operator's cabin; with operator's cabin		250 h	251496
HD 13i	H231	1 - 9999	without operator's cabin; with operator's cabin	50 h		2461475
			without operator's cabin		500 h	2461477
			without operator's cabin		2000 h	2461478
			with operator's cabin		2000 h	2510674
			without operator's cabin		1000 h	2462699

Due to possible technical changes, always refer to the information in the instruction manual.

FILTER SETS						
Series code	Serial code	Series range	Cabin	First service	Replacement interval	Part no.
HD 13i	H231	1 - 9999	with operator's cabin		1000 h	2510670
			with operator's cabin		500 h	2461480
	H265	1 - 9999	with operator's cabin		500 h	2461480
			with operator's cabin		1000 h	2510670
			without operator's cabin		1000 h	2462699
			without operator's cabin; with operator's cabin	50 h		2461475
			with operator's cabin		2000 h	2510674
			without operator's cabin		500 h	2461477
			without operator's cabin		2000 h	2461478
	H285	1 - 9999	with operator's cabin		500 h	2896808
			with operator's cabin		1000 h	2896812
			without operator's cabin		1000 h	2896811
			without operator's cabin; with operator's cabin	50 h		2891054
			without operator's cabin		2000 h	2896813
			without operator's cabin		500 h	2896807
			with operator's cabin		2000 h	2896814
HD 14	H201	170 - 3546	without operator's cabin; with operator's cabin		250 h	251496
			with operator's cabin		2000 h	2271371
			without operator's cabin		2000 h	2171509
			without operator's cabin; with operator's cabin		500 h; 1000 h	2171508
			without operator's cabin; with operator's cabin	50 h		2171507

Due to possible technical changes, always refer to the information in the instruction manual.

FILTER SETS

Series code	Serial code	Series range	Cabin	First service	Replacement interval	Part no.
HD 14	H201	3547 - 9999	with operator's cabin		500 h; 1000 h	2595596
			without operator's cabin		2000 h	2595594
			without operator's cabin		500 h; 1000 h	2595592
			without operator's cabin; with operator's cabin	50 h		2595591
			with operator's cabin		2000 h	2595597
			without operator's cabin; with operator's cabin		250 h	251496
HD 14i	H231	1 - 9999	without operator's cabin		2000 h	2461478
			with operator's cabin		500 h	2461480
			without operator's cabin		1000 h	2462699
			without operator's cabin		500 h	2461477
			with operator's cabin		2000 h	2510674
			without operator's cabin; with operator's cabin	50 h		2461475
			with operator's cabin		1000 h	2510670
	H265	1 - 9999	with operator's cabin		500 h	2461480
			with operator's cabin		1000 h	2510670
			without operator's cabin		1000 h	2462699
			without operator's cabin; with operator's cabin	50 h		2461475
			without operator's cabin		2000 h	2461478
			without operator's cabin		500 h	2461477
			with operator's cabin		2000 h	2510674
	H285	1 - 9999	with operator's cabin		500 h	2896808
			with operator's cabin		1000 h	2896812

Due to possible technical changes, always refer to the information in the instruction manual.

FILTER SETS						
Series code	Serial code	Series range	Cabin	First service	Replacement interval	Part no.
HD 14i	H285	1 - 9999	without operator's cabin		1000 h	2896811
			without operator's cabin; with operator's cabin	50 h		2891054
			without operator's cabin		2000 h	2896813
			without operator's cabin		500 h	2896807
			with operator's cabin		2000 h	2896814
HD 14 TT	H208	1 - 157	without operator's cabin; with operator's cabin	50 h		2171507
			without operator's cabin		500 h; 1000 h	2171508
			without operator's cabin		2000 h	2171509
			with operator's cabin		500 h; 1000 h	2271706
			with operator's cabin		2000 h	2271707
			without operator's cabin; with operator's cabin		250 h	251496
		158 - 9999	without operator's cabin; with operator's cabin		250 h	251496
			without operator's cabin; with operator's cabin	50 h		2595591
			without operator's cabin		500 h; 1000 h	2595592
			without operator's cabin		2000 h	2595594
			with operator's cabin		500 h; 1000 h	2595596
			with operator's cabin		2000 h	2595597
HD+ 70i	H186	1 - 9999			2000 h	2318283
					500 h; 1000 h	2318278
	H272	1 - 9999			500 h; 1000 h	2871165
					2000 h	2871166

Due to possible technical changes, always refer to the information in the instruction manual.

FILTER SETS

Series code	Serial code	Series range	Cabin	First service	Replacement interval	Part no.
HD+ 70i	H272	1 - 9999		50 h		2871159
HD+ 80i	H186	1 - 9999			2000 h	2318283
					500 h; 1000 h	2318278
	H272	1 - 9999		50 h		2871159
					500 h; 1000 h	2871165
					2000 h	2871166
HD+ 90	H185	1 - 9999			2000 h	2140976
					500 h; 1000 h	2140973
HD+ 90i	H209	1 - 9999			2000 h	2277491
					500 h; 1000 h	2277490
HD+ 90	H258	1 - 228			500 h; 1000 h	2642114
					2000 h	2642115
		1 - 575		50 h		2642108
		229 - 575			500 h; 1000 h	2972776
					2000 h	2972778
		576 - 9999			500 h; 1000 h	WX3341671
					2000 h	WX3341673
				50 h		WX3341670
HD+ 90i	H242	1 - 9999			2000 h	2506296
					500 h	2506291
HD+ 110	H185	1 - 9999			2000 h	2140976
					500 h; 1000 h	2140973
	H258	1 - 228			500 h; 1000 h	2642114
					2000 h	2642115
		1 - 575		50 h		2642108
		229 - 575			2000 h	2972778

Due to possible technical changes, always refer to the information in the instruction manual.

FILTER SETS						
Series code	Serial code	Series range	Cabin	First service	Replacement interval	Part no.
HD+ 110	H258	229 - 575			500 h; 1000 h	2972776
		576 - 9999		50 h		WX3341670
					500 h; 1000 h	WX3341671
					2000 h	WX3341673
HD+ 110i	H209	1 - 9999			2000 h	2277491
					500 h; 1000 h	2277490
	H242	1 - 9999			2000 h	2506296
					500 h	2506291
HD+ 120	H184	1 - 53			500 h; 1000 h	2057901
					2000 h	2057903
		54 - 9999			500 h; 1000 h	2057901
					2000 h	2140976
	H259	1 - 224			500 h; 1000 h	2638945
					2000 h	2638946
		1 - 484		250 h		2638943
		225 - 484			500 h; 1000 h	2972781
					2000 h	2972783
		485 - 9999		50 h		WX3348913
					500 h; 1000 h	WX3348915
					2000 h	WX3348917
HD+ 120i	H207	1 - 9999			500 h; 1000 h	2308636
				50 h		2308768
					2000 h	2308637
	H243	1 - 9999			2000 h	2543620
					500 h; 1000 h	2543617
	H274	11 - 9999			500 h; 1000 h	2955610

Due to possible technical changes, always refer to the information in the instruction manual.

FILTER SETS

Series code	Serial code	Series range	Cabin	First service	Replacement interval	Part no.
HD+ 120i	H274	11 - 9999		50 h		2647040
					2000 h	2955612
HD+ 140	H184	1 - 53			500 h; 1000 h	2057901
					2000 h	2057903
		54 - 9999			500 h; 1000 h	2057901
					2000 h	2140976
	H259	1 - 224			500 h; 1000 h	2638945
					2000 h	2638946
		1 - 484		250 h		2638943
		225 - 484			500 h; 1000 h	2972781
					2000 h	2972783
		485 - 9999		50 h		WX3348913
					500 h; 1000 h	WX3348915
					2000 h	WX3348917
HD+ 140i	H207	1 - 9999		50 h		2308768
					2000 h	2308637
					500 h; 1000 h	2308636
	H243	1 - 9999			2000 h	2543620
					500 h; 1000 h	2543617
	H274	11 - 9999			2000 h	2955612
					500 h; 1000 h	2955610
				50 h		2647040
HD 70	H187	1 - 613			2000 h	2058013
				50 h		2058010
					500 h	2058011
					1000 h	2058012

Due to possible technical changes, always refer to the information in the instruction manual.

FILTER SETS						
Series code	Serial code	Series range	Cabin	First service	Replacement interval	Part no.
HD 70	H187	614 - 1502			1000 h	2249215
					500 h	2249212
				50 h		2249211
					2000 h	2249216
		1502 - 9999			2000 h	2561805
					1000 h	2561804
				50 h		2561798
					500 h	2561803
HD 75	H187	1 - 613			1000 h	2058012
					2000 h	2058013
					500 h	2058011
				50 h		2058010
		614 - 1502		50 h		2249211
					2000 h	2249216
					1000 h	2249215
					500 h	2249212
		1502 - 9999			1000 h	2561804
					2000 h	2561805
				50 h		2561798
					500 h	2561803
HD 90	H174	1 - 9999		50 h		2020489
					2000 h	2020499
					1000 h	2020496
					500 h	2020492
	H181	1 - 1346		50 h		2060101
					500 h	2060103

Due to possible technical changes, always refer to the information in the instruction manual.

FILTER SETS

Series code	Serial code	Series range	Cabin	First service	Replacement interval	Part no.
HD 90	H181	1 - 1346			1000 h	2060104
					2000 h	2060105
		1347 - 9999		50 h		2561732
					500 h	2561734
					1000 h	2561735
					2000 h	2561737
HD 110	H174	1 - 9999		50 h		2020489
					2000 h	2020499
					1000 h	2020496
					500 h	2020492
	H181	1 - 1346		50 h		2060101
					500 h	2060103
					1000 h	2060104
					2000 h	2060105
		1347 - 9999		50 h		2561732
					500 h	2561734
					1000 h	2561735
					2000 h	2561737
HD 120	H275	1 - 9999		50 h		2020489
					2000 h	2020499
					1000 h	2020496
					500 h	2020492
	H182	1 - 9999		50 h		2060107
					2000 h	2060112
					1000 h	2060111
					500 h	2060110

Due to possible technical changes, always refer to the information in the instruction manual.

FILTER SETS						
Series code	Serial code	Series range	Cabin	First service	Replacement interval	Part no.
HD 130	H275	1 - 9999		50 h		2020489
					2000 h	2020499
					1000 h	2020496
					500 h	2020492
	H182	1 - 9999		50 h		2060107
					2000 h	2060112
					1000 h	2060111
					500 h	2060110
DV 65	H197	1 - 9999		50 h		2050500
					2000 h	2050555
					1000 h	2050503
					500 h	2050501
DV 70	H191	1 - 9999		50 h		2050500
					2000 h	2050555
					1000 h	2050503
					500 h	2050501
DV 85	H198	1 - 9999		50 h		2051236
					2000 h	2051250
					1000 h	2051248
					500 h	2051237
DV 90	H192	1 - 9999		50 h		2051236
					2000 h	2051250
					1000 h	2051248
					500 h	2051237
DV+ 70i	H225	1 - 92			500 h	2441901
					1000 h	2441903

Due to possible technical changes, always refer to the information in the instruction manual.

FILTER SETS

Series code	Serial code	Series range	Cabin	First service	Replacement interval	Part no.
DV+ 70i	H225	1 - 92			2000 h	2441906
		93 - 320			500 h	2441901
					1000 h	2541207
					2000 h	2541208
		321 - 9999			2000 h	2679298
					1000 h	2679297
					500 h	2441901
					500 h	2621775
	H277	1 - 9999		50 h		2777933
					2000 h	2777942
					1000 h	2777941
					500 h	2777940
DV+ 90i	H226	1 - 9999			2000 h	2443484
					500 h; 1000 h	2443482
	H246	1 - 9999			2000 h	2577359
					500 h; 1000 h	2577355
	H278	1 - 9999		50 h		2700652
					500 h; 1000 h	2861487
					2000 h	2861488
HD 150 TT	H183	1 - 9999		50 h		2060113
					2000 h	2060116
					1000 h	2060115
					500 h	2060114
	H193	1 - 9999		50 h		2048055
					2000 h	2048128
					1000 h	2048110

Due to possible technical changes, always refer to the information in the instruction manual.

FILTER SETS						
Series code	Serial code	Series range	Cabin	First service	Replacement interval	Part no.
HD 150 TT	H193	1 - 9999			500 h	2048063
HW 90	H123	522 - 541			2000 h	2013749
					1000 h	2013756
					500 h	2013780
		542 - 861			500 h	2013830
					1000 h	2013829
					2000 h	2013817
				50 h		2013815
		862 - 989			2000 h	2029775
					1000 h	2029756
					500 h	2029736
				50 h		2029734
		990 - 1023		50 h		2052612
					2000 h	2052618
					1000 h	2052615
					500 h	2052614
		1024 - 1110			2000 h	2058254
					1000 h	2058253
					500 h	2058252
				50 h		2058251
		1111 - 9999		50 h		2370197
					500 h	2370199
					1000 h	2370201
					2000 h	2370202
HP 280	H249	1 - 156			500 h; 1000 h	2647044
				50 h		2647040

Due to possible technical changes, always refer to the information in the instruction manual.

FILTER SETS

Series code	Serial code	Series range	Cabin	First service	Replacement interval	Part no.
HP 280	H249	1 - 156			2000 h	2647045
		157 - 659		50 h		2647040
					500 h; 1000 h	2958995
					2000 h	2958996
		660 - 9999			500 h; 1000 h	WX3323747
					2000 h	WX3323748
				50 h		WX3323745
HP 240	H283	1 - 27			500 h; 1000 h	2647044
					2000 h	2647045
		1 - 594		50 h		2647040
		28 - 594			2000 h	2958996
					500 h; 1000 h	2958995
		595 - 9999			2000 h	WX3323762
					500 h; 1000 h	WX3323761
				50 h		WX3323760
HP 280i	H271	1 - 9999		150 h		2662356
					2000 h	2662358
					500 h; 1000 h	2662357
HP 240i	H282	1 - 257			500 h; 1000 h	2662357
				50 h		2662356
					2000 h	2662358
		258 - 9999		50 h		WX3323756
					2000 h	WX3323758
					500 h; 1000 h	WX3323757
GRW 280i	H212	1 - 9999			2000 h	2283770
					500 h; 1000 h	2283765

Due to possible technical changes, always refer to the information in the instruction manual.

FILTER SETS						
Series code	Serial code	Series range	Cabin	First service	Replacement interval	Part no.
GRW 280i	H244	1 - 9999			500 h; 1000 h	2618572
				50 h		2622228
					2000 h	2619004
GRW 180i	H228	1 - 9999			500 h; 1000 h	2457218
					2000 h	2457222
GRW 280	H195, H229	1 - 9999			2000 h	2160577
					500 h; 1000 h	2160576
GRW 10	H178	1 - 9999		50 h		2060117
					2000 h	2060121
					1000 h	2060120
					500 h	2060119
	H190	1 - 1974		50 h		2047980
					500 h	2047998
					1000 h	2048005
					2000 h	2048025
		1975 - 9999		50 h		2449647
					500 h	2450196
					1000 h	2450200
					2000 h	2450209
GRW 15	H178	1 - 9999		50 h		2060117
					2000 h	2060121
					1000 h	2060120
					500 h	2060119
	H190	1 - 1974		50 h		2047980
					500 h	2047998
					1000 h	2048005

Due to possible technical changes, always refer to the information in the instruction manual.

FILTER SETS

Series code	Serial code	Series range	Cabin	First service	Replacement interval	Part no.
GRW 15	H190	1 - 1974			2000 h	2048025
		1975 - 9999		50 h		2449647
					500 h	2450196
					1000 h	2450200
					2000 h	2450209
GRW 18	H178	1 - 9999		50 h		2060117
					2000 h	2060121
					1000 h	2060120
					500 h	2060119
	H190	1 - 1974		50 h		2047980
					500 h	2047998
					1000 h	2048005
					2000 h	2048025
		1975 - 9999		50 h		2449647
					500 h	2450196
					1000 h	2450200
					2000 h	2450209
GRW 21	H190	1 - 1974		50 h		2047980
					500 h	2047998
					1000 h	2048005
					2000 h	2048025
		1975 - 9999		50 h		2449647
					500 h	2450196
					1000 h	2450200
					2000 h	2450209
GRW 24	H190	1 - 1974		50 h		2047980

Due to possible technical changes, always refer to the information in the instruction manual.

FILTER SETS						
Series code	Serial code	Series range	Cabin	First service	Replacement interval	Part no.
GRW 24	H190	1 - 1974			500 h	2047998
					1000 h	2048005
					2000 h	2048025
		1975 - 9999		50 h		2449647
					500 h	2450196
					1000 h	2450200
					2000 h	2450209
HP 180i	H250	1 - 9999		50 h		2647040
					500 h; 1000 h	2830866
					2000 h	2830874
		356 - 9999		50 h		WX3323752
					500 h; 1000 h	WX3323754
					2000 h	WX3323755
HC 100i	H252	1 - 1906		50 h		3086719
					500 h; 1000 h	3086720
			without air-conditioning system		2000 h	3086721
			with air-conditioning system		2000 h	3086723
		1907 - 9999		50 h		WX3341580
					500 h; 1000 h	WX3341582
			without air-conditioning system		2000 h	WX3341584
			with air-conditioning system		2000 h	WX3341586
HC 110i	H252	1 - 1906		50 h		3086719
					500 h; 1000 h	3086720
			without air-conditioning system		2000 h	3086721
			with air-conditioning system		2000 h	3086723
		1907 - 9999		50 h		WX3341580

Due to possible technical changes, always refer to the information in the instruction manual.

FILTER SETS

Series code	Serial code	Series range	Cabin	First service	Replacement interval	Part no.
HC 110i	H252	1907 - 9999			500 h; 1000 h	WX3341582
			without air-conditioning system		2000 h	WX3341584
			with air-conditioning system		2000 h	WX3341586
HC 120i	H252	1 - 1906		50 h		3086719
					500 h; 1000 h	3086720
			without air-conditioning system		2000 h	3086721
			with air-conditioning system		2000 h	3086723
		1907 - 9999		50 h		WX3341580
					500 h; 1000 h	WX3341582
			without air-conditioning system		2000 h	WX3341584
			with air-conditioning system		2000 h	WX3341586
HC 130i	H254	1 - 897		50 h		3086729
					500 h; 1000 h	3086732
			without air-conditioning system		2000 h	3086733
			with air-conditioning system		2000 h	3086734
		898 - 9999		50 h		WX3341502
					500 h; 1000 h	WX3341503
			without air-conditioning system		2000 h	WX3341506
			with air-conditioning system		2000 h	WX3341507
HC 140i	H254	1 - 897		50 h		3086729
					500 h; 1000 h	3086732
			without air-conditioning system		2000 h	3086733
			with air-conditioning system		2000 h	3086734
		898 - 9999		50 h		WX3341502
					500 h; 1000 h	WX3341503
			without air-conditioning system		2000 h	WX3341506

Due to possible technical changes, always refer to the information in the instruction manual.

FILTER SETS						
Series code	Serial code	Series range	Cabin	First service	Replacement interval	Part no.
HC 140i	H254	898 - 9999	with air-conditioning system		2000 h	WX3341507
HC 160i	H254	1 - 897		50 h		3086729
					500 h; 1000 h	3086732
			without air-conditioning system		2000 h	3086733
			with air-conditioning system		2000 h	3086734
		898 - 9999		50 h		WX3341502
					500 h; 1000 h	WX3341503
			without air-conditioning system		2000 h	WX3341506
			with air-conditioning system		2000 h	WX3341507
HC 130	H255	1 - 9999	without air-conditioning system		2000 h	3086740
				50 h		3086735
					500 h; 1000 h	3086738
			with air-conditioning system		2000 h	3086741
HD+ 110i	H273	1 - 9999			500 h; 1000 h	2970660
				50 h		2912631
					2000 h	2970662
HD+ 90i	H273	1 - 9999			500 h; 1000 h	2970660
				50 h		2912631
					2000 h	2970662
HC 50i	H287	1 - 650			2000 h	3123680
					500 h	3123679
				50 h		3123678
		1 - 650			1000 h	WX3259696
		651 - 9999		50 h		WX3341655
					500 h	WX3341657
					1000 h	WX3341659

Due to possible technical changes, always refer to the information in the instruction manual.

FILTER SETS

Series code	Serial code	Series range	Cabin	First service	Replacement interval	Part no.
HC 50i	H287	651 - 9999			2000 h	WX3341662
HC 70i	H287	1 - 650			2000 h	3123680
					500 h	3123679
				50 h		3123678
		1 - 650			1000 h	WX3259696
		651 - 9999		50 h		WX3341655
					500 h	WX3341657
					1000 h	WX3341659
					2000 h	WX3341662
HX 70i	H297	1 - 236		50 h		2777933
					500 h	2777940
					1000 h	2777941
					2000 h	2777942
		237 - 9999		50 h		WX3323763
					500 h	WX3324870
					1000 h	WX3323772
					2000 h	WX3324871
HX 90i	H299	1 - 281			2000 h	2861488
					500 h; 1000 h	2861487
				50 h		2700652
		282 - 9999			2000 h	WX3324874
					500 h; 1000 h	WX3324872
				50 h		WX3323767
HD+ 70i	H302	1 - 201			2000 h	2871166
					500 h; 1000 h	2871165
				50 h		2871159

Due to possible technical changes, always refer to the information in the instruction manual.

FILTER SETS						
Series code	Serial code	Series range	Cabin	First service	Replacement interval	Part no.
HD+ 70i	H302	202 - 9999			2000 h	WX3348940
					500 h; 1000 h	WX3348938
				50 h		WX3348935
HD+ 80i	H302	1 - 201			2000 h	2871166
					500 h; 1000 h	2871165
				50 h		2871159
		202 - 9999			2000 h	WX3348940
					500 h; 1000 h	WX3348938
				50 h		WX3348935
HD+ 110i	H303	1 - 271			2000 h	2970662
					500 h; 1000 h	2970660
				50 h		2912631
		272 - 9999			2000 h	WX3349026
					500 h; 1000 h	WX3349024
				50 h		WX3349022
HD+ 90i	H303	1 - 271			500 h; 1000 h	2970660
				50 h		2912631
					2000 h	2970662
		272 - 9999		50 h		WX3349022
					500 h; 1000 h	WX3349024
					2000 h	WX3349026
HD+ 120i	H304	1 - 393			2000 h	2955612
					500 h; 1000 h	2955610
				50 h		2647040
		394 - 9999			2000 h	WX3349031
					500 h; 1000 h	WX3349030

Due to possible technical changes, always refer to the information in the instruction manual.

FILTER SETS

Series code	Serial code	Series range	Cabin	First service	Replacement interval	Part no.
HD+ 120i	H304	394 - 9999		50 h		WX3349029
HD+ 140i	H304	1 - 393			2000 h	2955612
					500 h; 1000 h	2955610
				50 h		2647040
		394 - 9999			2000 h	WX3349031
					500 h; 1000 h	WX3349030
				50 h		WX3349029
HP 100i	H300	1 - 136		50 h		3063078
					500 h; 1000 h	3063080
					2000 h	3063083
		137 - 9999		50 h		WX3348806
					500 h; 1000 h	WX3348807
					2000 h	WX3348808
HC 180	H257	1 - 368			2000 h	3023685
					500 h; 1000 h	3023683
				50 h		WX3004452
		369 - 9999			2000 h	WX3341628
					500 h; 1000 h	WX3341626
				50 h		WX3341619
HC 200	H257	1 - 368			500 h; 1000 h	3023683
				50 h		WX3004452
					2000 h	3023685
		369 - 9999		50 h		WX3341619
					500 h; 1000 h	WX3341626
					2000 h	WX3341628
HC 250	H257	1 - 368		50 h		WX3004452

Due to possible technical changes, always refer to the information in the instruction manual.

FILTER SETS						
Series code	Serial code	Series range	Cabin	First service	Replacement interval	Part no.
HC 250	H257	1 - 368			500 h; 1000 h	3023683
					2000 h	3023685
		369 - 9999			2000 h	WX3341628
				50 h		WX3341619
					500 h; 1000 h	WX3341626
HC 250 VC	H257	1 - 368			2000 h	3023685
				50 h		WX3004452
					500 h; 1000 h	3023683
		369 - 9999			2000 h	WX3341628
					500 h; 1000 h	WX3341626
				50 h		WX3341619
HD+ 70	H301	1 - 64			2000 h	2871166
				50 h		2871159
					500 h; 1000 h	2871165
		65 - 9999			2000 h	WX3348940
					500 h; 1000 h	WX3348938
				50 h		WX3348935
HD+ 80	H301	1 - 64		50 h		2871159
					500 h; 1000 h	2871165
					2000 h	2871166
		65 - 9999			500 h; 1000 h	WX3348938
		1907 - 9999			500 h; 1000 h	WX3341589
HD+ 80	H301	65 - 9999		50 h		WX3348935
		1907 - 9999	without air-conditioning system		2000 h	WX3341590
HD+ 80	H301	65 - 9999			2000 h	WX3348940
		1907 - 9999	with air-conditioning system		2000 h	WX3341593

Due to possible technical changes, always refer to the information in the instruction manual.

FILTER SETS

Series code	Serial code	Series range	Cabin	First service	Replacement interval	Part no.
HC 50i	H288	1 - 1516			500 h; 1000 h	3123000
					2000 h	3123003
				50 h		3122997
		1517 - 9999			500 h; 1000 h	WX3341543
					2000 h	WX3341545
				50 h		WX3341541
HC 70i	H288	1 - 1516		50 h		3122997
					2000 h	3123003
					500 h; 1000 h	3123000
		1517 - 9999			500 h; 1000 h	WX3341543
					2000 h	WX3341545
				50 h		WX3341541
HD 10e	H289	1 - 9999		50 h		2322784
					500 h; 1000 h	3068221
					2000 h	3068222
HD 12e	H289	1 - 9999		50 h		2322784
					500 h; 1000 h	3068221
					2000 h	3068222
HP 180	H248	1 - 65			500 h; 1000 h	2647044
					2000 h	2647045
		1 - 328		50 h		2647040
		66 - 328			2000 h	2958996
					500 h; 1000 h	2958995
		329 - 9999		50 h		WX3323740
		375 - 9999			500 h; 1000 h	WX3341611
HP 180	H248	329 - 9999			500 h; 1000 h	WX3323743

Due to possible technical changes, always refer to the information in the instruction manual.

FILTER SETS						
Series code	Serial code	Series range	Cabin	First service	Replacement interval	Part no.
HP 180	H248	329 - 9999			2000 h	WX3323744
HD+ 70i	H335	12 - 9999			500 h; 1000 h	WX3348938
		375 - 9999			2000 h	WX3341615
HD+ 70i	H335	12 - 9999		50 h		WX3348935
		375 - 9999			500 h; 1000 h	WX3341611
HD+ 70i	H335	12 - 9999			2000 h	WX3348940
HD+ 80i	H335	12 - 9999		50 h		WX3348935
		375 - 9999			2000 h	WX3341615
HD+ 80i	H335	12 - 9999			2000 h	WX3348940
		375 - 9999			500 h; 1000 h	WX3341611
HD+ 80i	H335	12 - 9999			500 h; 1000 h	WX3348938
		375 - 9999			2000 h	WX3341615
HP 180i	H334	1 - 8			500 h; 1000 h	2830866
					2000 h	2830874
				50 h		2647040
		9 - 9999		50 h		WX3323752
					2000 h	WX3323755
					500 h; 1000 h	WX3323754
HC 50i	H337	1 - 9999			500 h	WX3341657
				50 h		WX3341655
					1000 h	WX3341659
					2000 h	WX3341662
HC 70i	H337	1 - 9999			2000 h	WX3341662
					1000 h	WX3341659
					500 h	WX3341657
				50 h		WX3341655

Due to possible technical changes, always refer to the information in the instruction manual.

FILTER SETS

Series code	Serial code	Series range	Cabin	First service	Replacement interval	Part no.
HD 10 G	H309	1 - 9999		50 h		WX3244402
					2000 h	WX3244407
					500 h; 1000 h	WX3244404
HD 12 G	H309	1 - 9999			2000 h	WX3244407
					500 h; 1000 h	WX3244404
				50 h		WX3244402
HC 100i G	H310	1 - 9999		50 h		WX3295182
					500 h; 1000 h	WX3295186
HC 130i G	H310	1 - 9999	with air-conditioning system		2000 h	WX3295190
HC 110i G	H310	1 - 9999	without air-conditioning system		2000 h	WX3295189
HC 110	H311	1 - 89			500 h; 1000 h	3086726
			with air-conditioning system		2000 h	WX3291779
			without air-conditioning system		2000 h	WX3291771
		90 - 9999		50 h		WX3341512
			with air-conditioning system		2000 h	WX3341517
					500 h; 1000 h	WX3341513
			without air-conditioning system		2000 h	WX3341516
HC 110 C	H311	1 - 89	with air-conditioning system		2000 h	WX3291775
					500 h; 1000 h	WX3228181
			without air-conditioning system		2000 h	WX3291772
		90 - 9999			500 h; 1000 h	WX3341528
			without air-conditioning system		2000 h	WX3341530
			with air-conditioning system		2000 h	WX3341533
HC 130	H313	6 - 9999	with air-conditioning system		2000 h	WX3341646
					500 h; 1000 h	WX3341639
			without air-conditioning system		2000 h	WX3341643

Due to possible technical changes, always refer to the information in the instruction manual.

FILTER SETS						
Series code	Serial code	Series range	Cabin	First service	Replacement interval	Part no.
HC 130	H313	6 - 9999		50 h		WX3341637
HC 130 C	H313	6 - 9999			500 h; 1000 h	WX3341647
			without air-conditioning system		2000 h	WX3341648
			with air-conditioning system		2000 h	WX3341650
HC 160	H313	6 - 9999		50 h		WX3341637
			with air-conditioning system		2000 h	WX3341646
					500 h; 1000 h	WX3341639
			without air-conditioning system		2000 h	WX3341643
HC 160 C	H313	6 - 9999	without air-conditioning system		2000 h	WX3341648
			with air-conditioning system		2000 h	WX3341650
					500 h; 1000 h	WX3341647
HC 110	H253	1 - 9999	with air-conditioning system		2000 h	3086728
					500 h; 1000 h	3086726
			without air-conditioning system		2000 h	3086727
				50 h		3086725
HC 110 C	H253	1 - 9999	with air-conditioning system		2000 h	WX3228182
					500 h; 1000 h	WX3228181
			without air-conditioning system		2000 h	WX3228183
HC 160i C	H254	898 - 9999	with air-conditioning system		2000 h	WX3341511
			without air-conditioning system		2000 h	WX3341509
					500 h; 1000 h	WX3341508
HC 130i C	H254	898 - 9999	without air-conditioning system		2000 h	WX3341509
					500 h; 1000 h	WX3341508
			with air-conditioning system		2000 h	WX3341511
HC 140i C	H254	898 - 9999	without air-conditioning system		2000 h	WX3341509
					500 h; 1000 h	WX3341508

Due to possible technical changes, always refer to the information in the instruction manual.

FILTER SETS						
Series code	Serial code	Series range	Cabin	First service	Replacement interval	Part no.
HC 140i C	H254	898 - 9999	with air-conditioning system		2000 h	WX3341511
HC 100i C	H252	1907 - 9999	with air-conditioning system		2000 h	WX3341593
					500 h; 1000 h	WX3341589
			without air-condition-ing system		2000 h	WX3341590
HC 120i C	H252	1907 - 9999	without air-condition-ing system		2000 h	WX3341590
			with air-conditioning system		2000 h	WX3341593
					500 h; 1000 h	WX3341589
HC 250 C VC	H257	369 - 9999			2000 h	WX3341633
					500 h; 1000 h	WX3341631
HC 250 C	H257	369 - 9999			500 h; 1000 h	WX3341631
					2000 h	WX3341633
HC 200 C	H257	369 - 9999			500 h; 1000 h	WX3341631
					2000 h	WX3341633
HC 180 C	H257	369 - 9999			2000 h	WX3341633
					500 h; 1000 h	WX3341631

Original HAMM

MAINTENANCE PARTS

MAINTENANCE PACKAGES

Genuine WIRTGEN GROUP maintenance packages are our comprehensive all-round package and contain all the air, fuel, engine oil and hydraulic filters as well as lubricants, oils and seals required for the machine's first service or the specified replacement interval, depending on the machine type. In order to ensure that the machine performs at its best, we recommend that you adhere to the specified replacement intervals.

MAINTENANCE PACKAGES

Series code	Serial code	Series range	Version	Cabin	First service	Replacement interval	Part no.
H 5i	H222	1 - 9999				1000 h	2504371
						500 h	2504367
					50 h		2504364
						2000 h	2504375
	H270	1 - 718				1000 h	2504371
						500 h	2504367
					50 h		2504364
						2000 h	2504375
		719 - 9999				1000 h	3035097
						500 h	3035096
						2000 h	3035098
					50 h		3035094
H 7i	H222	1 - 9999			50 h		2504364
						2000 h	2504375
						1000 h	2504371
						500 h	2504367
	H270	1 - 718				1000 h	2504371
						500 h	2504367
					50 h		2504364
						2000 h	2504375

Due to possible technical changes, always refer to the information in the instruction manual.

MAINTENANCE PACKAGES

Series code	Serial code	Series range	Version	Cabin	First service	Replacement interval	Part no.
H 7i	H270	719 - 9999				1000 h	3035097
						2000 h	3035098
						500 h	3035096
					50 h		3035094
H 10i	H235	1 - 2314				2000 h	2591872
						1000 h	2591871
						500 h	2591870
					50 h		2591869
		2315 - 9999				2000 h	3035105
					50 h		3035100
						500 h	3035103
						1000 h	3035104
	H266	1 - 9999				500 h	3035103
					50 h		3035100
						2000 h	3035105
						1000 h	3035104
	H284	1 - 9999				500 h	3035103
					50 h		3035100
						1000 h	3035104
						2000 h	3035105
H 11i	H211	1 - 9999			50 h		2410440
						2000 h	2410443
						1000 h	2410442
						500 h	2410441
	H235	1 - 2314				1000 h	2591871
					50 h		2591869

Due to possible technical changes, always refer to the information in the instruction manual.

MAINTENANCE PARTS

MAINTENANCE PACKAGES							
Series code	Serial code	Series range	Version	Cabin	First service	Replacement interval	Part no.
H 11i	H235	1 - 2314				500 h	2591870
						2000 h	2591872
		2315 - 9999			50 h		3035100
						2000 h	3035105
						1000 h	3035104
						500 h	3035103
	H266	1 - 9999				2000 h	3035105
						500 h	3035103
						1000 h	3035104
					50 h		3035100
	H284	1 - 9999				500 h	3035103
						2000 h	3035105
					50 h		3035100
						1000 h	3035104
H 11ix	H210	1 - 9999			50 h		2410453
						2000 h	2410459
						1000 h	2410457
						500 h	2410455
H 12i	H235	1 - 2314				1000 h	2591871
						500 h	2591870
					50 h		2591869
						2000 h	2591872
		2315 - 9999				2000 h	3035105
						500 h	3035103
						1000 h	3035104
					50 h		3035100

Due to possible technical changes, always refer to the information in the instruction manual.

MAINTENANCE PACKAGES

Series code	Serial code	Series range	Version	Cabin	First service	Replacement interval	Part no.
H 12i	H266	1 - 9999				1000 h	3035104
					50 h		3035100
						2000 h	3035105
						500 h	3035103
	H284	1 - 9999				2000 h	3035105
						1000 h	3035104
					50 h		3035100
						500 h	3035103
H 13i	H211	1 - 9999			50 h		2410440
						2000 h	2410443
						1000 h	2410442
						500 h	2410441
	H234	1 - 9999			50 h		2591869
						2000 h	2591878
						1000 h	2591875
						500 h	2591873
	H267	1 - 83				500 h	2591873
						1000 h	2591875
					50 h		2591869
						2000 h	2591878
		84 - 9999				2000 h	3035111
					50 h		3035106
						500 h	3035108
						1000 h	3035109
H 13ix	H210	1 - 9999			50 h		2410453
						2000 h	2410459

Due to possible technical changes, always refer to the information in the instruction manual.

MAINTENANCE PARTS

MAINTENANCE PACKAGES							
Series code	Serial code	Series range	Version	Cabin	First service	Replacement interval	Part no.
H 13ix	H210	1 - 9999				1000 h	2410457
						500 h	2410455
H 14i	H234	1 - 9999			50 h		2591869
						2000 h	2591878
						1000 h	2591875
						500 h	2591873
	H267	1 - 83				500 h	2591873
						2000 h	2591878
					50 h		2591869
						1000 h	2591875
		84 - 9999			50 h		3035106
						2000 h	3035111
						500 h	3035108
						1000 h	3035109
H 16i	H211	1 - 9999			50 h		2410440
						2000 h	2410443
						1000 h	2410442
						500 h	2410441
	H234	1 - 9999			50 h		2591869
						2000 h	2591881
						1000 h	2591875
						500 h	2591873
	H267	1 - 83				500 h	2591873
						1000 h	2591875
					50 h		2591869
						2000 h	2591881

Due to possible technical changes, always refer to the information in the instruction manual.

MAINTENANCE PACKAGES

Series code	Serial code	Series range	Version	Cabin	First service	Replacement interval	Part no.
H 16i	H267	84 - 9999				1000 h	3035109
						2000 h	3035111
						500 h	3035108
					50 h		3035106
H 18i	H202	1 - 9999				500 h	2410447
						2000 h	2410451
						1000 h	2410449
	H233	1 - 9999			50 h		2713092
						500 h	2591891
						1000 h	2591893
						2000 h	2591895
	H268	1 - 192				2000 h	2591895
						1000 h	2591893
						500 h	2591891
					150 h		2713092
		193 - 9999				500 h	3035118
					50 h		3035114
						1000 h	3035120
						2000 h	3035121
H 20i	H202	1 - 9999				500 h	2410447
						2000 h	2410451
						1000 h	2410449
	H233	1 - 9999				500 h	2591891
					50 h		2713092
						2000 h	2591895
						1000 h	2591893

Due to possible technical changes, always refer to the information in the instruction manual.

MAINTENANCE PARTS

MAINTENANCE PACKAGES							
Series code	Serial code	Series range	Version	Cabin	First service	Replacement interval	Part no.
H 20i	H268	1 - 192				2000 h	2591895
						1000 h	2591893
						500 h	2591891
					150 h		2713092
		193 - 9999				1000 h	3035120
						500 h	3035118
					50 h		3035114
						2000 h	3035121
H 25i	H202	1 - 9999				500 h	2410447
						2000 h	2410451
						1000 h	2410449
	H233	1 - 9999				500 h	2591891
					50 h		2713092
						2000 h	2591895
						1000 h	2591893
	H268	1 - 192				2000 h	2591895
						1000 h	2591893
						500 h	2591891
					150 h		2713092
		193 - 9999				1000 h	3035120
					50 h		3035114
						2000 h	3035121
						500 h	3035118
HC 180i	H256	1 - 374				500 h	3035124
					50 h		3035123
						2000 h	3035128

Due to possible technical changes, always refer to the information in the instruction manual.

MAINTENANCE PACKAGES

Series code	Serial code	Series range	Version	Cabin	First service	Replacement interval	Part no.
HC 180i	H256	1 - 374				1000 h	3035126
		375 - 9999				2000 h	WX3353318
						1000 h	WX3353315
						500 h	WX3353314
					50 h		WX3353313
HC 200i	H256	1 - 374				1000 h	3035126
						2000 h	3035128
					50 h		3035123
						500 h	3035124
		375 - 9999				2000 h	WX3353318
						1000 h	WX3353315
						500 h	WX3353314
					50 h		WX3353313
HC 250i	H256	1 - 374				1000 h	3035126
						500 h	3035124
					50 h		3035123
						2000 h	3035128
		375 - 9999				2000 h	WX3353318
						1000 h	WX3353315
						500 h	WX3353314
					50 h		WX3353313
HC 250i VC	H256	1 - 374				2000 h	3035128
						1000 h	3035126
					50 h		3035123
						500 h	3035124
		375 - 9999			50 h		WX3353313

Due to possible technical changes, always refer to the information in the instruction manual.

MAINTENANCE PARTS

MAINTENANCE PACKAGES							
Series code	Serial code	Series range	Version	Cabin	First service	Replacement interval	Part no.
HC 250i VC	H256	375 - 9999				1000 h	WX3353315
						500 h	WX3353314
						2000 h	WX3353318
3205	H188	53 - 9999				500 h	2410395
					50 h		2410479
						2000 h	2410398
						1000 h	2410396
3307	H189	1127 - 9999			50 h		2410399
						2000 h	2410403
						1000 h	2410402
						500 h	2410400
3410	H179	1207 - 2443			50 h		2410405
						500 h	2410406
						1000 h	2410407
						2000 h	2410408
		2444 - 9999			50 h		2504286
						500 h	2504288
						1000 h	2504290
						2000 h	2504292
	H206	81 - 9999			50 h		2410410
						2000 h	2410416
						1000 h	2410414
						500 h	2410412
	H217	1 - 261			50 h		2504341
						500 h	2504344
						1000 h	2504349

Due to possible technical changes, always refer to the information in the instruction manual.

MAINTENANCE PACKAGES

Series code	Serial code	Series range	Version	Cabin	First service	Replacement interval	Part no.
3410	H217	1 - 261				2000 h	2504352
		262 - 9999			50 h		2504354
						500 h	2504355
						1000 h	2504356
						2000 h	2504357
3411	H179	1207 - 2443			50 h		2410405
						500 h	2410406
						1000 h	2410407
						2000 h	2410408
		2444 - 9999			50 h		2504286
						500 h	2504288
						1000 h	2504290
						2000 h	2504292
	H206	81 - 9999			50 h		2410410
						2000 h	2410416
						1000 h	2410414
						500 h	2410412
	H217	1 - 261			50 h		2504341
						500 h	2504344
						1000 h	2504349
						2000 h	2504352
		262 - 9999			50 h		2504354
						500 h	2504355
						1000 h	2504356
						2000 h	2504357
	H221	1 - 9999			50 h		2591863

Due to possible technical changes, always refer to the information in the instruction manual.

MAINTENANCE PARTS

MAINTENANCE PACKAGES							
Series code	Serial code	Series range	Version	Cabin	First service	Replacement interval	Part no.
3411	H221	1 - 9999				2000 h	2591867
						1000 h	2591866
						500 h	2591865
3412	H180	1357 - 3370			50 h		2410418
						500 h	2410420
						1000 h	2410422
						2000 h	2410424
		3371 - 9999				2000 h	2504503
					50 h		2504504
						500 h	2504506
						1000 h	2504507
3414	H180	1357 - 3370			50 h		2410418
						500 h	2410420
						1000 h	2410422
						2000 h	2410424
		3371 - 9999				2000 h	2504503
					50 h		2504504
						500 h	2504506
						1000 h	2504507
3516	H176	1502 - 2488			50 h		2410428
						500 h	2410429
						1000 h	2410432
						2000 h	2410434
		2489 - 9999			50 h		2504312
						500 h	2504313
						1000 h	2504314

Due to possible technical changes, always refer to the information in the instruction manual.

MAINTENANCE PACKAGES

Series code	Serial code	Series range	Version	Cabin	First service	Replacement interval	Part no.
3516	H176	2489 - 9999				2000 h	2504316
3518	H176	1502 - 2488				1000 h	2410432
						500 h	2410429
					50 h		2410428
						2000 h	2410434
		2489 - 9999				1000 h	2504314
						500 h	2504313
					50 h		2504312
						2000 h	2504316
3520	H176	1502 - 2488			50 h		2410428
						500 h	2410429
						1000 h	2410432
						2000 h	2410434
		2489 - 9999			50 h		2504312
						500 h	2504313
						1000 h	2504314
						2000 h	2504316
3625	H177	59 - 186				1000 h	2410438
						500 h	2410437
					50 h		2410435
						2000 h	2410439
		187 - 9999				1000 h	2504335
						500 h	2504334
					50 h		2504332
						2000 h	2504336
HD 8	H199	221 - 2090				500 h; 1000 h	2410360

Due to possible technical changes, always refer to the information in the instruction manual.

MAINTENANCE PARTS

MAINTENANCE PACKAGES							
Series code	Serial code	Series range	Version	Cabin	First service	Replacement interval	Part no.
HD 8	H199	221 - 2090				2000 h	2410369
						250 h	2410355
					50 h		2410350
		2091 - 9999			50 h		2410352
						500 h; 1000 h	2410364
						2000 h	2410372
HD 10C	H199	221 - 2090			50 h		2410350
						500 h; 1000 h	2410360
						250 h	2410355
						2000 h	2410369
		2091 - 9999				2000 h	2410372
						500 h; 1000 h	2410364
					50 h		2410352
HD 8	H263	1 - 9999				500 h	2928995
					50 h		2410352
						1000 h	2410364
						2000 h	2410372
HD 10C	H263	1 - 9999				1000 h	2410364
						2000 h	2410372
						500 h	2928995
					50 h		2410352
HD 10	H230	4323 - 9999				500 h; 1000 h	2410380
					50 h		2410483
						2000 h	2410386
	H262	1 - 9999				500 h; 1000 h	2410380
					50 h		2410483

Due to possible technical changes, always refer to the information in the instruction manual.

MAINTENANCE PACKAGES

Series code	Serial code	Series range	Version	Cabin	First service	Replacement interval	Part no.
HD 10	H262	1 - 9999				2000 h	2410386
HD 10i	H251	1 - 9999				500 h	2839356
					50 h		2839355
						1000 h	2839358
						2000 h	2839360
HD 12	H230	4323 - 9999				500 h; 1000 h	2410380
					50 h		2410483
						2000 h	2410386
	H262	1 - 9999				500 h; 1000 h	2410380
					50 h		2410483
						2000 h	2410386
HD 12i	H251	1 - 9999				500 h	2839356
					50 h		2839355
						1000 h	2839358
						2000 h	2839360
HD 13	H201	170 - 3546		without operator's cabin		2000 h	2410394
				with operator's cabin		500 h; 1000 h	2504443
				without operator's cabin; with operator's cabin	50 h		2410485
				without operator's cabin; with operator's cabin		250 h	2410464
				without operator's cabin		500 h; 1000 h	2410456
				with operator's cabin		2000 h	2410392
		3547 - 9999		without operator's cabin; with operator's cabin	50 h		2593827

MAINTENANCE PARTS

MAINTENANCE PACKAGES							
Series code	Serial code	Series range	Version	Cabin	First service	Replacement interval	Part no.
HD 13	H201	3547 - 9999		without operator's cabin; with operator's cabin		250 h	2410464
				without operator's cabin		2000 h	2593840
				with operator's cabin		2000 h	2593839
				without operator's cabin		500 h; 1000 h	2593838
				with operator's cabin		500 h; 1000 h	2593837
HD 13i	H231	1 - 9999		without operator's cabin; with operator's cabin	50 h		2504358
				with operator's cabin		500 h	2504359
				with operator's cabin		1000 h	2504360
				without operator's cabin		2000 h	2504669
				without operator's cabin		500 h	2504662
				without operator's cabin		1000 h	2504667
				with operator's cabin		2000 h	2504361
	H265	1 - 9999		with operator's cabin		500 h	2504359
				without operator's cabin		1000 h	2504667
				without operator's cabin; with operator's cabin	50 h		2504358
				with operator's cabin		2000 h	2504361
				without operator's cabin		500 h	2504662
				with operator's cabin		1000 h	2504360
				without operator's cabin		2000 h	2504669
	H285	1 - 9999		with operator's cabin		2000 h	2929024
				without operator's cabin		1000 h	2929004
				with operator's cabin		1000 h	2929006

MAINTENANCE PACKAGES

Series code	Serial code	Series range	Version	Cabin	First service	Replacement interval	Part no.
HD 13i	H285	1 - 9999		without operator's cabin; with operator's cabin	50 h		2928997
				with operator's cabin		500 h	2929001
				without operator's cabin		500 h	2928999
				without operator's cabin		2000 h	2929021
HD 14	H201	170 - 3546		with operator's cabin		2000 h	2410392
				without operator's cabin		2000 h	2410394
				without operator's cabin		500 h; 1000 h	2410456
				without operator's cabin; with operator's cabin		250 h	2410464
				without operator's cabin; with operator's cabin	50 h		2410485
				with operator's cabin		500 h; 1000 h	2504443
		3547 - 9999		without operator's cabin; with operator's cabin		250 h	2410464
				without operator's cabin; with operator's cabin	50 h		2593827
				with operator's cabin		500 h; 1000 h	2593837
				without operator's cabin		500 h; 1000 h	2593838
				with operator's cabin		2000 h	2593839
				without operator's cabin		2000 h	2593840
HD 14i	H231	1 - 9999		without operator's cabin; with operator's cabin	50 h		2504358
				with operator's cabin		500 h	2504359
				with operator's cabin		1000 h	2504360
				without operator's cabin		2000 h	2504669

Due to possible technical changes, always refer to the information in the instruction manual.

MAINTENANCE PACKAGES							
Series code	Serial code	Series range	Version	Cabin	First service	Replacement interval	Part no.
HD 14i	H231	1 - 9999		without operator's cabin		500 h	2504662
				without operator's cabin		1000 h	2504667
				with operator's cabin		2000 h	2504361
	H265	1 - 9999		without operator's cabin		2000 h	2504669
				without operator's cabin		1000 h	2504667
				with operator's cabin		2000 h	2504361
				with operator's cabin		1000 h	2504360
				without operator's cabin; with operator's cabin	50 h		2504358
				without operator's cabin		500 h	2504662
				with operator's cabin		500 h	2504359
	H285	1 - 9999		without operator's cabin; with operator's cabin	50 h		2928997
				without operator's cabin		1000 h	2929004
				with operator's cabin		2000 h	2929024
				with operator's cabin		500 h	2929001
				with operator's cabin		1000 h	2929006
				without operator's cabin		2000 h	2929021
				without operator's cabin		500 h	2928999
HD 14 TT	H208	1 - 157		with operator's cabin		2000 h	2410411
				without operator's cabin		2000 h	2410413
				with operator's cabin		500 h; 1000 h	2410458
				without operator's cabin; with operator's cabin	50 h		2410489
				without operator's cabin; with operator's cabin		250 h	2410492

Due to possible technical changes, always refer to the information in the instruction manual.

MAINTENANCE PACKAGES

Series code	Serial code	Series range	Version	Cabin	First service	Replacement interval	Part no.
HD 14 TT	H208	1 - 157		without operator's cabin		500 h; 1000 h	2504443
		158 - 9999		without operator's cabin; with operator's cabin		250 h	2410492
				without operator's cabin; with operator's cabin	50 h		2593827
				with operator's cabin		500 h; 1000 h	2593837
				without operator's cabin		500 h; 1000 h	2593838
				with operator's cabin		2000 h	2593843
				without operator's cabin		2000 h	2593844
HD+ 70i	H186	1 - 9999	Machine without unsplit vibratory drum			1000 h	2839398
			Machine without unsplit vibratory drum			2000 h	2410359
			Machine with one unsplit vibratory drum			1000 h	2839394
			Machine with two unsplit vibratory drums			1000 h	2839390
			Machine with two unsplit vibratory drums			2000 h	2410354
			Machine with one unsplit vibratory drum			2000 h	2410356
						500 h	2410353
	H272	1 - 9999	Machine without unsplit vibratory drum			2000 h	2410359
			Machine with one unsplit vibratory drum			2000 h	2410356

Due to possible technical changes, always refer to the information in the instruction manual.

MAINTENANCE PACKAGES							
Series code	Serial code	Series range	Version	Cabin	First service	Replacement interval	Part no.
HD+ 70i	H272	1 - 9999	Machine with two unsplit vibratory drums			2000 h	2410354
						500 h	2410353
			Machine without unsplit vibratory drum			1000 h	2839398
			Machine with one unsplit vibratory drum			1000 h	2839394
			Machine with two unsplit vibratory drums			1000 h	2839390
HD+ 80i	H186	1 - 9999	Machine with one unsplit vibratory drum			1000 h	2839394
			Machine without unsplit vibratory drum			1000 h	2839398
						500 h	2410353
			Machine with two unsplit vibratory drums			1000 h	2839390
			Machine with one unsplit vibratory drum			2000 h	2410356
			Machine without unsplit vibratory drum			2000 h	2410359
			Machine with two unsplit vibratory drums			2000 h	2410354
	H272	1 - 9999	Machine with two unsplit vibratory drums			2000 h	2410354
			Machine without unsplit vibratory drum			2000 h	2410359

Due to possible technical changes, always refer to the information in the instruction manual.

MAINTENANCE PACKAGES

Series code	Serial code	Series range	Version	Cabin	First service	Replacement interval	Part no.
HD+ 80i	H272	1 - 9999	Machine with one unsplit vibratory drum			1000 h	2839394
						500 h	2410353
			Machine without unsplit vibratory drum			1000 h	2839398
			Machine with one unsplit vibratory drum			2000 h	2410356
			Machine with two unsplit vibratory drums			1000 h	2839390
HD+ 90	H185	1 - 9999				500 h; 1000 h	2410362
			Machine without unsplit vibratory drum			2000 h	2410367
			Machine with one unsplit vibratory drum			2000 h	2410366
			Machine with two unsplit vibratory drums			2000 h	2410363
HD+ 90i	H209	1 - 9999				500 h; 1000 h	2410370
			Machine with two unsplit vibratory drums			2000 h	2410371
			Machine without unsplit vibratory drum			2000 h	2410377
			Machine with one unsplit vibratory drum			2000 h	2410375
			Machine with one unsplit vibratory drum			2000 h	2410374

MAINTENANCE PARTS

MAINTENANCE PACKAGES							
Series code	Serial code	Series range	Version	Cabin	First service	Replacement interval	Part no.
HD+ 90	H258	1 - 228	Machine with one unsplit vibratory drum			2000 h	2410366
			Machine with two unsplit vibratory drums			2000 h	2410363
			Machine without unsplit vibratory drum			2000 h	2410367
						500 h; 1000 h	2410362
		229 - 575	Machine with one unsplit vibratory drum			1000 h	3102841
						500 h	3102839
			Machine with two unsplit vibratory drums			1000 h	3102840
			Machine without unsplit vibratory drum			1000 h	3102842
			Machine with one unsplit vibratory drum			2000 h	3102845
			Machine with two unsplit vibratory drums			2000 h	3102844
			Machine without unsplit vibratory drum			2000 h	3102846
		576 - 9999				500 h	WX3353351
			Machine with two unsplit vibratory drums			1000 h	WX3353352
			Machine with one unsplit vibratory drum			1000 h	WX3353354

MAINTENANCE PACKAGES

Series code	Serial code	Series range	Version	Cabin	First service	Replacement interval	Part no.
HD+ 90	H258	576 - 9999	Machine without unsplit vibratory drum			1000 h	WX3353356
			Machine without unsplit vibratory drum			2000 h	WX3353359
			Machine with one unsplit vibratory drum			2000 h	WX3353358
			Machine with two unsplit vibratory drums			2000 h	WX3353357
HD+ 90i	H242	1 - 9999				500 h; 1000 h	2531738
			Machine without unsplit vibratory drum			2000 h	2531743
			Machine with one unsplit vibratory drum			2000 h	2531741
			Machine with two unsplit vibratory drums			2000 h	2531740
	H241	1 - 9999			50 h		2651359
						500 h	2651361
			Machine without unsplit vibratory drum			2000 h	2651370
			Machine with two unsplit vibratory drums			2000 h	2651366
			Machine with one unsplit vibratory drum			2000 h	2651367
						1000 h	2651363
HD+ 90i PH	H276	1 - 9999			50 h		2651359
						1000 h	2651363

Due to possible technical changes, always refer to the information in the instruction manual.

MAINTENANCE PACKAGES							
Series code	Serial code	Series range	Version	Cabin	First service	Replacement interval	Part no.
HD+ 90i PH	H276	1 - 9999	Machine without unsplit vibratory drum			2000 h	2651370
			Machine with one unsplit vibratory drum			2000 h	2651367
			Machine with two unsplit vibratory drums			2000 h	2651366
						500 h	2651361
HD+ 110	H185	1 - 9999				500 h; 1000 h	2410362
			Machine without unsplit vibratory drum			2000 h	2410367
			Machine with one unsplit vibratory drum			2000 h	2410366
			Machine with two unsplit vibratory drums			2000 h	2410363
	H258	1 - 228	Machine with one unsplit vibratory drum			2000 h	2410366
						500 h; 1000 h	2410362
			Machine with two unsplit vibratory drums			2000 h	2410363
			Machine without unsplit vibratory drum			2000 h	2410367
		229 - 575	Machine with one unsplit vibratory drum			1000 h	3102841
						500 h	3102839
			Machine with two unsplit vibratory drums			1000 h	3102840

Due to possible technical changes, always refer to the information in the instruction manual.

MAINTENANCE PACKAGES

Series code	Serial code	Series range	Version	Cabin	First service	Replacement interval	Part no.
HD+ 110	H258	229 - 575	Machine without unsplit vibratory drum			1000 h	3102842
			Machine with one unsplit vibratory drum			2000 h	3102845
			Machine with two unsplit vibratory drums			2000 h	3102844
			Machine without unsplit vibratory drum			2000 h	3102846
		576 - 9999				500 h	WX3353351
			Machine with two unsplit vibratory drums			1000 h	WX3353352
			Machine with one unsplit vibratory drum			1000 h	WX3353354
			Machine without unsplit vibratory drum			1000 h	WX3353356
			Machine without unsplit vibratory drum			2000 h	WX3353359
			Machine with one unsplit vibratory drum			2000 h	WX3353358
			Machine with two unsplit vibratory drums			2000 h	WX3353357
HD+ 110i	H209	1 - 9999				500 h; 1000 h	2410370
			Machine with one unsplit vibratory drum			2000 h	2410375
			Machine with one unsplit vibratory drum			2000 h	2410374

Due to possible technical changes, always refer to the information in the instruction manual.

MAINTENANCE PACKAGES							
Series code	Serial code	Series range	Version	Cabin	First service	Replacement interval	Part no.
HD+ 110i	H209	1 - 9999	Machine with two unsplit vibratory drums			2000 h	2410371
	H242	1 - 9999				500 h; 1000 h	2531738
			Machine with one unsplit vibratory drum			2000 h	2531741
			Machine with two unsplit vibratory drums			2000 h	2531740
HD+ 120	H184	54 - 9999				500 h; 1000 h	2410381
			Machine with one unsplit vibratory drum			2000 h	2410385
			Machine with two unsplit vibratory drums			2000 h	2410383
	H259	1 - 224	Machine with two unsplit vibratory drums			1000 h	WX3353369
						500 h	WX3353368
			Machine with one unsplit vibratory drum			1000 h	WX3353370
			Machine with two unsplit vibratory drums			2000 h	WX3353372
		225 - 484	Machine with two unsplit vibratory drums			1000 h	WX3353382
						500 h	WX3353378
			Machine with one unsplit vibratory drum			1000 h	WX3353383
			Machine with one unsplit vibratory drum			2000 h	WX3353389

Due to possible technical changes, always refer to the information in the instruction manual.

MAINTENANCE PACKAGES

Series code	Serial code	Series range	Version	Cabin	First service	Replacement interval	Part no.
HD+ 120	H259	225 - 484	Machine with two unsplit vibratory drums			2000 h	WX3353388
		485 - 9999				500 h	WX3353393
			Machine with two unsplit vibratory drums			1000 h	WX3353401
			Machine with two unsplit vibratory drums			2000 h	WX3353404
			Machine with one unsplit vibratory drum			1000 h	WX3353402
			Machine with one unsplit vibratory drum			2000 h	WX3353405
HD+ 120i	H207	1 - 9999				500 h; 1000 h	2410388
			Machine with two unsplit vibratory drums			2000 h	2410389
			Machine with one unsplit vibratory drum			2000 h	2410391
	H243	1 - 9999	Machine with two unsplit vibratory drums			1000 h	3102853
			Machine with one unsplit vibratory drum			2000 h	2591905
			Machine with two unsplit vibratory drums			2000 h	2591907
						500 h	2591903
	H274	11 - 9999	Machine with one unsplit vibratory drum			1000 h	3035131

MAINTENANCE PARTS

MAINTENANCE PACKAGES							
Series code	Serial code	Series range	Version	Cabin	First service	Replacement interval	Part no.
HD+ 120i	H274	11 - 9999	Machine with two unsplit vibratory drums			2000 h	3035133
			Machine with one unsplit vibratory drum			2000 h	3035136
			Machine with two unsplit vibratory drums			1000 h	3153209
						500 h	3035129
HD+ 140	H184	54 - 9999	Machine with one unsplit vibratory drum			2000 h	2410385
			Machine with two unsplit vibratory drums			2000 h	2410387
						500 h; 1000 h	2410381
	H259	1 - 224	Machine with one unsplit vibratory drum			1000 h	WX3353370
			Machine with two unsplit vibratory drums			1000 h	WX3353371
						500 h	WX3353368
			Machine with two unsplit vibratory drums			2000 h	WX3353375
		225 - 484	Machine with one unsplit vibratory drum			2000 h	WX3353389
			Machine with two unsplit vibratory drums			2000 h	WX3353391
			Machine with one unsplit vibratory drum			1000 h	WX3353383

MAINTENANCE PACKAGES

Series code	Serial code	Series range	Version	Cabin	First service	Replacement interval	Part no.
HD+ 140	H259	225 - 484	Machine with two unsplit vibratory drums			1000 h	WX3353385
						500 h	WX3353378
		485 - 9999				500 h	WX3353393
			Machine with two unsplit vibratory drums			1000 h	WX3353403
			Machine with one unsplit vibratory drum			1000 h	WX3353402
			Machine with two unsplit vibratory drums			2000 h	WX3353406
			Machine with one unsplit vibratory drum			2000 h	WX3353405
HD+ 140i	H207	1 - 9999	Machine with two unsplit vibratory drums			2000 h	2410393
			Machine with one unsplit vibratory drum			2000 h	2410391
						500 h; 1000 h	2410388
	H243	1 - 9999	Machine with two unsplit vibratory drums			1000 h	3102853
			Machine with two unsplit vibratory drums			2000 h	2591908
			Machine with one unsplit vibratory drum			2000 h	2591905
						500 h	2591903
	H274	11 - 9999	Machine with two unsplit vibratory drums			1000 h	3153207

Due to possible technical changes, always refer to the information in the instruction manual.

MAINTENANCE PACKAGES							
Series code	Serial code	Series range	Version	Cabin	First service	Replacement interval	Part no.
HD+ 140i	H274	11 - 9999	Machine with two unsplit vibratory drums			2000 h	3035136
			Machine with one unsplit vibratory drum			2000 h	3035135
						500 h	3035129
			Machine with one unsplit vibratory drum			1000 h	3035131
HD 70	H187	875 - 1502	Machine with two unsplit vibratory drums			1000 h	2410431
						50 h	2839361
			Machine with two unsplit vibratory drums			2000 h	2410415
						500 h	2410460
		1503 - 9999	Machine with two unsplit vibratory drums			1000 h	2839366
						500 h	2839364
			Machine with two unsplit vibratory drums			2000 h	2839370
						50 h	2839363
		1503				50 h	2839363
HD 75	H187	875 - 1502	Machine with one unsplit vibratory drum			2000 h	2410417
			Machine without unsplit vibratory drum			2000 h	2410425
			Machine with one unsplit vibratory drum			1000 h	2410433

MAINTENANCE PACKAGES

Series code	Serial code	Series range	Version	Cabin	First service	Replacement interval	Part no.
HD 75	H187	875 - 1502	Machine without unsplit vibratory drum			1000 h	2410450
						500 h	2410460
						50 h	2839361
		1503 - 9999	Machine with one unsplit vibratory drum			1000 h	2839367
			Machine without unsplit vibratory drum			2000 h	2839374
			Machine with one unsplit vibratory drum			2000 h	2839371
						500 h	2839364
			Machine without unsplit vibratory drum			1000 h	2839369
HD 90	H181	1889 - 3437	Machine with one unsplit vibratory drum			1000 h	2410344
			Machine without unsplit vibratory drum			2000 h	2504512
			Machine without unsplit vibratory drum			1000 h	2504511
					50 h		2410490
						500 h	2410462
			Machine with two unsplit vibratory drums			1000 h	2410452
			Machine with two unsplit vibratory drums			2000 h	2410427

MAINTENANCE PARTS

MAINTENANCE PACKAGES							
Series code	Serial code	Series range	Version	Cabin	First service	Replacement interval	Part no.
HD 90	H181	1889 - 3437	Machine with one unsplit vibratory drum			2000 h	2410347
		3438 - 9999			50 h		2839375
			Machine with one unsplit vibratory drum			2000 h	2839387
			Machine without unsplit vibratory drum			1000 h	2839381
			Machine with two unsplit vibratory drums			1000 h	2839379
			Machine with two unsplit vibratory drums			2000 h	2839385
						500 h	2839378
			Machine without unsplit vibratory drum			2000 h	2839388
			Machine with one unsplit vibratory drum			1000 h	2839380
HD 110	H181	1889 - 3437	Machine with two unsplit vibratory drums			2000 h	2410427
			Machine with two unsplit vibratory drums			1000 h	2410452
						500 h	2410462
					50 h		2410490
		3438 - 9999	Machine with two unsplit vibratory drums			2000 h	2839385
					50 h		2839375

Due to possible technical changes, always refer to the information in the instruction manual.

MAINTENANCE PACKAGES

Series code	Serial code	Series range	Version	Cabin	First service	Replacement interval	Part no.
HD 110	H181	3438 - 9999	Machine with two unsplit vibratory drums			1000 h	2839379
						500 h	2839378
DV 65	H197	40 - 9999				2000 h	2410342
						500 h; 1000 h	2410341
DV 70	H191	115 - 9999				2000 h	2410342
						500 h; 1000 h	2410341
DV 85	H198	50 - 9999				2000 h	2410346
						500 h; 1000 h	2410345
DV 90	H192	120 - 9999				2000 h	2410346
						500 h; 1000 h	2410345
DV+ 70i	H225	1 - 321				1000 h	2503859
						500 h	2503857
						2000 h	2503861
		1 - 9999			50 h		2503846
		322 - 9999				2000 h	2839342
						1000 h	2839339
						500 h	2839328
	H277	1 - 9999				2000 h	2839354
						1000 h	2839352
						500 h	2839349
					50 h		2839348
DV+ 90i	H226	1 - 9999			50 h		2503863
						2000 h	2503867
						500 h; 1000 h	2503865
	H246	1 - 9999				2000 h	2591899

Due to possible technical changes, always refer to the information in the instruction manual.

MAINTENANCE PARTS

MAINTENANCE PACKAGES							
Series code	Serial code	Series range	Version	Cabin	First service	Replacement interval	Part no.
DV+ 90i	H246	1 - 9999				500 h; 1000 h	2591896
	H278	1 - 9999				2000 h	2928994
						500 h; 1000 h	2928993
HW 90	H123	1024 - 9999			50 h		2410461
						2000 h	2410466
						1000 h	2410465
						500 h	2410463
HP 280	H249	1 - 156				1000 h	2651381
						500 h	2651379
					50 h		2651378
						2000 h	2651383
		157 - 659				2000 h	WX3330242
					50 h		WX3330239
						500 h	WX3330240
						1000 h	WX3330241
		660 - 9999				2000 h	WX3353701
						1000 h	WX3353700
					50 h		WX3353472
						500 h	WX3353699
HP 240	H283	1 - 27				2000 h	2651383
					50 h		2651378
						500 h	2651379
						1000 h	2651381
		28 - 594				2000 h	3102859
						500 h	3102857
					50 h		3102855

Due to possible technical changes, always refer to the information in the instruction manual.

MAINTENANCE PACKAGES

Series code	Serial code	Series range	Version	Cabin	First service	Replacement interval	Part no.
HP 240	H283	28 - 594				1000 h	3102858
		595 - 9999				1000 h	WX3330249
					50 h		WX3330246
						500 h	WX3330247
						2000 h	WX3330252
HP 280i	H271	1 - 9999				500 h	2651374
					150 h		2651372
						2000 h	2651377
						1000 h	2651376
HP 240i	H282	1 - 257				2000 h	2651377
						500 h	2651374
					50 h		2651372
						1000 h	2651376
		258 - 9999				2000 h	WX3330269
						1000 h	WX3330268
						500 h	WX3330267
					50 h		WX3330264
GRW 280i	H212	1 - 9999			50 h		2410475
						2000 h	2410478
						1000 h	2410477
						500 h	2410476
	H244	1 - 9999				2000 h	2651377
						1000 h	2651376
						500 h	2651374
					50 h		2651372
GRW 180i	H228	1 - 9999			50 h		2410475

Due to possible technical changes, always refer to the information in the instruction manual.

MAINTENANCE PARTS

MAINTENANCE PACKAGES							
Series code	Serial code	Series range	Version	Cabin	First service	Replacement interval	Part no.
GRW 180i	H228	1 - 9999				2000 h	2504376
						1000 h	2410477
						500 h	2410476
GRW 280	H195	1 - 9999			50 h		2410540
						2000 h	2410543
						1000 h	2410542
						500 h	2410541
	H229	1 - 9999			50 h		2410471
						2000 h	2410474
						1000 h	2410473
						500 h	2410472
GRW 10	H190	1 - 9999			50 h		2410467
						500 h	2410468
						250 h	2504495
						2000 h	2410470
						1000 h	2410469
GRW 15	H190	1 - 9999			50 h		2410467
						500 h	2410468
						250 h	2504495
						2000 h	2410470
						1000 h	2410469
GRW 18	H190	1 - 9999			50 h		2410467
						500 h	2410468
						250 h	2504495
						2000 h	2410470
						1000 h	2410469

Due to possible technical changes, always refer to the information in the instruction manual.

MAINTENANCE PACKAGES

Series code	Serial code	Series range	Version	Cabin	First service	Replacement interval	Part no.
GRW 21	H190	1 - 9999			50 h		2410467
						500 h	2410468
						250 h	2504495
						2000 h	2410470
						1000 h	2410469
GRW 24	H190	1 - 9999			50 h		2410467
						500 h	2410468
						250 h	2504495
						2000 h	2410470
						1000 h	2410469
HP 180i	H250	1 - 355			50 h		WX3353447
						500 h	WX3353452
						1000 h	WX3353454
						2000 h	WX3353456
		356 - 9999			50 h		WX3330259
						2000 h	WX3330263
						1000 h	WX3330261
						500 h	WX3330260
HC 100i	H252	1 - 1906				500 h	3102820
						1000 h	3102821
				with air-conditioning system		2000 h	3102825
				without air-conditioning system		2000 h	3102824
					50 h		3102819
		1907 - 9999		without air-conditioning system		2000 h	WX3353044
						1000 h	WX3353042
						500 h	WX3353040

Due to possible technical changes, always refer to the information in the instruction manual.

MAINTENANCE PARTS

MAINTENANCE PACKAGES							
Series code	Serial code	Series range	Version	Cabin	First service	Replacement interval	Part no.
HC 100i	H252	1907 - 9999			50 h		WX3353039
				with air-conditioning system		2000 h	WX3353043
HC 110i	H252	1 - 1906				500 h	3102820
						1000 h	3102821
				without air-conditioning system		2000 h	3102824
				with air-conditioning system		2000 h	3102825
					50 h		3102819
		1907 - 9999		with air-conditioning system		2000 h	WX3353043
						1000 h	WX3353042
						500 h	WX3353040
					50 h		WX3353039
				without air-conditioning system		2000 h	WX3353044
HC 120i	H252	1 - 1906				1000 h	3102821
					50 h		3102819
						500 h	3102820
				with air-conditioning system		2000 h	3102825
				without air-conditioning system		2000 h	3102824
		1907 - 9999				1000 h	WX3353042
						500 h	WX3353040
					50 h		WX3353039
				with air-conditioning system		2000 h	WX3353043
				without air-conditioning system		2000 h	WX3353044
HC 130i	H254	1 - 897				1000 h	3102828
						500 h	3102827
				without air-conditioning system		2000 h	3102830
				with air-conditioning system		2000 h	3102832

Due to possible technical changes, always refer to the information in the instruction manual.

MAINTENANCE PACKAGES

Series code	Serial code	Series range	Version	Cabin	First service	Replacement interval	Part no.
HC 130i	H254	1 - 897			50 h		3102826
		898 - 9999		without air-conditioning system		2000 h	WX3353310
						1000 h	WX3353047
						500 h	WX3353046
					50 h		WX3353045
				with air-conditioning system		2000 h	WX3353309
HC 140i	H254	1 - 897				500 h	3102827
				without air-conditioning system		2000 h	3102830
						1000 h	3102828
				with air-conditioning system		2000 h	3102832
					50 h		3102826
		898 - 9999		without air-conditioning system		2000 h	WX3353310
						1000 h	WX3353047
						500 h	WX3353046
					50 h		WX3353045
				with air-conditioning system		2000 h	WX3353309
HC 160i	H254	1 - 897				1000 h	3102828
						500 h	3102827
				with air-conditioning system		2000 h	3102832
				without air-conditioning system		2000 h	3102830
					50 h		3102826
		898 - 9999		without air-conditioning system		2000 h	WX3353310
						1000 h	WX3353047
						500 h	WX3353046
					50 h		WX3353045
				with air-conditioning system		2000 h	WX3353309

Due to possible technical changes, always refer to the information in the instruction manual.

MAINTENANCE PARTS

MAINTENANCE PACKAGES							
Series code	Serial code	Series range	Version	Cabin	First service	Replacement interval	Part no.
HC 130	H255	1 - 6		with air-conditioning system		2000 h	WX3330163
		1 - 9999			50 h		3102804
						500 h	3102811
						1000 h	3102812
				without air-conditioning system		2000 h	3102813
HD+ 110i	H273	1 - 9999	Machine with one unsplit vibratory drum			2000 h	3102851
			Machine with one unsplit vibratory drum			2000 h	3102852
						500 h	3102847
			Machine with two unsplit vibratory drums			1000 h	3102848
			Machine with one unsplit vibratory drum			1000 h	3102849
			Machine with two unsplit vibratory drums			2000 h	3102850
HD+ 90i	H273	1 - 9999	Machine with one unsplit vibratory drum			2000 h	3102852
			Machine with one unsplit vibratory drum			2000 h	3102851
						500 h	3102847
			Machine with two unsplit vibratory drums			2000 h	3102850
			Machine with two unsplit vibratory drums			1000 h	3102848

MAINTENANCE PACKAGES

Series code	Serial code	Series range	Version	Cabin	First service	Replacement interval	Part no.
HD+ 90i	H273	1 - 9999	Machine with one unsplit vibratory drum			1000 h	3102849
HC 50i	H287	1 - 650			50 h		3102814
						1000 h	3102817
						2000 h	3102818
						500 h	3102815
		651 - 9999				2000 h	WX3353030
						1000 h	WX3353029
					50 h		WX3353026
						500 h	WX3353028
HC 70i	H287	1 - 650			50 h		3102814
						1000 h	3102817
						500 h	3102815
						2000 h	3102818
		651 - 9999				2000 h	WX3353030
						1000 h	WX3353029
						500 h	WX3353028
					50 h		WX3353026
HX 70i	H297	1 - 236				2000 h	2839354
					50 h		2839348
						1000 h	2839352
						500 h	2839349
		237 - 9999			50 h		WX3330219
						2000 h	WX3330222
						1000 h	WX3330221
						500 h	WX3330220

Due to possible technical changes, always refer to the information in the instruction manual.

MAINTENANCE PACKAGES							
Series code	Serial code	Series range	Version	Cabin	First service	Replacement interval	Part no.
HX 90i	H299	1 - 281				2000 h	2928994
						500 h; 1000 h	2928993
		282 - 9999				1000 h	WX3330229
						500 h	WX3330225
						2000 h	WX3330230
HD+ 110i	H303	1 - 271	Machine without unsplit vibratory drum			2000 h	3102852
			Machine with one unsplit vibratory drum			2000 h	3102851
			Machine with one unsplit vibratory drum			1000 h	3102849
			Machine with two unsplit vibratory drums			1000 h	3102848
			Machine with two unsplit vibratory drums			2000 h	3102850
		1 - 271	Machine without unsplit vibratory drum			1000 h	3102847
		1 - 9999				500 h	3102847
		272 - 9999	Machine with one unsplit vibratory drum			2000 h	WX3353366
			Machine with two unsplit vibratory drums			2000 h	WX3353364
			Machine without unsplit vibratory drum			1000 h	WX3353363
			Machine with one unsplit vibratory drum			1000 h	WX3353362

Due to possible technical changes, always refer to the information in the instruction manual.

MAINTENANCE PACKAGES

Series code	Serial code	Series range	Version	Cabin	First service	Replacement interval	Part no.
HD+ 110i	H303	272 - 9999	Machine with two unsplit vibratory drums			1000 h	WX3353361
			Machine without unsplit vibratory drum			2000 h	WX3353367
HD+ 90i	H303	1 - 271	Machine with two unsplit vibratory drums			1000 h	3102848
			Machine with one unsplit vibratory drum			1000 h	3102849
			Machine with two unsplit vibratory drums			2000 h	3102850
			Machine without unsplit vibratory drum			2000 h	3102852
			Machine with one unsplit vibratory drum			2000 h	3102851
		1 - 271	Machine without unsplit vibratory drum			1000 h	3102847
		1 - 9999				500 h	3102847
		272 - 9999	Machine with two unsplit vibratory drums			1000 h	WX3353361
			Machine without unsplit vibratory drum			2000 h	WX3353367
			Machine with one unsplit vibratory drum			2000 h	WX3353366
			Machine with two unsplit vibratory drums			2000 h	WX3353364

MAINTENANCE PARTS

MAINTENANCE PACKAGES							
Series code	Serial code	Series range	Version	Cabin	First service	Replacement interval	Part no.
HD+ 90i	H303	272 - 9999	Machine without unsplit vibratory drum			1000 h	WX3353363
			Machine with one unsplit vibratory drum			1000 h	WX3353362
HD+ 120i	H304	1 - 393				500 h	3035129
			Machine with one unsplit vibratory drum			2000 h	3035136
			Machine with two unsplit vibratory drums			2000 h	3035133
			Machine with two unsplit vibratory drums			1000 h	3153209
			Machine with one unsplit vibratory drum			1000 h	3035131
		394 - 9999	Machine with two unsplit vibratory drums			2000 h	WX3353434
			Machine with one unsplit vibratory drum			1000 h	WX3353431
			Machine with two unsplit vibratory drums			1000 h	WX3353428
						500 h	WX3353427
			Machine with one unsplit vibratory drum			2000 h	WX3353436
HD+ 140i	H304	1 - 393				500 h	3035129
			Machine with one unsplit vibratory drum			2000 h	3035135

MAINTENANCE PACKAGES

Series code	Serial code	Series range	Version	Cabin	First service	Replacement interval	Part no.
HD+ 140i	H304	1 - 393	Machine with two unsplit vibratory drums			2000 h	3035136
			Machine with two unsplit vibratory drums			1000 h	3153207
			Machine with one unsplit vibratory drum			1000 h	3035131
		394 - 9999	Machine with two unsplit vibratory drums			2000 h	WX3353435
			Machine with one unsplit vibratory drum			1000 h	WX3353431
			Machine with two unsplit vibratory drums			1000 h	WX3353430
						500 h	WX3353427
			Machine with one unsplit vibratory drum			2000 h	WX3353436
HP 100i	H300	1 - 136				500 h; 1000 h	WX3199383
						2000 h	WX3199384
		137 - 9999				500 h; 1000 h	WX3353440
						2000 h	WX3353443
HC 180	H257	1 - 368				1000 h	WX3199373
						500 h	WX3199370
					50 h		WX3199368
						2000 h	WX3199377
		369 - 9999				1000 h	WX3353324
						500 h	WX3353323
					50 h		WX3353320

Due to possible technical changes, always refer to the information in the instruction manual.

MAINTENANCE PARTS

MAINTENANCE PACKAGES							
Series code	Serial code	Series range	Version	Cabin	First service	Replacement interval	Part no.
HC 180	H257	369 - 9999				2000 h	WX3353327
HC 200	H257	1 - 368				1000 h	WX3199373
						500 h	WX3199370
					50 h		WX3199368
						2000 h	WX3199377
		369 - 9999				1000 h	WX3353324
						500 h	WX3353323
					50 h		WX3353320
						2000 h	WX3353327
HC 250	H257	1 - 368				1000 h	WX3199373
						500 h	WX3199370
					50 h		WX3199368
						2000 h	WX3199377
		369 - 9999				1000 h	WX3353324
						500 h	WX3353323
					50 h		WX3353320
						2000 h	WX3353327
HC 250 VC	H257	1 - 368				1000 h	WX3199373
						500 h	WX3199370
					50 h		WX3199368
						2000 h	WX3199377
		369 - 9999				1000 h	WX3353324
						500 h	WX3353323
					50 h		WX3353320
						2000 h	WX3353327
HC 50i	H288	1 - 1516			50 h		WX3199379

Due to possible technical changes, always refer to the information in the instruction manual.

MAINTENANCE PACKAGES

Series code	Serial code	Series range	Version	Cabin	First service	Replacement interval	Part no.
HC 50i	H288	1 - 1516				2000 h	WX3199382
						500 h	WX3199380
						1000 h	WX3199381
		1517 - 9999				2000 h	WX3353034
					50 h		WX3353031
						1000 h	WX3353033
						500 h	WX3353032
HC 70i	H288	1 - 1516				500 h	WX3199380
						1000 h	WX3199381
						2000 h	WX3199382
					50 h		WX3199379
		1517 - 9999			50 h		WX3353031
						1000 h	WX3353033
						500 h	WX3353032
						2000 h	WX3353034
HD+ 70i	H301	1 - 64	Machine with two unsplit vibratory drums			1000 h	2839390
			Machine with two unsplit vibratory drums			2000 h	2410354
			Machine with one unsplit vibratory drum			2000 h	2410356
						500 h	2410353
			Machine without unsplit vibratory drum			2000 h	2410359
			Machine with one unsplit vibratory drum			1000 h	2839394

Due to possible technical changes, always refer to the information in the instruction manual.

MAINTENANCE PARTS

MAINTENANCE PACKAGES							
Series code	Serial code	Series range	Version	Cabin	First service	Replacement interval	Part no.
HD+ 70i	H301	1 - 64	Machine without unsplit vibratory drum			1000 h	2839398
		65 - 9999	Machine without unsplit vibratory drum			1000 h	WX3353345
			Machine with one unsplit vibratory drum			1000 h	WX3353344
			Machine with two unsplit vibratory drums			1000 h	WX3353343
						500 h	WX3353332
					50 h		WX3353329
			Machine without unsplit vibratory drum			2000 h	WX3353349
			Machine with two unsplit vibratory drums			2000 h	WX3353347
			Machine with one unsplit vibratory drum			2000 h	WX3353348
HD+ 80i	H301	1 - 64	Machine with two unsplit vibratory drums			1000 h	2839390
						500 h	2410353
			Machine with one unsplit vibratory drum			2000 h	2410356
			Machine with two unsplit vibratory drums			2000 h	2410354
			Machine without unsplit vibratory drum			1000 h	2839398

Due to possible technical changes, always refer to the information in the instruction manual.

MAINTENANCE PACKAGES

Series code	Serial code	Series range	Version	Cabin	First service	Replacement interval	Part no.
HD+ 80i	H301	1 - 64	Machine with one unsplit vibratory drum			1000 h	2839394
		1 - 9999	Machine without unsplit vibratory drum			2000 h	2410359
		65 - 9999			50 h		WX3353329
						500 h	WX3353332
			Machine with two unsplit vibratory drums			1000 h	WX3353343
			Machine with one unsplit vibratory drum			1000 h	WX3353344
			Machine without unsplit vibratory drum			1000 h	WX3353345
			Machine without unsplit vibratory drum			2000 h	WX3353349
			Machine with one unsplit vibratory drum			2000 h	WX3353348
			Machine with two unsplit vibratory drums			2000 h	WX3353347
HP 180	H248	1 - 65				2000 h	2651377
						1000 h	2651376
						500 h	2651374
					50 h		2651372
		66 - 328				1000 h	WX3330257
						500 h	WX3330256
					50 h		WX3330255
						2000 h	WX3330258

Due to possible technical changes, always refer to the information in the instruction manual.

MAINTENANCE PACKAGES							
Series code	Serial code	Series range	Version	Cabin	First service	Replacement interval	Part no.
HP 180	H248	329 - 9999			50 h		WX3353702
						500 h	WX3353703
						1000 h	WX3353707
						2000 h	WX3353708
HD+ 70i	H335	1 - 11	Machine with two unsplit vibratory drums			2000 h	2410354
			Machine without unsplit vibratory drum			2000 h	2410359
			Machine without unsplit vibratory drum			1000 h	2839398
			Machine with one unsplit vibratory drum			1000 h	2839394
			Machine with two unsplit vibratory drums			1000 h	2839390
						500 h	2410353
			Machine with one unsplit vibratory drum			2000 h	2410356
		12 - 9999	Machine without unsplit vibratory drum			2000 h	WX3353349
			Machine with one unsplit vibratory drum			2000 h	WX3353348
			Machine with two unsplit vibratory drums			2000 h	WX3353347
			Machine without unsplit vibratory drum			1000 h	WX3353345

MAINTENANCE PACKAGES

Series code	Serial code	Series range	Version	Cabin	First service	Replacement interval	Part no.
HD+ 70i	H335	12 - 9999	Machine with one unsplit vibratory drum			1000 h	WX3353344
			Machine with two unsplit vibratory drums			1000 h	WX3353343
					50 h		WX3353329
						500 h	WX3353332
HD+ 80i	H335	1 - 11	Machine with one unsplit vibratory drum			2000 h	2410356
			Machine with two unsplit vibratory drums			2000 h	2410354
			Machine without unsplit vibratory drum			1000 h	2839398
			Machine with one unsplit vibratory drum			1000 h	2839394
			Machine with two unsplit vibratory drums			1000 h	2839390
						500 h	2410353
			Machine without unsplit vibratory drum			2000 h	2410359
		12 - 9999	Machine without unsplit vibratory drum			2000 h	WX3353349
			Machine with one unsplit vibratory drum			2000 h	WX3353348
			Machine with two unsplit vibratory drums			2000 h	WX3353347

MAINTENANCE PACKAGES							
Series code	Serial code	Series range	Version	Cabin	First service	Replacement interval	Part no.
HD+ 80i	H335	12 - 9999	Machine without unsplit vibratory drum			1000 h	WX3353345
			Machine with one unsplit vibratory drum			1000 h	WX3353344
			Machine with two unsplit vibratory drums			1000 h	WX3353343
					50 h		WX3353329
						500 h	WX3353332
HP 180i	H334	1 - 9999			50 h		WX3330259
						2000 h	WX3330263
						1000 h	WX3330261
						500 h	WX3330260
HC 50i	H337	1 - 9999			50 h		WX3353035
						2000 h	WX3353038
						1000 h	WX3353037
						500 h	WX3353036
HC 70i	H337	1 - 9999				2000 h	WX3353038
						1000 h	WX3353037
						500 h	WX3353036
					50 h		WX3353035
HD 10 G	H309	1 - 9999			50 h		WX3330232
						500 h; 1000 h	WX3330233
						2000 h	WX3330235
HD 12 G	H309	1 - 9999			50 h		WX3330232
						500 h; 1000 h	WX3330233
						2000 h	WX3330235

Due to possible technical changes, always refer to the information in the instruction manual.

MAINTENANCE PACKAGES

Series code	Serial code	Series range	Version	Cabin	First service	Replacement interval	Part no.
HC 110	H311	1 - 89			50 h		WX3330213
						500 h	WX3330214
						1000 h	WX3330215
				without air-conditioning system		2000 h	WX3330218
				with air-conditioning system		2000 h	WX3330217
		90 - 9999			50 h		WX3353013
						500 h	WX3353015
						1000 h	WX3353016
				without air-conditioning system		2000 h	WX3353019
				with air-conditioning system		2000 h	WX3353017
HC 130	H313	1 - 6			50 h		3102804
						500 h	3102811
						1000 h	3102812
				without air-conditioning system		2000 h	WX3330165
				with air-conditioning system		2000 h	WX3330164
		7 - 9999			50 h		WX3353020
						500 h	WX3353021
						1000 h	WX3353022
				without air-conditioning system		2000 h	WX3353027
				with air-conditioning system		2000 h	WX3353023
HC 160	H313	1 - 6				500 h	3102811
				with air-conditioning system		2000 h	WX3330164
				without air-conditioning system		2000 h	WX3330165
						1000 h	3102812
					50 h		3102804
		7 - 9999				500 h	WX3353021

Due to possible technical changes, always refer to the information in the instruction manual.

MAINTENANCE PARTS

MAINTENANCE PACKAGES							
Series code	Serial code	Series range	Version	Cabin	First service	Replacement interval	Part no.
HC 160	H313	7 - 9999			50 h		WX3353020
				with air-conditioning system		2000 h	WX3353023
				without air-conditioning system		2000 h	WX3353027
						1000 h	WX3353022
HC 110	H253	1 - 9999			50 h		WX3330213
						500 h	WX3330214
				with air-conditioning system		2000 h	WX3330217
				without air-conditioning system		2000 h	WX3330218
						1000 h	WX3330215
HD 10	H336	1 - 9999				500 h; 1000 h	2410380
					50 h		2410483
						2000 h	2410386
HD 12	H336	1 - 9999				500 h; 1000 h	2410380
					50 h		2410483
						2000 h	2410386
HD+ 70	H302	1 - 201	Machine with two unsplit vibratory drums			2000 h	2410354
			Machine without unsplit vibratory drum			2000 h	2410359
			Machine without unsplit vibratory drum			1000 h	2839398
			Machine with one unsplit vibratory drum			1000 h	2839394
			Machine with two unsplit vibratory drums			1000 h	2839390
						500 h	2410353

Due to possible technical changes, always refer to the information in the instruction manual.

MAINTENANCE PACKAGES

Series code	Serial code	Series range	Version	Cabin	First service	Replacement interval	Part no.
HD+ 70	H302	1 - 201	Machine with one unsplit vibratory drum			2000 h	2410356
		202 - 9999				500 h	WX3353332
					50 h		WX3353329
			Machine without unsplit vibratory drum			2000 h	WX3353349
			Machine with one unsplit vibratory drum			2000 h	WX3353348
			Machine with two unsplit vibratory drums			2000 h	WX3353347
			Machine without unsplit vibratory drum			1000 h	WX3353345
			Machine with two unsplit vibratory drums			1000 h	WX3353343
			Machine with one unsplit vibratory drum			1000 h	WX3353344
HD+ 80	H302	1 - 201	Machine with one unsplit vibratory drum			2000 h	2410356
			Machine with two unsplit vibratory drums			2000 h	2410354
			Machine without unsplit vibratory drum			1000 h	2839398
			Machine with one unsplit vibratory drum			1000 h	2839394
			Machine with two unsplit vibratory drums			1000 h	2839390

Due to possible technical changes, always refer to the information in the instruction manual.

MAINTENANCE PARTS

MAINTENANCE PACKAGES							
Series code	Serial code	Series range	Version	Cabin	First service	Replacement interval	Part no.
HD+ 80	H302	1 - 201				500 h	2410353
			Machine without unsplit vibratory drum			2000 h	2410359
		202 - 9999	Machine without unsplit vibratory drum			2000 h	WX3353349
			Machine with one unsplit vibratory drum			2000 h	WX3353348
			Machine with two unsplit vibratory drums			2000 h	WX3353347
			Machine without unsplit vibratory drum			1000 h	WX3353345
			Machine with one unsplit vibratory drum			1000 h	WX3353344
			Machine with two unsplit vibratory drums			1000 h	WX3353343
					50 h		WX3353329
						500 h	WX3353332

LUBRICANTS

Filling or lubricating your machine with a lubricant which is specifically matched to your application is critical for the service life of the operational parts in combustion engines, hydraulic components, gear units and bearings.

WIRTGEN GROUP lubricants meet these requirements perfectly and are optimised for your WIRTGEN GROUP machine.

The best choice for ensuring the effectiveness of your machine and reducing maintenance costs long-term!

> Read more online for WIRTGEN

> Read more online for VÖGELE

> Read more online for HAMM

> Read more online for KLEEMANN

GEAR OILS

Part	Properties	Container	Part no.
Gear oil 85W-90	Mineral oil-based axle gear oil for WIRTGEN drive systems. Do not use for WIRTGEN milling drum gearboxes (except 2500 SM, 4200 SM), HAMM vibratory bearings and drum drives or VÖGELE pump splitter gearboxes and drive systems.	5 l	2065030
		20 l	2065031
		208 l	2065032
High-performance gear oil PGLP 150	Exclusive fully synthetic gear oil tailored to high-performance use in WIRTGEN milling drum gearboxes. The high wettability of the lubricant ensures that the oil adheres well to gears and thus offers excellent wear protection. Do not use for HAMM vibratory bearings and drum drives.	5 l	2173019
		20 l	199752
		208 l	2120829
High-performance gear oil PGLP 220	Exclusive fully synthetic gear oil designed for high-performance use in WIRTGEN milling drum gearboxes as well as KLEEMANN conveyor and bevel gearboxes. The high wettability of the lubricant ensures that the oil adheres well to gears and thus offers excellent wear protection. Do not use for HAMM vibratory bearings and drum drives.	5 l	2170074
		20 l	2065033
		208 l	2065034
High-performance gear oil PGLP 460	Exclusive fully synthetic gear oil tailored to high-performance use in WIRTGEN hot recyclers and in S-Pack binding agent metering units. The high wettability of the lubricant ensures that the oil adheres well to gears and thus offers excellent wear protection. Do not use for HAMM vibratory bearings and drum drives.	5 l	2461524
		20 l	2120830
Multi gear oil VG 150	Mineral oil-based industrial gear oil for KLEEMANN cone crushers. The EP (extreme pressure) additives provide exceptional wear protection. Recommended for use in KLEEMANN MCO 9 EVO and MCO 11 PRO cone crushers.	20 l	2483280
		208 l	2483281

MAINTENANCE PARTS

GEAR OILS

Part	Properties	Container	Part no.
Special gear oil	Special fully synthetic multigrade gear oil for VÖGELE pump splitter gearboxes and drive systems, HAMM vibratory bearings as well as KLEEMANN travel drives. It has excellent cold-start behaviour and offers exceptional wear protection (for example in bearings, gear wheels) and is therefore particularly suitable for demanding applications.	5 l	1238051
		20 l	2065037
		208 l	2065038
Special gear oil for roller drum drives	Special fully synthetic multigrade gear oil for HAMM roller drum drives. It has excellent cold-start behaviour and offers exceptional wear protection (for example in bearings, gear wheels) and is therefore particularly suitable for demanding applications.	5 l	2571293
		20 l	2571294
		208 l	2571300

HYDRAULIC OILS

Part	Properties	Container	Part no.
Clutch fuid HLP 32	Hydraulic oil for use in KLEEMANN clutches Suitable for low temperatures (subpolar zone).	5 l	2268030
		20 l	2268032
Hydraulic Oil HVLP 46	Multigrade hydraulic oil Suitable for moderate temperatures.	20 l	2065028
		208 l	2065029
		1000 l IBC	2118571
Hydraulic oil HVLP 68	Multigrade hydraulic oil suitable for high temperatures (subtropics, tropics).	20 l	2118574
		208 l	2570591

COOLANTS

Part	Properties	Container	Part no.
Antifreezing Compound WG30	Coolants for protection against corrosion, overheating and frost (not suitable for use in 09WR (WR 200i) or KLEEMANN machines).	5 l	2173022
		20 l	2173023
		208 l	2173024
Antifreezing Compound WG48	Coolant for KLEEMANN machines to protect against corrosion, overheating and frost.	20 l	2535933
WG40 Anti-Freeze (pink)	Coolants to protect against corrosion, overheating and frost for Mercedes Benz diesel engines installed in 09WR (WR 200i).	20 l	2555507

ENGINE OILS

Part	Properties	Container	Part no.
Engine oil low SAPS 10W-30	Semi-synthetic 'Low SAPS' engine oil (low sulphated ash, sulphur and phosphorus content) with Fuel Economy technology. Its low sulphated ash content ensures that burnt oil components do not prematurely clog the exhaust aftertreatment system's particulate filters (DPF).	5 l	2210320
		20 l	2210322
		208 l	2210323
		1000 l IBC	2118570
Engine oil low SAPS 10W-40	Synthetic low-viscosity engine oil with a comprehensive performance spectrum Fuel savings of up to 1% compared to a 15W-40 are possible. For use in markets in which low-sulphur fuel is used (e.g. Europe). Suitable for engines with exhaust gas aftertreatment (EU Stage 3b/ US EPA Tier 4i exhaust emission standard and above).	5 l	2346869
		20 l	2346870
		208 l	2346871
Engine oil low SAPS 15W-40	Mineral oil-based engine oil with higher quality base oil Meets the viscosity requirements of all WIRTGEN GROUP machines with Cummins engines. For use in markets in which low-sulphur fuel is used (e.g. Europe). Suitable for engines with exhaust gas aftertreatment (EU Stage 3b/ US EPA Tier 4i exhaust emission standard and above).	5 l	2573349
		20 l	2573350
		208 l	2573351
		1000 l IBC	2637453
Engine oil 10W-40	Synthetic low-viscosity engine oil for the longest oil change intervals For use in markets in which fuel with a higher sulphur content is used (e.g. India, China, Africa, South America). Suitable for engines without exhaust aftertreatment (up to and including EU Stage 3a/US EPA Tier 3 exhaust emission standards).	5 l	2112355
		20 l	2112354
		208 l	2219171
		1000 l IBC	2118569
Engine oil 15W-40	Mineral oil-based multigrade engine oil For use in markets where fuel with a higher sulphur content is used (for example India, China, Africa, South America). Suitable for engines without exhaust aftertreatment (up to and including EU Stage 3a/US EPA Tier 3 exhaust emission standards).	5 l	2065020
		20 l	2065025
		208 l	2065026
		1000 l IBC	2118572

GREASE

Part	Properties	Container	Part no.
Drive bearing grease	Special high-performance grease for use in HAMM bearings. Extremely pressure- and water-resistant.	1 kg	1227114

Due to possible technical changes, always refer to the information in the instruction manual.

MAINTENANCE PARTS

GREASE

Part	Properties	Container	Part no.
Drum bearing grease	Exclusive grease for the lubrication of HAMM drum bearings. Extremely temperature- and pressure-resistant.	1 kg	1205757
Friction and roller bearing grease	High-performance polyurea grease with extreme pressure resistance and excellent wear protection. For the lubrication of VÖGELE roller bearings and sliding bearings that are subject to high thermal loads as well as BENNINGHOVEN applications. Wide operating temperature range from -25 °C to +180 °C (multigrade grease).	18 kg	2027868
		400 g	WX3178176
High-performance grease	Mineral oil-based lithium complex grease with excellent wear protection. For use on couplings and WIRTGEN remixers, for example. Wide operating temperature range from -20 °C to +150 °C (multigrade grease).	400 g	47259
KLEEMANN high-performance grease	Grease for KLEEMANN screen bearings.	380 g	M10021195
Multipurpose Moly grease	Mineral oil-based grease for lubricating high-load or shock-loaded bearings in damp, unfavourable conditions. Suitable for lubrication points with mixed friction, rough surfaces and as assembly grease (for example joint pins, wheel bearings). Not suitable for ball bearings and polished surfaces. Operating temperature from -25 °C to +120 °C.	18 kg	WX3327565
		180 kg	WX3327566
		400 g	2065035
Cone Moly grease	High viscosity lithium complex grease for lubricating KLEEMANN cone crushers. Molybdenum disulphide (MoS2) grease. For heavy-duty, slow-turning bearings and bolts. Not suitable for ball bearings and polished surfaces. Operating temperature from -20 °C to +150 °C.	18 kg	2368338
		400 g	2342967

OTHER LUBRICANTS

Part	Properties	Container	Part no.
AdBlue®/DEF	32.5% high-purity urea solution according to DIN 70070 / ISO 22241. AdBlue® is a registered trademark of the Association of the Automotive Industry (Verband der Automobilindustrie e. V.; VDA)	10 l	2434706
		210 l	2090870
		1000 l	2447156
Asphalt anti-stick	The perfect solution for pneumatic tyre and combination rollers from HAMM – prevents bitumen sticking to the rubber tyres. The emulsion is based on a non-toxic solution and is therefore quickly biodegradable.	5 l	2559307
		20 l	2559309
Silicone transformer liquid	DOW transformer oil can be used for the magnetic separator on KLEEMANN machines.	20 l	2346389

BIOLOGICAL HYDRAULIC OIL			
Part	Properties	Container	Part no.
Bio Hydraulic Oil HVLP 46	Biodegradable multigrade hydraulic oil Suitable for moderate temperatures.	20 l	2118575
		208 l	2270558

Original HAMM

WATER SYSTEM

Original HAMM parts for sprinkling systems ensure that water is reliably sprayed onto the drums of the asphalt rollers. The HAMM sprinkling system for asphalt machines is optimised for use on the toughest surfaces and is designed to be extremely water-efficient. Depending on the machine type, it is possible to order and replace the individual components of the system. The complete sprinkling system has been designed for maximum reliability.

> Read more online

SPRINKLING SYSTEM PARTS

You are sure to be on the safe side with genuine HAMM sprinkling system parts from our range – reliable filtration as well as high-quality pumps, spray nozzles, seals and couplings guarantee trouble-free operation on hot asphalt.

SPRINKLING SYSTEM PARTS

Series code	Serial code	Series range	Part	Package includes	Version	Position	Part no.
HD 8	H199	1 - 9999	Water filter O-Ring				2035816
							2035815
			Spray nozzle	Colour YELLOW			1232762

SPRINKLING SYSTEM PARTS

Series code	Serial code	Series range	Part	Package includes	Version	Position	Part no.
HD 10C	H199	1 - 9999	Water filter O-Ring				2035815
							2035816
			Spray nozzle	Colour YELLOW			1232762
HD 8	H263	1 - 9999	Water filter O-Ring				2035815
							2035816
			Spray nozzle	Colour YELLOW			1232762
HD 9	H263	1 - 9999	Water filter O-Ring				2035815
							2035816
			Spray nozzle	Colour YELLOW			1232762
HD 10C	H263	1 - 9999	Water filter O-Ring				2035815
							2035816
			Spray nozzle	Colour YELLOW			1232762
HD 10	H200	1 - 9999	Water filter O-Ring				2035816
							2035815
			Spray nozzle	Colour YELLOW			1232762
	H230, H262	1 - 9999	Water filter O-Ring				2035815
							2035816
			Spray nozzle	Colour YELLOW			1232762
HD 10i	H251	1 - 9999	Water filter O-Ring				2035815
							2035816
			Spray nozzle	Colour YELLOW			1232762
HD 12	H200	1 - 9999	Water filter O-Ring				2035815
							2035816
			Spray nozzle	Colour YELLOW			1232762
	H230, H262	1 - 9999	Water filter O-Ring				2035816
							2035815

WATER SYSTEM

SPRINKLING SYSTEM PARTS							
Series code	Serial code	Series range	Part	Package includes	Version	Position	Part no.
HD 12	H230, H262	1 - 9999	Spray nozzle	Colour YELLOW			1232762
HD 12i	H251	1 - 9999	Water filter O-Ring				2035816
							2035815
			Spray nozzle	Colour YELLOW			1232762
HD 13	H201	1 - 9999	Drain cover				2031438
			Water filter O-Ring				2035816
							2035815
			Spray nozzle	Colour YELLOW			1232762
HD 13i	H231	1 - 9999	Drain cover				2031438
			Water filter O-Ring				2035816
							2035815
			Spray nozzle	Colour YELLOW			1232762
	H265, H285	1 - 9999	Drain cover				2031438
			Water filter O-Ring				2035815
							2035816
			Spray nozzle	Colour YELLOW			1232762
HD 14	H201	1 - 9999	Drain cover				2031438
			Water filter O-Ring				2035815
							2035816
			Spray nozzle	Colour YELLOW			1232762
HD 14i	H231, H265	1 - 9999	Drain cover				2031438
			Water filter O-Ring				2035816
							2035815
			Spray nozzle	Colour YELLOW			1232762
	H285	1 - 9999	Drain cover				2031438
			Water filter O-Ring				2035815

SPRINKLING SYSTEM PARTS

Series code	Serial code	Series range	Part	Package includes	Version	Position	Part no.
HD 14i	H285	1 - 9999	Water filter O-Ring				2035816
			Spray nozzle	Colour YELLOW			1232762
HD 14 TT	H208	1 - 9999	Drain cover				2031438
			Water filter O-Ring				2035815
							2035816
			Spray nozzle	Colour YELLOW			1232762
HD 30	H247	1 - 9999	Water filter O-Ring				2035816
							2035815
			Spray nozzle	Colour YELLOW			1232762
HD 35	H247	1 - 9999	Water filter O-Ring				2035815
							2035816
			Spray nozzle	Colour YELLOW			1232762
HD+ 70i	H186, H272	1 - 9999	Adapter for hose coupling				2029231
			Nozzle holder				1232770
			Water filter O-Ring				2035815
							2035816
			Hose coupling				2031621
			Complete hose coupling	Quick coupling with 1/2 " spray pipe connection			2035493
			Screen filter				1212281
			Spray nozzle	Colour YELLOW			1232762
			Complete spray nozzle assembly	Nozzle assembly pre-assembled with screen filter, nozzle and union nut			2027825
			Union nut				1212273
HD+ 80i	H186, H272	1 - 9999	Adapter for hose coupling				2029231
			Nozzle holder				1232770
			Water filter O-Ring				2035815

WATER SYSTEM

SPRINKLING SYSTEM PARTS							
Series code	Serial code	Series range	Part	Package includes	Version	Position	Part no.
HD+ 80i	H186, H272	1 - 9999	Water filter O-Ring				2035816
			Hose coupling				2031621
			Complete hose coupling	Quick coupling with 1/2 " spray pipe connection			2035493
			Screen filter				1212281
			Spray nozzle	Colour YELLOW			1232762
			Complete spray nozzle assembly	Nozzle assembly pre-assembled with screen filter, nozzle and union nut			2027825
			Union nut				1212273
HD+ 90	H185	1 - 9999	Adapter for hose coupling				2029231
			Nozzle holder				1232770
			Water filter O-Ring				2035816
							2035815
			Hose coupling				2031621
			Complete hose coupling	Quick coupling with 1/2 " spray pipe connection			2035493
			Screen filter				1212281
			Spray nozzle	Colour YELLOW			1232762
			Complete spray nozzle assembly	Nozzle assembly pre-assembled with screen filter, nozzle and union nut			2027825
			Union nut				1212273
HD+ 90i	H209	1 - 9999	Adapter for hose coupling				2029231
			Nozzle holder				1232770
			Water filter O-Ring				2035816
							2035815
			Hose coupling				2031621
			Complete hose coupling	Quick coupling with 1/2 " spray pipe connection			2035493
			Screen filter				1212281

SPRINKLING SYSTEM PARTS

Series code	Serial code	Series range	Part	Package includes	Version	Position	Part no.
HD+ 90i	H209	1 - 9999	Spray nozzle	Colour YELLOW			1232762
			Complete spray nozzle assembly	Nozzle assembly pre-assembled with screen filter, nozzle and union nut			2027825
			Union nut				1212273
HD+ 90	H258	1 - 9999	Adapter for hose coupling				2029231
			Nozzle holder				1232770
			Water filter O-Ring				2035816
							2035815
			Hose coupling				2031621
			Complete hose coupling	Quick coupling with 1/2 " spray pipe connection			2035493
			Screen filter				1212281
			Spray nozzle	Colour YELLOW			1232762
			Complete spray nozzle assembly	Nozzle assembly pre-assembled with screen filter, nozzle and union nut			2027825
			Union nut				1212273
HD+ 90i	H242	1 - 9999	Adapter for hose coupling				2029231
			Nozzle holder				1232770
			Water filter O-Ring				2035816
							2035815
			Hose coupling				2031621
			Complete hose coupling	Quick coupling with 1/2 " spray pipe connection			2035493
			Screen filter				1212281
			Spray nozzle	Colour YELLOW			1232762
			Complete spray nozzle assembly	Nozzle assembly pre-assembled with screen filter, nozzle and union nut			2027825
			Union nut				1212273

SPRINKLING SYSTEM PARTS							
Series code	Serial code	Series range	Part	Package includes	Version	Position	Part no.
HD+ 90i PH	H241, H276	1 - 9999	Adapter for hose coupling				2029231
			Nozzle holder				1232770
			Water filter O-Ring				2035815
							2035816
			Hose coupling				2031621
			Complete hose coupling	Quick coupling with 1/2 " spray pipe connection			2035493
			Screen filter				1212281
			Spray nozzle	Colour YELLOW			1232762
			Complete spray nozzle assembly	Nozzle assembly pre-assembled with screen filter, nozzle and union nut			2027825
			Union nut				1212273
HD+ 110	H185, H258	1 - 9999	Adapter for hose coupling				2029231
			Nozzle holder				1232770
			Water filter O-Ring				2035815
							2035816
			Hose coupling				2031621
			Complete hose coupling	Quick coupling with 1/2 " spray pipe connection			2035493
			Screen filter				1212281
			Spray nozzle	Colour YELLOW			1232762
			Complete spray nozzle assembly	Nozzle assembly pre-assembled with screen filter, nozzle and union nut			2027825
			Union nut				1212273
HD+ 110i	H209, H242	1 - 9999	Adapter for hose coupling				2029231
			Nozzle holder				1232770
			Water filter O-Ring				2035815
							2035816

SPRINKLING SYSTEM PARTS

Series code	Serial code	Series range	Part	Package includes	Version	Position	Part no.
HD+ 110i	H209, H242	1 - 9999	Hose coupling				2031621
			Complete hose coupling	Quick coupling with 1/2 " spray pipe connection			2035493
			Screen filter				1212281
			Spray nozzle	Colour YELLOW			1232762
			Complete spray nozzle assembly	Nozzle assembly pre-assembled with screen filter, nozzle and union nut			2027825
			Union nut				1212273
HD+ 120	H184	1 - 9999	Adapter for hose coupling				2029231
			Nozzle holder				1232770
			Water filter O-Ring				2035815
							2035816
			Hose coupling				2031621
			Complete hose coupling	Quick coupling with 1/2 " spray pipe connection			2035493
			Screen filter				1212281
			Spray nozzle	Colour YELLOW			1232762
			Complete spray nozzle assembly	Nozzle assembly pre-assembled with screen filter, nozzle and union nut			2027825
			Union nut				1212273
	H259	1 - 9999	Adapter for hose coupling				2029231
			Nozzle holder				1232770
			Water filter O-Ring				2035816
							2035815
			Hose coupling				2031621
			Complete hose coupling	Quick coupling with 1/2 " spray pipe connection			2035493
			Screen filter				1212281
			Spray nozzle	Colour YELLOW			1232762

SPRINKLING SYSTEM PARTS							
Series code	Serial code	Series range	Part	Package includes	Version	Position	Part no.
HD+ 120	H259	1 - 9999	Complete spray nozzle assembly	Nozzle assembly pre-assembled with screen filter, nozzle and union nut			2027825
			Union nut				1212273
HD+ 120i	H207, H243	1 - 9999	Adapter for hose coupling				2029231
			Nozzle holder				1232770
			Water filter O-Ring				2035815
							2035816
			Hose coupling				2031621
			Complete hose coupling	Quick coupling with 1/2 " spray pipe connection			2035493
			Screen filter				1212281
			Spray nozzle	Colour YELLOW			1232762
			Complete spray nozzle assembly	Nozzle assembly pre-assembled with screen filter, nozzle and union nut			2027825
			Union nut				1212273
	H274	1 - 9999	Adapter for hose coupling				2029231
			Nozzle holder				1232770
			Water filter O-Ring				2035816
							2035815
			Hose coupling				2031621
			Complete hose coupling	Quick coupling with 1/2 " spray pipe connection			2035493
			Screen filter				1212281
			Spray nozzle	Colour YELLOW			1232762
			Complete spray nozzle assembly	Nozzle assembly pre-assembled with screen filter, nozzle and union nut			2027825
			Union nut				1212273
HD+ 140	H184, H259	1 - 9999	Adapter for hose coupling				2029231

SPRINKLING SYSTEM PARTS

Series code	Serial code	Series range	Part	Package includes	Version	Position	Part no.
HD+ 140	H184, H259	1 - 9999	Nozzle holder				1232770
			Water filter O-Ring				2035815
							2035816
			Hose coupling				2031621
			Complete hose coupling	Quick coupling with 1/2 " spray pipe connection			2035493
			Screen filter				1212281
			Spray nozzle	Colour YELLOW			1232762
			Complete spray nozzle assembly	Nozzle assembly pre-assembled with screen filter, nozzle and union nut			2027825
			Union nut				1212273
HD+ 140i	H207	1 - 9999	Adapter for hose coupling				2029231
			Nozzle holder				1232770
			Water filter O-Ring				2035816
							2035815
			Hose coupling				2031621
			Complete hose coupling	Quick coupling with 1/2 " spray pipe connection			2035493
			Screen filter				1212281
			Spray nozzle	Colour YELLOW			1232762
			Complete spray nozzle assembly	Nozzle assembly pre-assembled with screen filter, nozzle and union nut			2027825
			Union nut				1212273
	H243, H274	1 - 9999	Adapter for hose coupling				2029231
			Nozzle holder				1232770
			Water filter O-Ring				2035815
							2035816
			Hose coupling				2031621

SPRINKLING SYSTEM PARTS							
Series code	Serial code	Series range	Part	Package includes	Version	Position	Part no.
HD+ 140i	H243, H274	1 - 9999	Complete hose coupling	Quick coupling with 1/2 " spray pipe connection			2035493
			Screen filter				1212281
			Spray nozzle	Colour YELLOW			1232762
			Complete spray nozzle assembly	Nozzle assembly pre-assembled with screen filter, nozzle and union nut			2027825
			Union nut				1212273
DV 65	H197	1 - 9999	Adapter for hose coupling				2029231
			Nozzle holder				1232770
			Replacement glass				878685
			Filter element				386596
			Felt ring				392731
			O-Ring for replacement glass				392758
			Hose coupling				2031621
			Complete hose coupling	Quick coupling with 1/2 " spray pipe connection			2035493
			Screen filter				1212281
							2028603
			Spray nozzle	Colour YELLOW			1232762
				Colour GREEN			2028605
			Complete spray nozzle assembly	Nozzle assembly pre-assembled with screen filter, nozzle and union nut	Standard		2027825
			Union nut				390313
						Additive sprinkling	1212273
			Complete water nozzle	Nozzle assembly pre-assembled with screen filter, nozzle and union nut	Oscillation		2027844
DV 70	H191	1 - 9999	Adapter for hose coupling				2029231
			Nozzle holder				1232770

SPRINKLING SYSTEM PARTS

Series code	Serial code	Series range	Part	Package includes	Version	Position	Part no.
DV 70	H191	1 - 9999	Replacement glass				878685
			Filter element				386596
			Felt ring				392731
			O-Ring for replacement glass				392758
			Hose coupling				2031621
			Complete hose coupling	Quick coupling with 1/2 " spray pipe connection			2035493
			Screen filter				2028603
							1212281
			Spray nozzle	Colour YELLOW			1232762
				Colour GREEN			2028605
			Complete spray nozzle assembly	Nozzle assembly pre-assembled with screen filter, nozzle and union nut	Standard		2027825
			Union nut				390313
						Additive sprinkling	1212273
			Complete water nozzle	Nozzle assembly pre-assembled with screen filter, nozzle and union nut	Oscillation		2027844
DV 85	H198	1 - 9999	Adapter for hose coupling				2029231
			Nozzle holder				1232770
			Replacement glass				878685
			Filter element				386596
			Felt ring				392731
			O-Ring for replacement glass				392758
			Hose coupling				2031621
			Complete hose coupling	Quick coupling with 1/2 " spray pipe connection			2035493
			Screen filter				2028603
							1212281

SPRINKLING SYSTEM PARTS							
Series code	Serial code	Series range	Part	Package includes	Version	Position	Part no.
DV 85	H198	1 - 9999	Spray nozzle	Colour GREEN			2028605
				Colour YELLOW			1232762
			Complete spray nozzle assembly	Nozzle assembly pre-assembled with screen filter, nozzle and union nut	Standard		2027825
			Union nut			Additive sprinkling	1212273
							390313
			Complete water nozzle	Nozzle assembly pre-assembled with screen filter, nozzle and union nut	Oscillation		2027844
DV 90	H192	1 - 9999	Adapter for hose coupling				2029231
			Nozzle holder				1232770
			Replacement glass				878685
			Filter element				386596
			Felt ring				392731
			O-Ring for replacement glass				392758
			Hose coupling				2031621
			Complete hose coupling	Quick coupling with 1/2 " spray pipe connection			2035493
			Screen filter				2028603
							1212281
			Spray nozzle	Colour GREEN			2028605
				Colour YELLOW			1232762
			Complete spray nozzle assembly	Nozzle assembly pre-assembled with screen filter, nozzle and union nut	Standard		2027825
			Union nut				390313
						Additive sprinkling	1212273
			Complete water nozzle	Nozzle assembly pre-assembled with screen filter, nozzle and union nut	Oscillation		2027844

SPRINKLING SYSTEM PARTS

Series code	Serial code	Series range	Part	Package includes	Version	Position	Part no.
DV+ 70i	H225	1 - 9999	Bayonet cap				2026016
			Nozzle holder				1232770
			Water filter O-Ring				2035816
							2035815
			Hose connector				2025162
			Screen filter				1212281
			Spray nozzle	Colour YELLOW			1232762
			Union nut				1212273
DV+ 90i	H226, H246	1 - 9999	Bayonet cap				2026016
			Nozzle holder				1232770
			Water filter O-Ring				2035816
							2035815
			Hose connector				2025162
			Screen filter				1212281
			Spray nozzle	Colour YELLOW			1232762
			Union nut				1212273
HW 90	H123	522 - 1034	Seal ring				293717
			Replacement glass				293598
			Filter element				280283
			Screen filter				1212281
			Spray nozzle				1212257
		1035 - 9999	Replacement glass				878685
			Filter element				386596
			Felt ring				392731
			O-Ring for replacement glass				392758
			Screen filter				1212281

WATER SYSTEM

SPRINKLING SYSTEM PARTS							
Series code	Serial code	Series range	Part	Package includes	Version	Position	Part no.
HW 90	H123	1035 - 9999	Spray nozzle				1212257
			Union nut				390313
HP 280	H249	1 - 9999	Adapter for hose coupling				2029231
			Nozzle holder				1232770
			Water filter O-Ring				2035816
							2035815
			Hose coupling				2031621
			Complete hose coupling	Quick coupling with 1/2 " spray pipe connection			2035493
			Screen filter				1212281
			Spray nozzle	Colour YELLOW			1232762
			Union nut				1212273
HP 240	H283	1 - 9999	Adapter for hose coupling				2029231
			Nozzle holder				1232770
			Water filter O-Ring				2035815
							2035816
			Hose coupling				2031621
			Complete hose coupling	Quick coupling with 1/2 " spray pipe connection			2035493
			Screen filter				1212281
			Spray nozzle	Colour YELLOW			1232762
			Union nut				1212273
HP 280i	H271	1 - 9999	Adapter for hose coupling				2029231
			Nozzle holder				1232770
			Water filter O-Ring				2035816
							2035815
			Hose coupling				2031621
			Complete hose coupling	Quick coupling with 1/2 " spray pipe connection			2035493

SPRINKLING SYSTEM PARTS

Series code	Serial code	Series range	Part	Package includes	Version	Position	Part no.
HP 280i	H271	1 - 9999	Screen filter				1212281
			Spray nozzle	Colour YELLOW			1232762
			Union nut				1212273
HP 240i	H282	1 - 9999	Adapter for hose coupling				2029231
			Nozzle holder				1232770
			Water filter O-Ring				2035816
							2035815
			Hose coupling				2031621
			Complete hose coupling	Quick coupling with 1/2 " spray pipe connection			2035493
			Screen filter				1212281
			Spray nozzle	Colour YELLOW			1232762
			Union nut				1212273
GRW 280i	H212	1 - 9999	Adapter for hose coupling				2029231
			Nozzle holder				1232770
			Water filter O-Ring				2035816
							2035815
			Hose coupling				2031621
			Complete hose coupling	Quick coupling with 1/2 " spray pipe connection			2035493
			Screen filter				1212281
			Spray nozzle	Colour YELLOW			1232762
			Union nut				1212273
	H244	1 - 9999	Adapter for hose coupling				2029231
			Nozzle holder				1232770
			Water filter O-Ring				2035815
							2035816
			Hose coupling				2031621

WATER SYSTEM

SPRINKLING SYSTEM PARTS							
Series code	Serial code	Series range	Part	Package includes	Version	Position	Part no.
GRW 280i	H244	1 - 9999	Complete hose coupling	Quick coupling with 1/2 " spray pipe connection			2035493
			Screen filter				1212281
			Spray nozzle	Colour YELLOW			1232762
			Union nut				1212273
GRW 180i	H228	1 - 9999	Adapter for hose coupling				2029231
			Nozzle holder				1232770
			Water filter O-Ring				2035816
							2035815
			Hose coupling				2031621
			Complete hose coupling	Quick coupling with 1/2 " spray pipe connection			2035493
			Screen filter				1212281
			Spray nozzle	Colour YELLOW			1232762
			Union nut				1212273
GRW 280	H195, H229	1 - 9999	Adapter for hose coupling				2029231
			Nozzle holder				1232770
			Water filter O-Ring				2035816
							2035815
			Hose coupling				2031621
			Complete hose coupling	Quick coupling with 1/2 " spray pipe connection			2035493
			Screen filter				1212281
			Spray nozzle	Colour YELLOW			1232762
			Union nut				1212273
GRW 10	H178, H190	1 - 9999	Replacement glass				878685
			Filter element				386596
			Felt ring				392731
			Spray nozzle				2045333

SPRINKLING SYSTEM PARTS

Series code	Serial code	Series range	Part	Package includes	Version	Position	Part no.
GRW 10	H178, H190	1 - 9999	Union nut				390313
GRW 15	H178, H190	1 - 9999	Replacement glass				878685
			Filter element				386596
			Felt ring				392731
			Spray nozzle				2045333
			Union nut				390313
GRW 18	H178, H190	1 - 9999	Replacement glass				878685
			Filter element				386596
			Felt ring				392731
			Spray nozzle				2045333
			Union nut				390313
GRW 21	H178, H190	1 - 9999	Replacement glass				878685
			Filter element				386596
			Felt ring				392731
			Spray nozzle				2045333
			Union nut				390313
GRW 24	H178, H190	1 - 9999	Replacement glass				878685
			Filter element				386596
			Felt ring				392731
			Spray nozzle				2045333
			Union nut				390313
HD+ 70i	H302	1 - 9999	Adapter for hose coupling				2029231
			Nozzle holder				1232770
			Water filter O-Ring				2035815
							2035816
			Hose coupling				2031621

WATER SYSTEM

SPRINKLING SYSTEM PARTS							
Series code	Serial code	Series range	Part	Package includes	Version	Position	Part no.
HD+ 70i	H302	1 - 9999	Complete hose coupling	Quick coupling with 1/2 " spray pipe connection			2035493
			Screen filter				1212281
			Spray nozzle	Colour YELLOW			1232762
			Complete spray nozzle assembly	Nozzle assembly pre-assembled with screen filter, nozzle and union nut			2027825
			Union nut				1212273
HD+ 80i	H302	1 - 9999	Adapter for hose coupling				2029231
			Nozzle holder				1232770
			Water filter O-Ring				2035816
							2035815
			Hose coupling				2031621
			Complete hose coupling	Quick coupling with 1/2 " spray pipe connection			2035493
			Screen filter				1212281
			Spray nozzle	Colour YELLOW			1232762
			Complete spray nozzle assembly	Nozzle assembly pre-assembled with screen filter, nozzle and union nut			2027825
			Union nut				1212273
HD 10 P	H336	1 - 9999	Water filter O-Ring				2035815
							2035816
			Spray nozzle	Colour YELLOW			1232762
HD 12 P	H336	1 - 9999	Water filter O-Ring				2035815
							2035816
			Spray nozzle	Colour YELLOW			1232762
HD+ 70i	H335	1 - 9999	Adapter for hose coupling				2029231
			Nozzle holder				1232770
			Water filter O-Ring				2035815

SPRINKLING SYSTEM PARTS

Series code	Serial code	Series range	Part	Package includes	Version	Position	Part no.
HD+ 70i	H335	1 - 9999	Water filter O-Ring				2035816
			Hose coupling				2031621
			Complete hose coupling	Quick coupling with 1/2 " spray pipe connection			2035493
			Screen filter				1212281
			Spray nozzle	Colour YELLOW			1232762
			Complete spray nozzle assembly	Nozzle assembly pre-assembled with screen filter, nozzle and union nut			2027825
			Union nut				1212273
HD+ 80i	H335	1 - 9999	Adapter for hose coupling				2029231
			Nozzle holder				1232770
			Water filter O-Ring				2035816
							2035815
			Hose coupling				2031621
			Complete hose coupling	Quick coupling with 1/2 " spray pipe connection			2035493
			Screen filter				1212281
			Spray nozzle	Colour YELLOW			1232762
			Complete spray nozzle assembly	Nozzle assembly pre-assembled with screen filter, nozzle and union nut			2027825
			Union nut				1212273
HP 180i	H334	1 - 9999	Spray nozzle	Colour ORANGE			2740973

Original HAMM

WATER SYSTEM

WATER FILTERS

Optimally sized filter systems protect the sprinkling system from impurities and thus ensure that the water nozzles function perfectly.

WATER FILTERS				
Series code	Serial code	Series range	Package includes	Part no.
HD 8	H199	1 - 9999		2033909
HD 10C	H199	1 - 9999		2033909
HD 8	H263	1 - 9999		2033909
HD 9	H263	1 - 9999		2033909
HD 10C	H263	1 - 9999		2033909
HD 10	H200, H230, H262	1 - 9999		2033909
HD 10i	H251	1 - 9999		2033909
HD 12	H200, H230, H262	1 - 9999		2033909
HD 12i	H251	1 - 9999		2033909
HD 13	H201	1 - 9999		2033909
HD 13i	H231, H265, H285	1 - 9999		2033909
HD 14	H201	1 - 9999		2033909
HD 14i	H231, H265, H285	1 - 9999		2033909
HD 14 TT	H208	1 - 9999		2033909
HD 30	H247	1 - 9999		2033909
HD 35	H247	1 - 9999		2033909
HD+ 70i	H186, H272	1 - 9999		2033909
HD+ 80i	H186, H272	1 - 9999		2033909
HD+ 90	H185	1 - 9999		2033909
HD+ 90i	H209	1 - 9999		2033909

WATER FILTERS

Series code	Serial code	Series range	Package includes	Part no.
HD+ 90	H258	1 - 9999		2033909
HD+ 90i	H242	1 - 9999		2033909
HD+ 90i PH	H241, H276	1 - 9999		2033909
HD+ 110	H185, H258	1 - 9999		2033909
HD+ 110i	H209, H242	1 - 9999		2033909
HD+ 120	H184, H259	1 - 9999		2033909
HD+ 120i	H207, H243, H274	1 - 9999		2033909
HD+ 140	H184, H259	1 - 9999		2033909
HD+ 140i	H207, H243, H274	1 - 9999		2033909
HD 70	H187	1 - 9999	Filter housing with filter element and pressure relief valve (pre-assembled)	813249
HD 75	H187	1 - 9999	Filter housing with filter element and pressure relief valve (pre-assembled)	813249
HD 90	H174, H181	1 - 9999	Filter housing with filter element and pressure relief valve (pre-assembled)	813249
HD 110	H174, H181	1 - 9999	Filter housing with filter element and pressure relief valve (pre-assembled)	813249
HD 120	H182	1 - 9999	Filter housing with filter element and pressure relief valve (pre-assembled)	813249
HD 130	H182	1 - 9999	Filter housing with filter element and pressure relief valve (pre-assembled)	813249
DV 65	H197	1 - 9999	Filter housing with filter element and pressure relief valve (pre-assembled)	813249
DV 70	H191	1 - 9999	Filter housing with filter element and pressure relief valve (pre-assembled)	813249
DV 85	H198	1 - 9999	Filter housing with filter element and pressure relief valve (pre-assembled)	813249
DV 90	H192	1 - 9999	Filter housing with filter element and pressure relief valve (pre-assembled)	813249
DV+ 70i	H225, H277	1 - 9999		2033909
DV+ 90i	H226, H246, H278	1 - 9999		2033909
HD 150 TT	H183, H193	1 - 9999	Filter housing with filter element and pressure relief valve (pre-assembled)	813249
HW 90	H123	522 - 1034	Filter housing with filter element and pressure relief valve (pre-assembled)	274097
		1035 - 9999	Filter housing with filter element and pressure relief valve (pre-assembled)	813249
HP 280	H249	1 - 9999		2033909
HP 240	H283	1 - 9999		2033909

WATER SYSTEM

WATER FILTERS				
Series code	Serial code	Series range	Package includes	Part no.
HP 280i	H271	1 - 9999		2033909
HP 240i	H282	1 - 9999		2033909
GRW 280i	H212, H244	1 - 9999		2033909
GRW 180i	H228	1 - 9999		2033909
GRW 280	H195, H229	1 - 9999		2033909
GRW 10	H178, H190	1 - 9999	Filter housing with filter element and pressure relief valve (pre-assembled)	813249
GRW 15	H178, H190	1 - 9999	Filter housing with filter element and pressure relief valve (pre-assembled)	813249
GRW 18	H178, H190	1 - 9999	Filter housing with filter element and pressure relief valve (pre-assembled)	813249
GRW 21	H178, H190	1 - 9999	Filter housing with filter element and pressure relief valve (pre-assembled)	813249
GRW 24	H178, H190	1 - 9999	Filter housing with filter element and pressure relief valve (pre-assembled)	813249
HD+ 70i	H302	1 - 9999		2033909
HD+ 80i	H302	1 - 9999		2033909
HD 10 P	H336	1 - 9999		2033909
HD 12 P	H336	1 - 9999		2033909
HD+ 70i	H335	1 - 9999		2033909
HD+ 80i	H335	1 - 9999		2033909
HP 180i	H334	1 - 9999		2033909

WATER PUMPS

The genuine HAMM water pump electrically maintains the sprinkling pressure of the water system.

WATER PUMPS			
Series code	Serial code	Series range	Part no.
HD 8	H199	1 - 9999	2335548
HD 10C	H199	1 - 9999	2335548
HD 8	H263	1 - 9999	2335548
HD 9	H263	1 - 9999	2335548
HD 10C	H263	1 - 9999	2335548
HD 10	H200, H230, H262	1 - 9999	2335548
HD 10i	H251	1 - 9999	2335548
HD 12	H200, H230, H262	1 - 9999	2335548
HD 12i	H251	1 - 9999	2335548
HD 13	H201	1 - 9999	2335548
HD 13i	H231, H265, H285	1 - 9999	2335548
HD 14	H201	1 - 9999	2335548
HD 14i	H231, H265, H285	1 - 9999	2335548
HD 14 TT	H208	1 - 9999	2335548
HD 30	H247	1 - 9999	2335548
HD 35	H247	1 - 9999	2335548
HD+ 70i	H186	1 - 637	2335548
HD+ 80i	H186	1 - 637	2335548
HD+ 90	H185	1 - 9999	2335548
HD+ 90i	H209, H242	1 - 9999	2335548
HD+ 90i PH	H241	1 - 9999	2335548

WATER SYSTEM

WATER PUMPS			
Series code	Serial code	Series range	Part no.
HD+ 110	H185	1 - 9999	2335548
HD+ 110i	H209, H242	1 - 9999	2335548
HD+ 120	H184	1 - 858	2335548
		859 - 9999	2245726
	H259	1 - 9999	2245726
HD+ 120i	H207, H243, H274	1 - 9999	2245726
HD+ 140	H184	1 - 858	2335548
		859 - 9999	2245726
	H259	1 - 9999	2245726
HD+ 140i	H207, H243, H274	1 - 9999	2245726
DV 65	H197	1 - 9999	2335548
DV 70	H191	1 - 9999	2335548
DV 85	H198	1 - 9999	2335548
DV 90	H192	1 - 9999	2335548
DV+ 70i	H225	1 - 9999	2335548
DV+ 90i	H226, H246	1 - 9999	2335548
HW 90	H123	1 - 9999	2335548
HP 280	H249	1 - 9999	2335548
HP 240	H283	1 - 9999	2335548
HP 280i	H271	1 - 9999	2335548
HP 240i	H282	1 - 9999	2335548
GRW 280i	H212, H244	1 - 9999	2335548
GRW 180i	H228	1 - 9999	2335548
GRW 280	H195, H229	1 - 9999	2335548
HD+ 70i	H302	1 - 9999	2615510
HD+ 80i	H302	1 - 9999	2615510
HD 10 P	H336	1 - 9999	2335548

WATER PUMPS			
Series code	Serial code	Series range	Part no.
HD 12 P	H336	1 - 9999	2335548
HD+ 70i	H335	1 - 9999	2615510
HD+ 80i	H335	1 - 9999	2615510
HP 180i	H334	1 - 9999	2335548

DRIVER KITS

These kits, which are specially equipped according to machine type, are an essential addition to any roller with a drum or tyre sprinkling system and make it possible to carry out minor repairs to the water system in no time at all.

DRIVER KITS			
Series code	Serial code	Part	Part no.
HD 70	H187	Service package for sprinkling systems	2039034
HD 75	H187	Service package for sprinkling systems	2039034
HD 90	H181	Service package for sprinkling systems	2039034
HD 110	H181	Service package for sprinkling systems	2039034
HD 120	H182	Service package for sprinkling systems	2039034
HD 130	H182	Service package for sprinkling systems	2039034
DV 65	H197	Service package for sprinkling systems	2032389
DV 70	H191	Service package for sprinkling systems	2032389
DV 85	H198	Service package for sprinkling systems	2032389
DV 90	H192	Service package for sprinkling systems	2032389
HD 150 TT	H193	Service package for sprinkling systems	2039034
HP 180i	H250	Sprinkling system driver kit	2196411
HD 10 P	H336	Sprinkling system driver kit	2047906
HD 12 P	H336	Sprinkling system driver kit	2047906

WATER SYSTEM

DRIVER KITS			
Series code	Serial code	Part	Part no.
HD+ 70i	H335	Sprinkling system driver kit	2117320
HD+ 80i	H335	Sprinkling system driver kit	2117320
HP 180i	H334	Sprinkling system driver kit	2196411

Original HAMM

SCRAPER

In daily construction site operations, original HAMM scrapers guarantee the best paving and surface quality thanks to clean drum surfaces.

The scrapers prevent dust and asphalt from adhering to the drum and tires.

The scraper materials optimized by HAMM are wear-resistant with minimal operating costs.

> Read more online

SCRAPER

The wear-resistant scrapers safely and effectively clean drums and smooth tires.

SCRAPER							
Series code	Serial code	Series range	Type	Width	Version	Position	Part no.
H 5i	H222, H270	1 - 9999	for smooth drums	1366 mm			2395899
H 7i	H222, H270	1 - 9999	for smooth drums	1676 mm			2394659
H 10i	H266, H284	1 - 9999	for smooth drums	2130 mm			2161611

SCRAPER							
Series code	Serial code	Series range	Type	Width	Version	Position	Part no.
H 11i	H211, H235, H266, H284	1 - 9999	for smooth drums	2130 mm			2161611
H 11ix	H210	1 - 9999	for smooth drums	2130 mm			2161611
H 12i	H235, H266, H284	1 - 9999	for smooth drums	2130 mm			2161611
H 13i	H211, H234, H267	1 - 9999	for smooth drums	2130 mm			2161611
H 13ix	H210	1 - 9999	for smooth drums	2130 mm			2161611
H 13i VIO	H267	1 - 9999	for smooth drums	2130 mm			2161611
H 13i C	H267	1 - 9999	for smooth drums	2130 mm			2161611
H 14i	H267	1 - 9999	for smooth drums	2130 mm			2161611
H 16i	H211, H234, H267	1 - 9999	for smooth drums	2130 mm			2161611
H 18i	H202, H233, H268	1 - 9999	for smooth drums	2130 mm			2161611
H 20i	H202, H233, H268	1 - 9999	for smooth drums	2130 mm			2161611
H 25i	H202, H233, H268	1 - 9999	for smooth drums	2130 mm			2161611
HC 180i	H256	1 - 9999	for smooth drums	2130 mm			2647682
HC 200i	H256	1 - 9999	for smooth drums	2130 mm			2647682
HC 250i	H256	1 - 9999	for smooth drums	2130 mm			2647682
3205	H188	1 - 9999	for smooth drums	1390 mm			468207
3307	H189	1 - 9999	for smooth drums	1700 mm			492280
3410	H179, H206	1 - 9999	for smooth drums	2130 mm			1499327
3411	H179, H206	1 - 9999	for smooth drums	2130 mm			1499327
3412	H180, H214	1 - 9999	for smooth drums	2130 mm			1499327
3414	H180, H214	1 - 9999	for smooth drums	2130 mm			1499327
3516	H176, H215	1 - 9999	for smooth drums	2130 mm			1499327
3518	H176, H215	1 - 9999	for smooth drums	2210 mm			1499351
3520	H176, H215	1 - 9999	for smooth drums	2210 mm			1499351
3625	H177	1 - 9999	for smooth drums	2210 mm			1499351
318	H239	1 - 9999	for smooth drums	2210 mm			1499351

SCRAPER

SCRAPER							
Series code	Serial code	Series range	Type	Width	Version	Position	Part no.
320	H239	1 - 9999	for smooth drums	2210 mm			1499351
322	H239	1 - 9999	for smooth drums	2210 mm			1499351
325	H239	1 - 9999	for smooth drums	2210 mm			1499351
HD 8	H199	1 - 9999	for smooth drums	800 mm			2033739
HD 10C	H199	1 - 9999	for tyres		PVC		2091348
			for smooth drums	1000 mm			2031269
HD 8	H263	1 - 9999	for smooth drums	800 mm			2033739
HD 9	H263	1 - 9999	for smooth drums	900 mm			2905811
HD 10C	H263	1 - 9999	for tyres		PVC		2091348
			for smooth drums	1000 mm			2031269
HD 10	H200, H262	1 - 945	for tyres		PVC		2085393
		946 - 9999	for tyres		PVC		2091348
HD 10i	H251	1 - 9999	for tyres		PVC		2091348
			for smooth drums	1000 mm			2031269
HD 12	H200	1 - 945	for tyres		PVC		2085390
		946 - 9999	for tyres		PVC		2091348
	H262	1 - 945	for tyres		PVC		2085390
		1 - 9999	for smooth drums	1200 mm			2069570
		946 - 9999	for tyres		PVC		2091348
HD 12i	H251	1 - 9999	for tyres		PVC		2091348
			for smooth drums	1200 mm			2069570
HD 13	H201	1 - 219	for tyres		PVC		2076350
		1 - 9999	for smooth drums	1300 mm			2047124
		220 - 9999	for tyres		PVC		2187115
HD 13i	H231	1 - 9999	for tyres		PVC		2187115
			for smooth drums	1300 mm			2047124

SCRAPER							
Series code	Serial code	Series range	Type	Width	Version	Position	Part no.
HD 13i	H265, H285	1 - 9999	for smooth drums	1300 mm			2047124
			for tyres		PVC		2187115
HD 14	H201	1 - 219	for tyres		PVC		2076350
		1 - 9999	for smooth drums	1380 mm			2034672
		220 - 9999	for tyres		PVC		2187115
HD 14i	H231	1 - 9999	for tyres		PVC		2187115
			for smooth drums	1380 mm			2034672
	H265, H285	1 - 9999	for smooth drums	1380 mm			2034672
			for tyres		PVC		2187115
HD 14 TT	H208	1 - 10	for tyres		PVC		2076350
		11 - 9999	for tyres		PVC		2187115
HD 30	H247	1 - 9999	for smooth drums	1000 mm			2031269
			for tyres		PVC		2091348
HD 35	H247	1 - 9999	for tyres		PVC		2091348
			for smooth drums	1200 mm			2069570
HD+ 70i	H186	1 - 9999	for smooth drums	1500 mm			2256981
			for tyres		PVC		1406248
	H272	1 - 9999	for tyres		PVC		1406248
			for smooth drums	1500 mm			2256981
HD+ 80i	H186	1 - 9999	for smooth drums	1680 mm			2129161
			for tyres		PVC		1406248
	H272	1 - 9999	for tyres		PVC		1406248
			for smooth drums	1680 mm			2129161
HD+ 90	H185	1 - 9999	for smooth drums	1680 mm			2129161
			for tyres		PVC		1406248
HD+ 90i	H209	1 - 9999	for smooth drums	1680 mm			2129161

SCRAPER

SCRAPER							
Series code	Serial code	Series range	Type	Width	Version	Position	Part no.
HD+ 90i	H209	1 - 9999	for tyres		PVC		1406248
HD+ 90	H258	1 - 9999	for smooth drums	1680 mm			2129161
			for tyres		PVC		1406248
HD+ 90i	H242	1 - 9999	for smooth drums	1680 mm			2129161
			for tyres		PVC		1406248
HD+ 90i PH	H241	1 - 9999	for smooth drums	1680 mm			2129161
			for tyres		PVC		1406248
	H276	1 - 9999	for tyres		PVC		1406248
			for smooth drums	1680 mm			2129161
HD+ 110	H185, H258	1 - 9999	for smooth drums	1680 mm			2129161
			for tyres		PVC		1406248
HD+ 110i	H209, H242	1 - 9999	for smooth drums	1680 mm			2129161
			for tyres		PVC		1406248
HD+ 120	H184	1 - 9999	for smooth drums	1980 mm			2056544
	H259	1 - 9999	for smooth drums	1980 mm			2148763
HD+ 120i	H207, H243, H274	1 - 9999	for smooth drums	1980 mm			2148763
HD+ 140	H184	1 - 9999	for smooth drums	2140 mm			2092340
	H259	1 - 9999	for smooth drums	2140 mm			2148766
HD+ 140i	H207, H243, H274	1 - 9999	for smooth drums	2140 mm			2148766
HD 70	H187	1 - 9999	for smooth drums	1500 mm			1466763
			for tyres		PVC		1406248
HD 75	H187	1 - 9999	for smooth drums	1680 mm			1461796
			for tyres		PVC		1406248
HD 90	H174, H181	1 - 9999	for smooth drums	1680 mm			1461796
			for tyres		PVC		1406248
HD 110	H174, H181	1 - 9999	for smooth drums	1680 mm			1461796

SCRAPER

Series code	Serial code	Series range	Type	Width	Version	Position	Part no.
HD 110	H174, H181	1 - 9999	for tyres		PVC		1406248
HD 120	H182	1 - 9999	for smooth drums	1980 mm			1504185
HD 130	H182	1 - 9999	for smooth drums	2140 mm			1473638
DV 65	H197	1 - 9999	for smooth drums	1520 mm			1503987
			for tyres		PVC		1406248
DV 70	H191	1 - 9999	for smooth drums	1520 mm			1503987
			for tyres		PVC		1406248
DV 85	H198	1 - 9999	for smooth drums	1700 mm			407976
			for tyres		PVC		1406248
DV 90	H192	1 - 9999	for smooth drums	1700 mm			407976
			for tyres		PVC		1406248
DV+ 70i	H225, H277	1 - 9999	for smooth drums	1500 mm			2256981
			for tyres		PVC		2171169
DV+ 90i	H226, H246, H278	1 - 9999	for tyres		PVC		2171169
			for smooth drums	1680 mm			2129161
HD 150 TT	H183, H193	1 - 9999	for tyres		PVC		1406248
HW 90	H123	1 - 9999	for smooth drums	650 mm		rear	422851
			for smooth drums	550 mm		rear	557374
			for smooth drums	1120 mm		front	557048
			for smooth drums	610 mm		rear	434795
HP 280	H249	1 - 9999	for tyres		PVC		1406248
			for tyres		PVC brush with fine insert		2545857
			for tyres		PVC brush		2545856
HP 240	H283	1 - 9999	for tyres		PVC		1406248
			for tyres		PVC brush		2545856
			for tyres		PVC brush with fine insert		2545857

SCRAPER

SCRAPER							
Series code	Serial code	Series range	Type	Width	Version	Position	Part no.
HP 280i	H271	1 - 9999	for tyres		PVC brush		2545856
			for tyres		PVC		1406248
			for tyres		PVC brush with fine insert		2545857
HP 240i	H282	1 - 9999	for tyres		PVC brush		2545856
			for tyres		PVC		1406248
			for tyres		PVC brush with fine insert		2545857
GRW 280i	H212	1 - 9999	for tyres		Wooden brush		2295331
			for tyres		PVC		1406248
	H244	1 - 9999	for tyres		PVC brush with fine insert		2545857
			for tyres		PVC brush		2545856
			for tyres		PVC		1406248
GRW 180i	H228	1 - 9999	for tyres		PVC		1406248
			for tyres		Wooden brush		2295331
GRW 280	H195	1 - 9999	for tyres		PVC		2171169
			for tyres		Wooden brush		2295331
	H229	1 - 45	for tyres		PVC		2171169
		1 - 9999	for tyres		Wooden brush		2295331
		46 - 9999	for tyres		PVC		1406248
GRW 10	H178, H190	1 - 9999	for tyres		Wooden brush		2295331
			for tyres		PVC		1406248
GRW 15	H178	1 - 9999	for tyres		PVC		1406248
			for tyres		Wooden brush		2295331
	H190	1 - 9999	for tyres		Wooden brush		2295331
			for tyres		PVC		1406248
GRW 18	H178, H190	1 - 9999	for tyres		PVC		1406248
			for tyres		Wooden brush		2295331

SCRAPER							
Series code	Serial code	Series range	Type	Width	Version	Position	Part no.
HC 100i	H252	1 - 9999	for smooth drums	2130 mm			2647682
HC 110i	H252	1 - 9999	for smooth drums	2130 mm			2647682
HC 120i	H252	1 - 9999	for smooth drums	2130 mm			2647682
HC 130i	H254	1 - 9999	for smooth drums	2130 mm			2647682
HC 140i	H254	1 - 9999	for smooth drums	2130 mm			2647682
HC 160i	H254	1 - 9999	for smooth drums	2130 mm			2647682
HC 50i	H287	1 - 9999	for smooth drums	1366 mm			2395899
HC 70i	H287	1 - 9999	for smooth drums	1676 mm			2394659
HX 70i	H297	1 - 9999	for tyres		PVC		2171169
			for smooth drums	1500 mm			2256981
HX 90i	H299	1 - 9999	for smooth drums	1680 mm			2129161
			for tyres		PVC		2171169
HD+ 110i	H303	1 - 9999	for smooth drums	1680 mm			3077516
HD+ 90i	H303	1 - 9999	for smooth drums	1680 mm			3077516
HD+ 120i	H304	1 - 9999	for smooth drums	1980 mm			3081122
HD+ 140i	H304	1 - 9999	for smooth drums	2140 mm			3081125
HP 100i	H300	1 - 9999	for tyres		PVC brush with fine insert		2545857
			for tyres		PVC		3047464
			for tyres		PVC brush		2545856
HC 180	H257	1 - 9999	for smooth drums	2130 mm			2647682
HC 200	H257	1 - 9999	for smooth drums	2130 mm			2647682
HC 250	H257	1 - 9999	for smooth drums	2130 mm			2647682
HD+ 70	H301	1 - 9999	for smooth drums	1680 mm			3077516
HD+ 80	H301	1 - 9999	for smooth drums	1680 mm			3077516
HC 50i	H288	1 - 9999	for smooth drums	1366 mm			2395899
HC 70i	H288	1 - 9999	for smooth drums	1676 mm			2394659

SCRAPER

SCRAPER							
Series code	Serial code	Series range	Type	Width	Version	Position	Part no.
HD 10e	H289	1 - 9999	for tyres		PVC		2091348
			for smooth drums	1000 mm			2031269
HD 12e	H289	1 - 9999	for tyres		PVC		2085390
			for smooth drums	1200 mm			2069570

RUBBER BUFFERS

In daily construction site use, genuine HAMM rubber buffers prevent the powerful compaction forces generated by the vibratory and oscillating drums from transmitting harmful vibrations to the roller.

Depending on the roller type, the rubber buffers are positioned either between the drum and cam or between the cam and bracket sheet.

Genuine HAMM rubber buffers ensure that the torque from the travel drive is reliably transmitted even under the toughest construction site conditions.

They provide maximum roller operator comfort with minimal maintenance costs.

> Read more online

RUBBER BUFFERS

The rubber buffers prevent harmful vibrations from being transmitted to the roller.

RUBBER BUFFERS			
Series code	Serial code	Type	Part no.
H 5i	H222, H270	for drums	1487116
H 7i	H222, H270	for drums	1487116

Original HAMM

RUBBER BUFFERS

RUBBER BUFFERS			
Series code	Serial code	Type	Part no.
H 10i	H235, H266, H284	for drums	1487116
H 11i	H211, H235, H266, H284	for drums	1487116
H 11ix	H210	for drums	1487116
H 12i	H235, H266, H284	for drums	1487116
H 13i	H211, H234, H267	for drums	1524771
H 13ix	H210	for drums	1524771
H 14i	H234, H267	for drums	1524771
H 16i	H211, H234, H267	for drums	1524771
H 18i	H202, H233, H268	for drums	1524771
H 20i	H202, H233, H268	for drums	1524771
H 25i	H202, H233, H268	for drums	1524771
H 25i VC	H238	for drums	1524771
3205	H188	for drums	1487116
3307	H189	for drums	1487116
3410	H179, H217, H221	for drums	1487116
3411	H179, H217, H221	for drums	1487116
3412	H180, H214	for drums	1524771
3414	H180, H214	for drums	1524771
3516	H176, H215	for drums	1524771
3518	H176, H215	for drums	1524771
3520	H176, H215	for drums	1524771
3625	H177	for drums	1524771
318	H239	for drums	1524771
320	H239	for drums	1524771
322	H239	for drums	1524771
325	H239	for drums	1524771
HD 8	H199	for drums	2029281

RUBBER BUFFERS			
Series code	Serial code	Type	Part no.
HD 10C	H199	for drums	2029281
HD 8	H263	for drums	2029281
HD 9	H263	for drums	2029281
HD 10C	H263	for drums	2029281
HD 10	H262	for drums	2029281
HD 10i	H251	for drums	2029281
HD 12	H262	for drums	2029281
HD 12i	H251	for drums	2029281
HD 13	H201	for drums	1487116
HD 13i	H231, H265, H285	for drums	1487116
HD 14	H201	for drums	1487116
HD 14i	H231, H265, H285	for drums	1487116
HD 30	H247	for drums	2029281
HD 35	H247	for drums	2029281
HD+ 70i	H186, H272	for drums	1487116
HD+ 80i	H186, H272	for drums	1487116
HD+ 90	H185	for drums	1487116
HD+ 90i	H209	for drums	1487116
HD+ 90	H258	for drums	1487116
HD+ 90i	H242	for drums	1487116
HD+ 90i PH	H241, H276	for drums	1487116
HD+ 110	H185, H258	for drums	1487116
HD+ 110i	H209, H242	for drums	1487116
HD+ 120	H184, H259	for drums	1524771
HD+ 120i	H207, H243, H274	for drums	1524771
HD+ 140	H184, H259	for drums	1524771
HD+ 140i	H207, H243, H274	for drums	1524771

Original HAMM

RUBBER BUFFERS

RUBBER BUFFERS			
Series code	Serial code	Type	Part no.
HD 70	H187	for drums	354082
HD 75	H187	for drums	354082
HD 90	H174, H181	for drums	354082
HD 110	H174, H181	for drums	354082
HD 120	H182	for drums	354082
HD 130	H182	for drums	354082
DV 65	H197	for drums	1487116
DV 70	H191	for drums	1487116
DV 85	H198	for drums	1487116
DV 90	H192	for drums	1487116
DV+ 70i	H225, H277	for drums	1487116
DV+ 90i	H226, H246, H278	for drums	1487116

UNDERCARRIAGE WHEEL DRIVE

Today, HAMM soil compactors achieve maximum gradeability in the most difficult terrain. At the same time, the tyres on the soil compactors are subjected to extreme stress. Genuine HAMM tyres are optimised for all conditions, guaranteeing reliable traction and the best possible handling.

The design of the tyres and rims as well as the rubber compound used are specially designed to meet the requirements of asphalt construction. The compaction effect varies depending on the air pressure of the tyres.

> Read more online

EARTHWORKS TYRES

HAMM earthworks tyres are available with different treads depending on the machine type and location of operation. For example, earthworks tyres with tractor tread are suitable for loamy and soft soils. On particularly stony soils, on the other hand, we recommend tyres with diamond tread.

EARTHWORKS TYRES			
Series code	Serial code	Version	Part no.
H 5i	H222	Diamond tread	2388996
		Tractor tread	364193
H 7i	H222	Diamond tread	2213630
		Tractor tread	355127

UNDERCARRIAGE WHEEL DRIVE

EARTHWORKS TYRES			
Series code	Serial code	Version	Part no.
H 11i	H211, H235	Tractor tread	342009
		Diamond tread	387851
H 11ix	H210	Tractor tread	342009
		Diamond tread	387851
H 12i	H235	Tractor tread	342009
		Diamond tread	387851
H 13i	H211, H234	Tractor tread	342009
		Diamond tread	387851
H 13ix	H210	Tractor tread	342009
		Diamond tread	387851
H 16i	H211, H234	Tractor tread	342009
		Diamond tread	387851
H 18i	H202	Diamond tread	387851
		Tractor tread	342009
	H233	Tractor tread	342009
		Diamond tread	387851
H 20i	H202, H233	Tractor tread	342009
		Diamond tread	387851
H 25i	H202	Tractor tread	2129836
		Diamond tread	387851
	H233	Tractor tread	2129836
3205	H188	Tractor tread	364193
		Diamond tread	2030936
3307	H189	Tractor tread	355127
		Diamond tread	2213630
3410	H179	Diamond tread	387851
		Tractor tread	342009

EARTHWORKS TYRES			
Series code	Serial code	Version	Part no.
3410	H206, H217	Tractor tread	342009
		Diamond tread	387851
3411	H179, H206, H217	Tractor tread	342009
		Diamond tread	387851
	H221	Tractor tread	7024906
		Diamond tread	7021312
3412	H180	Diamond tread	387851
		Tractor tread	342009
	H214	Tractor tread	342009
		Diamond tread	387851
3414	H180	Tractor tread	342009
		Diamond tread	387851
	H214	Diamond tread	387851
		Tractor tread	342009
3516	H176, H215	Tractor tread	342009
		Diamond tread	387851
3518	H176	Tractor tread	342009
		Diamond tread	387851
	H215	Diamond tread	387851
		Tractor tread	342009
3520	H176, H215	Tractor tread	342009
		Diamond tread	387851
3625	H177	Tractor tread	2129836
318	H239	Diamond tread	387851
		Tractor tread	342009
320	H239	Diamond tread	387851
		Tractor tread	342009

Original HAMM

UNDERCARRIAGE WHEEL DRIVE

EARTHWORKS TYRES			
Series code	Serial code	Version	Part no.
322	H239	Diamond tread	387851
		Tractor tread	342009
325	H239	Tractor tread	342009
		Diamond tread	387851

ROCK TYRES

HAMM rock tyres offer excellent traction and are characterised by their high resistance to damage. The tyres' diamond tread is particularly suitable for stony soils.

ROCK TYRES			
Series code	Serial code	Version	Part no.
H 11i	H211, H235	Option	1289926
		Standard	2071620
H 11ix	H210	Option	1289926
		Standard	2071620
H 12i	H235	Option	1289926
		Standard	2071620
H 13i	H211, H234	Option	1289926
		Standard	2071620
H 13ix	H210	Option	1289926
		Standard	2071620
H 16i	H211	Option	1289926
		Standard	2071620
	H234	Standard	2071620
		Option	1289926

ROCK TYRES			
Series code	Serial code	Version	Part no.
H 18i	H202, H233	Option	1232975
		Standard	2068866
H 20i	H202, H233	Option	1232975
		Standard	2068866
H 25i	H202, H233	Option	1232975
		Standard	2068866
H 25i VC	H238	Option	1232975
		Standard	2068866
3410	H179, H206, H217, H269	Option	1289926
		Standard	2071620
3411	H179, H206, H217, H269	Option	1289926
		Standard	2071620
3412	H180, H214	Option	1289926
		Standard	2071620
3414	H180, H214	Option	1289926
		Standard	2071620
3516	H176, H215	Option	1289926
		Standard	2071620
3518	H176	Option	1232975
		Standard	2068866
3520	H176	Option	1232975
		Standard	2068866
3625	H177	Option	1232975
		Standard	2068866

Original HAMM

UNDERCARRIAGE WHEEL DRIVE

SMOOTH TYRES

Smooth tyres for asphalt construction deliver the best compaction results.

SMOOTH TYRES				
Series code	Serial code	Series range	Version	Part no.
HD 10C	H199	1 - 5316		1270745
		5317 - 9999		2604638
HD 10	H200	1 - 9999		1270745
	H262	1 - 276		1270745
		277 - 9999		2604638
HD 10i	H251	1 - 9999		2604638
HD 12	H200	1 - 945		2080808
		946 - 2812		1270745
		2813 - 9999		2080808
	H230	1 - 1509		2080808
		1510 - 9999		2604640
	H262	1 - 348		2080808
		349 - 9999		2604640
HD 12i	H251	1 - 9999		2604640
HD 13	H201	1 - 9999		2172109
HD 13i	H231	1 - 9999		2172109
HD 14	H201	1 - 9999		2172109
HD 14i	H231	1 - 9999		2172109
HD 14 TT	H208	1 - 9999		2172109
HD 30	H247	1 - 9999		2604638

SMOOTH TYRES

Series code	Serial code	Series range	Version	Part no.
HD 35	H247	1 - 9999		2604640
HD+ 70i	H186	1 - 9999	Michelin	329096
			Dunlop	1209353
HD+ 80i	H186	1 - 9999	Michelin	329096
			Dunlop	1209353
HD+ 90	H185	1 - 9999	Michelin	329096
			Dunlop	1209353
HD+ 90i	H209	1 - 9999	Dunlop	1209353
			Michelin	329096
HD+ 90	H258	1 - 9999	Michelin	329096
			Dunlop	1209353
HD+ 90i	H242	1 - 9999	Michelin	329096
			Dunlop	1209353
HD+ 90i PH	H241	1 - 9999	Michelin	329096
			Dunlop	1209353
HD+ 110	H185, H258	1 - 9999	Dunlop	1209353
			Michelin	329096
HD+ 110i	H209, H242	1 - 9999	Michelin	329096
			Dunlop	1209353
HD 70	H187	1 - 9999	Michelin	329096
			Dunlop	1209353
HD 75	H187	1 - 9999	Michelin	329096
			Dunlop	1209353
HD 90	H174, H181	1 - 9999	Michelin	329096
			Dunlop	1209353
HD 110	H174, H181	1 - 9999	Michelin	329096

UNDERCARRIAGE WHEEL DRIVE

SMOOTH TYRES				
Series code	Serial code	Series range	Version	Part no.
HD 110	H174, H181	1 - 9999	Dunlop	1209353
DV 65	H197	1 - 9999	Michelin	329096
			Dunlop	1209353
DV 70	H191	1 - 9999	Michelin	329096
			Dunlop	1209353
DV 85	H198	1 - 9999	Michelin	329096
			Dunlop	1209353
DV 90	H192	1 - 9999	Michelin	329096
			Dunlop	1209353
DV+ 70i	H225	1 - 9999	Michelin	329096
			Dunlop	1209353
DV+ 90i	H226, H246	1 - 9999	Michelin	329096
			Dunlop	1209353
HD 150 TT	H183, H193	1 - 9999	Dunlop	1209353
			Michelin	329096
			HAMM	2301739
HP 280	H249	1 - 9999	Dunlop	1209353
			Michelin	329096
			HAMM	2301739
HP 280i	H271	1 - 9999	Dunlop	1209353
			Michelin	329096
			HAMM	2301739
GRW 280i	H212, H244	1 - 9999	Dunlop	1209353
			Michelin	329096
			HAMM	2301739
GRW 180i	H228	1 - 9999	Dunlop	1209353

SMOOTH TYRES

Series code	Serial code	Series range	Version	Part no.
GRW 180i	H228	1 - 9999	Michelin	329096
			HAMM	2301739
GRW 280	H195, H229	1 - 9999	Dunlop	1209353
			Michelin	329096
			HAMM	2301739
GRW 10	H178, H190	1 - 9999	Dunlop	1209353
			Michelin	329096
			HAMM	2301739
GRW 15	H178, H190	1 - 9999	Dunlop	1209353
			Michelin	329096
			HAMM	2301739
GRW 18	H178, H190	1 - 9999	Dunlop	1209353
			Michelin	329096
			HAMM	2301739
GRW 21	H178	1 - 9999	Dunlop	1209353
			Michelin	329096
			HAMM	2301739
	H190	1 - 9999	HAMM	2301739
			Michelin	329096
			Dunlop	1209353
GRW 24	H178, H190	1 - 9999	Dunlop	1209353
			HAMM	2301739
			Michelin	329096

Original HAMM

WINDSCREEN CLEANING

The genuine HAMM windscreen wiper system is perfectly tailored to the modern cabin concepts of HAMM rollers. Thanks to their high-performance design, the windscreen wipers ensure the operator has the best all-round visibility even in the most adverse weather conditions. The genuine HAMM windscreen wiper system is both extremely reliable and low-maintenance. The rubber parts used for the wipers are optimised for use on construction sites of all kinds. In addition to the wiper motor, wiper arms, wiper blades and nozzles are also available.

> Read more online

NOZZLES

Nozzles from HAMM are ideally sized and calibrated to efficiently clean the windscreen.

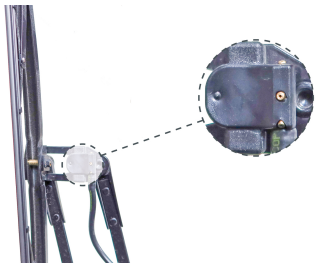

NOZZLES			
Series code	Serial code	Position	Part no.
H 10i	H235, H266, H284	rear	2292460
H 11i	H211	front; rear	2292460
	H235, H266, H284	rear	2292460
H 11ix	H210	front; rear	2292460

NOZZLES			
Series code	Serial code	Position	Part no.
H 12i	H235, H266, H284	rear	2292460
H 13i	H211	front; rear	2292460
	H234, H267	rear	2292460
H 13ix	H210	front; rear	2292460
H 14i	H234, H267	rear	2292460
H 16i	H211	front; rear	2292460
	H234, H267	rear	2292460
H 18i	H202	front; rear	2292460
	H233, H268	rear	2292460
H 20i	H202	front; rear	2292460
	H233, H268	rear	2292460
H 25i	H202	front; rear	2292460
	H233, H268	rear	2292460
H 25i VC	H238	front; rear	2292460
HD 13	H201	front; rear	2314336
HD 13i	H231, H265, H285	front; rear	2314336
HD 14	H201	front; rear	2314336
HD 14i	H231, H265, H285	front; rear	2314336

Original HAMM

WINDSCREEN CLEANING

WIPER ARMS

Wiper arms made of metal, combined with wiper blades and their rubber profile, are designed for universal use.

WIPER ARMS				
Series code	Serial code	Series range	Position	Part no.
H 5i	H222, H270	1 - 9999	rear	2465082
			front	2464968
H 7i	H222, H270	1 - 9999	rear	2465082
			front	2464968
H 10i	H235	1 - 9999	front	2606813
			rear	2294906
	H266, H284	1 - 9999	rear	2294906
			front	2606813
H 11i	H211	1 - 9999	rear	2294906
			front	2187241
	H235, H266	1 - 9999	front	2606813
			rear	2294906
	H284	1 - 9999	rear	2294906
			front	2606813
H 11ix	H210	1 - 9999	rear	2294906
			front	2187241
H 12i	H235, H266, H284	1 - 9999	front	2606813
			rear	2294906
H 13i	H211	1 - 9999	rear	2294906
			front	2187241

WIPER ARMS

Series code	Serial code	Series range	Position	Part no.
H 13i	H234, H267	1 - 9999	front	2606813
			rear	2294906
H 13ix	H210	1 - 9999	rear	2294906
			front	2187241
H 14i	H234, H267	1 - 9999	front	2606813
			rear	2294906
H 16i	H211	1 - 9999	rear	2294906
			front	2187241
	H234, H267	1 - 9999	front	2606813
			rear	2294906
H 18i	H202	1 - 9999	rear	2294906
			front	2187241
	H233, H268	1 - 9999	front	2606813
			rear	2294906
H 20i	H202	1 - 9999	rear	2294906
			front	2187241
	H233, H268	1 - 9999	front	2606813
			rear	2294906
H 25i	H202	1 - 9999	rear	2294906
			front	2187241
	H233, H268	1 - 9999	front	2606813
			rear	2294906
H 25i VC	H238	1 - 9999	rear	2294906
			front	2187241
3410	H179	1 - 1224	rear	2073692
			front	1272152

WINDSCREEN CLEANING

WIPER ARMS				
Series code	Serial code	Series range	Position	Part no.
3410	H206, H217	1 - 9999	front	2187241
			rear	2073692
3411	H179	1 - 1224	rear	2073692
			front	1272152
	H206, H217	1 - 9999	front	2187241
			rear	2073692
3412	H180	1 - 1365	front	1272152
		1 - 9999	rear	2073692
		1366 - 9999	front	2187241
	H214	1 - 9999	front	2187241
			rear	2073692
3414	H180	1 - 1365	front	1272152
		1 - 9999	rear	2073692
		1366 - 9999	front	2187241
	H214	1 - 9999	front	2187241
			rear	2073692
HD 13	H201	1 - 9999	front	2315165
			rear	2314580
HD 13i	H231, H265	1 - 9999	front	2315165
			rear	2314580
	H285	1 - 9999	rear	2314580
			front	2315165
HD 14	H201	1 - 9999	rear	2314580
			front	2315165
HD 14i	H231	1 - 9999	rear	2314580
			front	2315165

WIPER ARMS

Series code	Serial code	Series range	Position	Part no.
HD 14i	H265	1 - 9999	front	2315165
			rear	2314580
	H285	1 - 9999	rear	2314580
			front	2315165
HD+ 70i	H186	1 - 9999	rear left	2135308
			front	2135317
			rear right	2135313
	H272	1 - 9999	rear left	2135308
			rear right	2135313
			front	2135317
HD+ 80i	H186	1 - 9999	rear right	2135313
			front	2135317
			rear left	2135308
	H272	1 - 9999	rear right	2135313
			rear left	2135308
			front	2135317
HD+ 90	H185	1 - 9999	front	2135317
			rear right	2135313
			rear left	2135308
HD+ 90i	H209	1 - 9999	front	2135317
			rear right	2135313
			rear left	2135308
HD+ 90	H258	1 - 9999	rear left	2135308
			front	2135317
			rear right	2135313
HD+ 90i	H242	1 - 9999	front	2135317

WINDSCREEN CLEANING

WIPER ARMS				
Series code	Serial code	Series range	Position	Part no.
HD+ 90i	H242	1 - 9999	rear left	2135308
			rear right	2135313
HD+ 90i PH	H241	1 - 9999	rear right	2135313
			rear left	2135308
			front	2135317
HD+ 110	H185	1 - 9999	rear left	2135308
			front	2135317
			rear right	2135313
	H258	1 - 9999	rear right	2135313
			front	2135317
			rear left	2135308
HD+ 110i	H209, H242	1 - 9999	rear right	2135313
			front	2135317
			rear left	2135308
HD+ 120	H184	1 - 9999	front	2135321
			rear right	2135313
			rear left	2135308
	H259	1 - 9999	front	2135321
			rear left	2135308
			rear right	2135313
HD+ 120i	H207	1 - 9999	rear left	2135308
			rear right	2135313
			front	2135321
	H243	1 - 9999	rear left	2135308
			front	2135321
			rear right	2135313

WIPER ARMS

Series code	Serial code	Series range	Position	Part no.
HD+ 120i	H274	1 - 9999	rear left	2135308
			rear right	2135313
			front	2135321
HD+ 140	H184, H259	1 - 9999	rear left	2135308
			front	2135321
			rear right	2135313
HD+ 140i	H207, H243	1 - 9999	rear left	2135308
			front	2135321
			rear right	2135313
	H274	1 - 9999	rear right	2135313
			front	2135321
			rear left	2135308
HD 70	H187	1 - 9999	front	1249371
			rear	1249150
HD 75	H187	1 - 9999	front	1249371
			rear	1249150
HD 90	H174, H181	1 - 9999	front	1249371
			rear	1249150
HD 110	H174, H181	1 - 9999	front	1249371
			rear	1249150
HD 120	H182	1 - 9999	front	1249371
			rear	1249150
HD 130	H182	1 - 9999	front	1249371
			rear	1249150
DV 65	H197	1 - 9999	front; rear	2035371
DV 70	H191	1 - 9999	front; rear	2035371

WINDSCREEN CLEANING

WIPER ARMS				
Series code	Serial code	Series range	Position	Part no.
DV 85	H198	1 - 9999	front; rear	2035371
DV 90	H192	1 - 9999	front; rear	2035371
DV+ 70i	H225, H277	1 - 9999	front left; rear right	2473406
			front right; rear left	2470398
DV+ 90i	H226, H246	1 - 9999	front right; rear left	2470338
			front left; rear right	2470336
	H278	1 - 9999	front left; rear right	2470336
			front right; rear left	2470338
HD 150 TT	H183, H193	1 - 9999	front	1249371
			rear	1249150
HW 90	H123	1 - 9999	front	2501726
			rear	207683
HP 280	H249	1 - 9999	front right	2641687
			rear	2641693
			front left	2641690
HP 240	H283	1 - 9999	front right	2641687
			front left	2641690
			rear	2641693
HP 280i	H271	1 - 9999	front right	2641687
			rear	2641693
			front left	2641690
HP 240i	H282	1 - 9999	front right	2641687
			rear	2641693
			front left	2641690
GRW 280i	H212	1 - 9999	rear left	2162358
			front	2264973

WIPER ARMS				
Series code	Serial code	Series range	Position	Part no.
GRW 280i	H212	1 - 9999	rear right	2162363
	H244	1 - 9999	front right	2641687
			rear	2641693
			front left	2641690
GRW 180i	H228	1 - 9999	rear left	2162358
			front	2264973
			rear right	2162363
GRW 280	H195	1 - 238	front	2135321
		1 - 9999	rear left	2162358
			rear right	2162363
		239 - 9999	front	2264973
	H229	1 - 9999	rear left	2162358
			front	2264973
			rear right	2162363
GRW 10	H178	1 - 9999	front; rear	2501726
	H190	1 - 9999	front; rear	2501726
GRW 15	H178	1 - 9999	front; rear	2501726
	H190	1 - 9999	front; rear	2501726
GRW 18	H178	1 - 9999	front; rear	2501726
	H190	1 - 9999	front; rear	2501726

Original HAMM

WINDSCREEN CLEANING

WIPER BLADES

The wiper blades can be fitted quickly and easily.

WIPER BLADES				
Series code	Serial code	Series range	Position	Part no.
H 5i	H222, H270	1 - 9999	front	2464970
			rear	2465084
H 7i	H222, H270	1 - 9999	front	2464970
			rear	2465084
H 10i	H235	1 - 9999	front	2606816
			rear	2073691
	H266	1 - 9999	rear	2073691
			front	2606816
	H284	1 - 9999	front	2606816
			rear	2073691
H 11i	H211	1 - 9999	rear	2073691
			front	2294908
	H235	1 - 9999	front	2606816
			rear	2073691
	H266, H284	1 - 9999	rear	2073691
			front	2606816
H 11ix	H210	1 - 9999	front	2294908
			rear	2073691
H 12i	H235, H266	1 - 9999	rear	2073691
			front	2606816

WIPER BLADES

Series code	Serial code	Series range	Position	Part no.
H 12i	H284	1 - 9999	front	2606816
			rear	2073691
H 13i	H211	1 - 9999	rear	2073691
			front	2294908
	H234	1 - 9999	rear	2073691
			front	2606816
	H267	1 - 9999	front	2606816
			rear	2073691
H 13ix	H210	1 - 9999	rear	2073691
			front	2294908
H 14i	H234, H267	1 - 9999	rear	2073691
			front	2606816
H 16i	H211	1 - 9999	rear	2073691
			front	2294908
	H234	1 - 9999	rear	2073691
			front	2606816
	H267	1 - 9999	front	2606816
			rear	2073691
H 18i	H202	1 - 9999	front	2294908
			rear	2073691
	H233, H268	1 - 9999	rear	2073691
			front	2606816
H 20i	H202	1 - 9999	front	2294908
			rear	2073691
	H233	1 - 9999	rear	2073691
			front	2606816

WINDSCREEN CLEANING

WIPER BLADES				
Series code	Serial code	Series range	Position	Part no.
H 20i	H268	1 - 9999	front	2606816
			rear	2073691
H 25i	H202	1 - 9999	front	2294908
			rear	2073691
	H233	1 - 9999	rear	2073691
			front	2606816
	H268	1 - 9999	front	2606816
			rear	2073691
H 25i VC	H238	1 - 9999	front	2294908
			rear	2073691
3516	H176, H215	1 - 9999	front	1272187
			rear	2073691
3518	H176	1 - 9999	rear	2073691
			front	1272187
	H215	1 - 9999	front	1272187
			rear	2073691
3520	H176, H215	1 - 9999	front	1272187
			rear	2073691
3625	H177	1 - 9999	front	1272187
			rear	2073691
HD 13	H201	1 - 9999	rear	2314360
			front	1249169
HD 13i	H231	1 - 9999	rear	2314360
			front	1249169
	H265	1 - 9999	front	1249169
			rear	2314360

WIPER BLADES

Series code	Serial code	Series range	Position	Part no.
HD 13i	H285	1 - 9999	rear	2314360
			front	1249169
HD 14	H201	1 - 9999	rear	2314360
			front	1249169
HD 14i	H231	1 - 9999	front	1249169
			rear	2314360
	H265, H285	1 - 9999	rear	2314360
			front	1249169
HD+ 70i	H186, H272	1 - 9999	front	2135320
			rear	2135311
HD+ 80i	H186, H272	1 - 9999	rear	2135311
			front	2135320
HD+ 90	H185	1 - 9999	front	2135320
			rear	2135311
HD+ 90i	H209	1 - 9999	front	2135320
			rear	2135311
HD+ 90	H258	1 - 9999	rear	2135311
			front	2135320
HD+ 90i	H242	1 - 9999	front	2135320
			rear	2135311
HD+ 90i PH	H241	1 - 9999	rear	2135311
			front	2135320
	H276	1 - 9999	front	2135320
			rear	2135311
HD+ 110	H185, H258	1 - 9999	rear	2135311
			front	2135320

WINDSCREEN CLEANING

WIPER BLADES				
Series code	Serial code	Series range	Position	Part no.
HD+ 110i	H209, H242	1 - 9999	rear	2135311
			front	2135320
HD+ 120	H184, H259	1 - 9999	rear	2135311
			front	2135320
HD+ 120i	H207, H243, H274	1 - 9999	rear	2135311
			front	2135320
HD+ 140	H184, H259	1 - 9999	rear	2135311
			front	2135320
HD+ 140i	H207	1 - 9999	front	2135320
			rear	2135311
	H243, H274	1 - 9999	rear	2135311
			front	2135320
HD 70	H187	1 - 9999	rear	1249169
			front	1249398
HD 75	H187	1 - 9999	front	1249398
			rear	1249169
HD 90	H174	1 - 9999	rear	1249169
			front	1249398
	H181	1 - 9999	front	1249398
			rear	1249169
HD 110	H174	1 - 9999	front	1249398
			rear	1249169
	H181	1 - 9999	rear	1249169
			front	1249398
HD 120	H182	1 - 9999	rear	1249169
			front	1249398

WIPER BLADES

Series code	Serial code	Series range	Position	Part no.
HD 130	H182	1 - 9999	front	1249398
			rear	1249169
DV 65	H197	1 - 9999	front; rear	2035372
DV 70	H191	1 - 9999	front; rear	2035372
DV 85	H198	1 - 9999	front; rear	2035372
DV 90	H192	1 - 9999	front; rear	2035372
DV+ 70i	H225, H277	1 - 9999	front left; rear right	1249169
			front right; rear left	2471086
DV+ 90i	H226, H246, H278	1 - 9999	front; rear	2471086
HD 150 TT	H183, H193	1 - 9999	rear	1249169
			front	1249398
HW 90	H123	1 - 9999	rear	224901
			front	385999
HP 280	H249	1 - 9999	rear	2135311
			front	2641686
HP 240	H283	1 - 9999	front	2641686
			rear	2135311
HP 280i	H271	1 - 9999	front	2641686
			rear	2135311
HP 240i	H282	1 - 9999	front	2641686
			rear	2135311
GRW 280i	H212	1 - 9999	rear	2162361
			front	2264972
	H244	1 - 9999	front	2641686
			rear	2135311
GRW 180i	H228	1 - 9999	rear	2162361

Original HAMM

WINDSCREEN CLEANING

WIPER BLADES				
Series code	Serial code	Series range	Position	Part no.
GRW 180i	H228	1 - 9999	front	2264972
GRW 280	H195	1 - 238	rear	2162361
			front	2135320
		239 - 9999	front	2264972
			rear	2264975
	H229	1 - 9999	rear	2162361
			front	2264972
GRW 10	H178, H190	1 - 9999	front; rear	385999
GRW 15	H178, H190	1 - 9999	front; rear	385999
GRW 18	H178, H190	1 - 9999	front; rear	385999

WIPER MOTORS

The high-performance wiper motor reliably controls the wiper arms even in heavy rain.

WIPER MOTORS				
Series code	Serial code	Series range	Position	Part no.
H 5i	H222	1 - 9999	rear	2465074
			front	2464966
	H270	1 - 9999	front	2464966
			rear	2465074
H 7i	H222, H270	1 - 9999	front	2464966
			rear	2465074

WIPER MOTORS

Series code	Serial code	Series range	Position	Part no.
H 10i	H235	1 - 9999	rear	2294905
			front	2606817
	H266	1 - 9999	front	2606817
			rear	2294905
	H284	1 - 9999	rear	2294905
			front	2606817
H 11i	H211	1 - 9999	front	2294910
			rear	2294905
	H235	1 - 9999	rear	2294905
			front	2606817
	H266, H284	1 - 9999	front	2606817
			rear	2294905
H 11ix	H210	1 - 9999	front	2294910
			rear	2294905
H 12i	H235, H266	1 - 9999	rear	2294905
			front	2606817
	H284	1 - 9999	front	2606817
			rear	2294905
H 13i	H211	1 - 9999	rear	2294905
			front	2294910
	H234	1 - 9999	rear	2294905
			front	2606817
	H267	1 - 9999	front	2606817
			rear	2294905
H 13ix	H210	1 - 9999	front	2294910
			rear	2294905

WINDSCREEN CLEANING

WIPER MOTORS				
Series code	Serial code	Series range	Position	Part no.
H 14i	H234	1 - 9999	front	2606817
			rear	2294905
	H267	1 - 9999	rear	2294905
			front	2606817
H 16i	H211	1 - 9999	front	2294910
			rear	2294905
	H234, H267	1 - 9999	rear	2294905
			front	2606817
H 18i	H202	1 - 9999	front	2294910
			rear	2294905
	H233	1 - 9999	front	2606817
			rear	2294905
	H268	1 - 9999	rear	2294905
			front	2606817
H 20i	H202	1 - 9999	rear	2294905
			front	2294910
	H233, H268	1 - 9999	rear	2294905
			front	2606817
H 25i	H202	1 - 9999	rear	2294905
			front	2294910
	H233	1 - 9999	rear	2294905
			front	2606817
	H268	1 - 9999	front	2606817
			rear	2294905
H 25i VC	H238	1 - 9999	front	2294910
			rear	2294905

WIPER MOTORS

Series code	Serial code	Series range	Position	Part no.
3205	H188	1 - 52	rear	1270044
			front	1270036
		53 - 9999	front	2187419
			rear	2187516
3307	H189	1 - 246	front	1270036
			rear	1270044
		247 - 9999	rear	2187516
			front	2187419
3410	H179	1225 - 9999	front	2187419
			rear	2187516
3411	H179	1225 - 9999	rear	2187516
			front	2187419
HD 13	H201	1 - 9999	front; rear	2243012
HD 13i	H231, H265, H285	1 - 9999	front; rear	2243012
HD 14	H201	1 - 9999	front; rear	2243012
HD 14i	H231, H265, H285	1 - 9999	front; rear	2243012
HD+ 70i	H186	1 - 9999	front	2135318
			rear right	2132778
			rear left	2132774
	H272	1 - 9999	rear right	2132778
			front	2135318
			rear left	2132774
HD+ 80i	H186	1 - 9999	front	2135318
			rear right	2132778
			rear left	2132774
	H272	1 - 9999	rear left	2132774

WIPER MOTORS				
Series code	Serial code	Series range	Position	Part no.
HD+ 80i	H272	1 - 9999	front	2135318
			rear right	2132778
HD+ 90	H185	1 - 9999	rear left	2132774
			rear right	2132778
			front	2135318
HD+ 90i	H209	1 - 9999	rear right	2132778
			rear left	2132774
			front	2135318
HD+ 90	H258	1 - 9999	rear right	2132778
			rear left	2132774
			front	2135318
HD+ 90i	H242	1 - 9999	rear left	2132774
			rear right	2132778
			front	2135318
HD+ 90i PH	H241, H276	1 - 9999	rear left	2132774
			rear right	2132778
			front	2135318
HD+ 110	H185	1 - 9999	rear left	2132774
			rear right	2132778
			front	2135318
	H258	1 - 9999	front	2135318
			rear left	2132774
			rear right	2132778
HD+ 110i	H209	1 - 9999	rear left	2132774
			rear right	2132778
			front	2135318

WIPER MOTORS

Series code	Serial code	Series range	Position	Part no.
HD+ 110i	H242	1 - 9999	rear left	2132774
			front	2135318
			rear right	2132778
HD+ 120	H184, H259	1 - 9999	rear left	2132774
			rear right	2132778
			front	2132775
HD+ 120i	H207, H243	1 - 9999	rear left	2132774
			rear right	2132778
			front	2132775
	H274	1 - 9999	front	2132775
			rear right	2132778
			rear left	2132774
HD+ 140	H184, H259	1 - 9999	rear left	2132774
			rear right	2132778
			front	2132775
HD+ 140i	H207	1 - 9999	rear left	2132774
			rear right	2132778
			front	2132775
	H243	1 - 9999	rear right	2132778
			front	2132775
			rear left	2132774
	H274	1 - 9999	front	2132775
			rear right	2132778
			rear left	2132774
HD 70	H187	1 - 9999	front	1247484
			rear	1247476

WINDSCREEN CLEANING

WIPER MOTORS				
Series code	Serial code	Series range	Position	Part no.
HD 75	H187	1 - 9999	front	1247484
			rear	1247476
HD 90	H174, H181	1 - 9999	front	1247484
			rear	1247476
HD 110	H174, H181	1 - 9999	front	1247484
			rear	1247476
HD 120	H182	1 - 9999	front	1247484
			rear	1247476
HD 130	H182	1 - 9999	front	1247484
			rear	1247476
DV 65	H197	1 - 9999	front; rear	2034533
DV 70	H191	1 - 9999	front; rear	2034533
DV 85	H198	1 - 9999	front; rear	2034533
DV 90	H192	1 - 9999	front; rear	2034533
DV+ 70i	H225, H277	1 - 9999	front; rear	2471084
DV+ 90i	H226, H246, H278	1 - 9999	front; rear	2471084
HD 150 TT	H183, H193	1 - 9999	front	1247484
			rear	1247476
HW 90	H123	1 - 9999	rear	534250
			front	356956
HP 280	H249	1 - 9999	rear	2641694
			front	2641692
HP 240	H283	1 - 9999	rear	2641694
			front	2641692
HP 280i	H271	1 - 9999	rear	2641694
			front	2641692

WIPER MOTORS				
Series code	Serial code	Series range	Position	Part no.
HP 240i	H282	1 - 9999	front	2641692
			rear	2641694
GRW 280i	H212	1 - 9999	rear right	2162359
			front	2264974
			rear left	2162364
	H244	1 - 9999	rear	2641694
			front	2641692
GRW 180i	H228	1 - 9999	front	2264974
			rear right	2162359
			rear left	2162364
GRW 280	H195	1 - 238	front	2132775
		1 - 9999	rear left	2162364
			rear right	2162359
		239 - 9999	front	2264974
	H229	1 - 9999	rear right	2162359
			front	2264974
			rear left	2162364
GRW 10	H178, H190	1 - 9999	front; rear	356956
GRW 15	H178, H190	1 - 9999	front; rear	356956
GRW 18	H178, H190	1 - 9999	front; rear	356956

Original HAMM

LIGHTING

The genuine HAMM lighting system makes it possible to safely operate our rollers on construction sites at night. The robust design of the headlights enables them to be used safely even under the toughest construction site conditions. Lighting components are made of weatherproof and temperature-resistant material. In addition to the usual headlights and tail lights, HAMM also offers indicator lights, position lights and the corresponding bulbs.

> Read more online

DRUM LIGHTING

HAMM drum lights specifically illuminate the entire working area.

DRUM LIGHTING					
Series code	Serial code	Series range	Version	Position	Part no.
HD+ 70i	H186, H272	1 - 9999	LED	front; rear	2339317
HD+ 80i	H186, H272	1 - 9999	LED	front; rear	2339317
HD+ 90	H185	1 - 9999	LED	front; rear	2339317

DRUM LIGHTING

Series code	Serial code	Series range	Version	Position	Part no.
HD+ 90i	H209	1 - 9999	LED	front; rear	2339317
			Halogen	front; rear	330647
HD+ 90	H258	1 - 9999	LED	front; rear	2339317
HD+ 90i	H242	1 - 9999	LED	front; rear	2339317
			Halogen	front; rear	330647
	H241	1 - 9999	LED	front; rear	2339317
HD+ 90i PH	H241, H276	1 - 9999	LED	front; rear	2339317
HD+ 110	H185, H258	1 - 9999	LED	front; rear	2339317
HD+ 110i	H209	1 - 9999	LED	front; rear	2339317
			Halogen	front; rear	330647
	H242	1 - 9999	Halogen	front; rear	330647
			LED	front; rear	2339317
HD+ 110i PH	H241	1 - 9999	LED	front; rear	2339317
HD+ 120	H184	1 - 9999	LED	front; rear	2339317
	H259	1 - 9999	LED	front; rear	2339317
			Halogen	front; rear	330647
HD+ 120i	H207, H243, H274	1 - 9999	LED	front; rear	2339317
			Halogen	front; rear	330647
HD+ 140	H184	1 - 9999	LED	front; rear	2339317
	H259	1 - 9999	LED	front; rear	2339317
			Halogen	front; rear	330647
HD+ 140i	H207	1 - 9999	LED	front; rear	2339317
			Halogen	front; rear	330647
	H243, H274	1 - 9999	Halogen	front; rear	330647
			LED	front; rear	2339317
DV 65	H197	1 - 9999	Halogen	front; rear	330647

Original HAMM

LIGHTING

DRUM LIGHTING

Series code	Serial code	Series range	Version	Position	Part no.
DV 70	H191	1 - 9999	Halogen	front; rear	330647
DV 85	H198	1 - 9999	Halogen	front; rear	330647
DV 90	H192	1 - 9999	Halogen	front; rear	330647
DV+ 70i	H225	1 - 9999	Halogen	front; rear	330647
			LED	front; rear	2339317
	H277	1 - 9999	LED	front; rear	2339317
			Halogen	front; rear	330647
DV+ 90i	H226	1 - 9999	LED	front; rear	2339317
			Halogen	front; rear	330647
	H246, H278	1 - 9999	Halogen	front; rear	330647
			LED	front; rear	2339317

POSITION LIGHTS

HAMM's practical position lights ensure that the machine's outline is always visible, even in complete darkness.

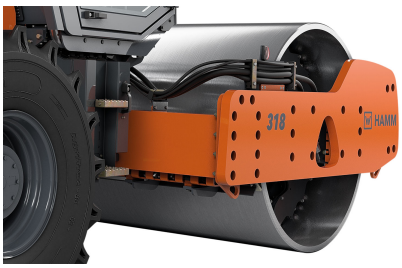

POSITION LIGHTS

Series code	Serial code	Position	Part no.
3410	H179, H206	front left	2029166
		front right	2029266
	H217, H221	front right	2029266
		front left	2029166
3411	H179	front left	2029166
		front right	2029266

POSITION LIGHTS

Series code	Serial code	Position	Part no.
3411	H206, H217	front right	2029266
		front left	2029166
	H221	front left	2029166
		front right	2029266
3412	H180, H214	front right	2029266
		front left	2029166
3414	H180	front left	2029166
		front right	2029266
	H214	front right	2029266
		front left	2029166
3516	H176	front right	2029266
		front left	2029166
	H215	front left	2029166
		front right	2029266
3518	H176, H215	front right	2029266
		front left	2029166
3520	H176	front left	2029166
		front right	2029266
	H215	front right	2029266
		front left	2029166
3625	H177	front left	2029166
		front right	2029266
318	H239	front	2444119
320	H239	front	2444119
322	H239	front	2444119
325	H239	front	2444119
GRW 10	H178	front left	2029166

LIGHTING

POSITION LIGHTS			
Series code	Serial code	Position	Part no.
GRW 10	H178	front right	2029266
	H190	front right	2029266
		front left	2029166
GRW 15	H178, H190	front left	2029166
		front right	2029266
GRW 18	H178	front right	2029266
		front left	2029166
	H190	front left	2029166
		front right	2029266
GRW 21	H178, H190	front right	2029266
		front left	2029166
GRW 24	H178	front right	2029266
		front left	2029166
	H190	front left	2029166
		front right	2029266

INDICATOR LIGHTS

HAMM indicator lights are used to clearly and reliably indicate changes of direction.

INDICATOR LIGHTS				
Series code	Serial code	Series range	Position	Part no.
3205	H188	1 - 9999	rear	311685
3307	H189	1 - 9999	rear	311685

INDICATOR LIGHTS

Series code	Serial code	Series range	Position	Part no.
3410	H179, H206, H217, H221	1 - 9999	rear	311685
3411	H179, H206, H217, H221	1 - 9999	rear	311685
3412	H180, H214	1 - 9999	rear	311685
3414	H180, H214	1 - 9999	rear	311685
3516	H176, H215	1 - 9999	rear	311685
3518	H176, H215	1 - 9999	rear	311685
3520	H176, H215	1 - 9999	rear	311685
3625	H177	1 - 9999	rear	311685
318	H239	1 - 9999	rear	2374208
320	H239	1 - 9999	rear	2374208
322	H239	1 - 9999	rear	2374208
325	H239	1 - 9999	rear	2374208
HD 8	H199	1 - 9999	front	2030858
HD 10C	H199	1 - 9999	front	2030858
HD 8	H263	1 - 9999	front	2030858
HD 9	H263	1 - 9999	front	2030858
HD 10C	H263	1 - 9999	front	2030858
HD 10	H262	1 - 9999	front	2030858
HD 10i	H251	1 - 9999	front	2030858
HD 12	H262	1 - 9999	front	2030858
HD 12i	H251	1 - 9999	front	2030858
HD 13	H201	1 - 9999	front	2030858
HD 13i	H231, H265, H285	1 - 9999	front	2030858
HD 14	H201	1 - 9999	front	2030858
HD 14i	H231, H265, H285	1 - 9999	front	2030858
HD 14 TT	H208	1 - 9999	front	2030858

INDICATOR LIGHTS				
Series code	Serial code	Series range	Position	Part no.
HD 30	H247	1 - 9999	front	2030858
HD 35	H247	1 - 9999	front	2030858
HD+ 70i	H186, H272	1 - 9999	front	2142234
HD+ 80i	H186, H272	1 - 9999	front	2142234
HD+ 90	H185	1 - 9999	front	2142234
HD+ 90i	H209	1 - 9999	front	2142234
HD+ 90	H258	1 - 9999	front	2142234
HD+ 90i	H242	1 - 9999	front	2142234
HD+ 90i PH	H241, H276	1 - 9999	front	2142234
HD+ 110	H185, H258	1 - 9999	front	2142234
HD+ 110i	H209, H242	1 - 9999	front	2142234
HD+ 120	H184	1 - 243	front left	2066214
			front right	2066215
		244 - 9999	front	2142234
	H259	1 - 9999	front	2142234
HD+ 120i	H207, H243, H274	1 - 9999	front	2142234
HD+ 140	H184	1 - 243	front right	2066215
			front left	2066214
		244 - 9999	front	2142234
	H259	1 - 9999	front	2142234
HD+ 140i	H207, H243, H274	1 - 9999	front	2142234
HD 70	H187	1 - 9999	front; rear	311685
HD 75	H187	1 - 9999	front; rear	311685
HD 90	H174, H181	1 - 9999	front; rear	311685
HD 110	H174, H181	1 - 9999	front; rear	311685
HD 120	H182	1 - 9999	front; rear	311685

INDICATOR LIGHTS

Series code	Serial code	Series range	Position	Part no.
HD 130	H182	1 - 9999	front; rear	311685
DV 65	H197	1 - 9999	front; rear	311685
DV 70	H191	1 - 9999	front; rear	311685
DV 85	H198	1 - 9999	front; rear	311685
DV 90	H192	1 - 9999	front; rear	311685
DV+ 70i	H225, H277	1 - 9999	front	2142234
DV+ 90i	H226, H246, H278	1 - 9999	front	2142234
HD 150 TT	H183, H193	1 - 9999	front; rear	311685
HW 90	H123	1 - 9999	front	230375
HP 280	H249	1 - 9999	front	2142251
HP 240	H283	1 - 9999	front	2142251
HP 280i	H271	1 - 9999	front	2142251
HP 240i	H282	1 - 9999	front	2142251
GRW 280i	H212, H244	1 - 9999	front	2142251
GRW 180i	H228	1 - 9999	front	2142251
GRW 280	H195, H229	1 - 9999	front	2142251

REVERSING LIGHTS

HAMM's reversing lights not only benefit the driver by illuminating the area, they also signal to others that the machine is reversing.

REVERSING LIGHTS				
Series code	Serial code	Series range	Position	Part no.
H 5i	H222, H270	1 - 9999	rear	2030859
H 7i	H222, H270	1 - 9999	rear	2030859
H 10i	H266, H284	1 - 9999	rear	2030859
H 11i	H211, H235, H266, H284	1 - 9999	rear	2030859
H 11ix	H210	1 - 9999	rear	2030859
H 12i	H235, H266, H284	1 - 9999	rear	2030859
H 13i	H211, H234, H267	1 - 9999	rear	2030859
H 13ix	H210	1 - 9999	rear	2030859
H 13i VIO	H267	1 - 9999	rear	2030859
H 13i C	H267	1 - 9999	rear	2030859
H 14i	H267	1 - 9999	rear	2030859
H 16i	H211, H234, H267	1 - 9999	rear	2030859
H 18i	H202, H233, H268	1 - 9999	rear	2030859
H 20i	H202, H233, H268	1 - 9999	rear	2030859
H 25i	H202, H233, H268	1 - 9999	rear	2030859
H 25i VC	H238	1 - 9999	rear	2030859
3205	H188	1 - 9999	rear	398225
3307	H189	1 - 9999	rear	398225
3410	H179, H206, H217, H221	1 - 9999	rear	398225
3411	H179, H206, H217, H221	1 - 9999	rear	398225

REVERSING LIGHTS

Series code	Serial code	Series range	Position	Part no.
3412	H180, H214	1 - 9999	rear	398225
3414	H180, H214	1 - 9999	rear	398225
3516	H176, H215	1 - 9999	rear	398225
3518	H176, H215	1 - 9999	rear	398225
3520	H176, H215	1 - 9999	rear	398225
3625	H177	1 - 9999	rear	398225
318	H239	1 - 9999	rear	398225
			rear	2374269
320	H239	1 - 9999	rear	398225
			rear	2374269
322	H239	1 - 9999	rear	398225
			rear	2374269
325	H239	1 - 9999	rear	398225
			rear	2374269
HD 8	H199	1 - 9999	rear	398225
			rear	2030859
HD 10C	H199	1 - 9999	rear	398225
			rear	2030859
HD 8	H263	1 - 9999	rear	2030859
			rear	398225
HD 10C	H263	1 - 9999	rear	2030859
			rear	398225
HD 10	H262	1 - 9999	rear	398225
			rear	2030859
HD 10i	H251	1 - 9999	rear	398225
			rear	2030859

REVERSING LIGHTS				
Series code	Serial code	Series range	Position	Part no.
HD 12	H262	1 - 9999	rear	2030859
			rear	398225
HD 12i	H251	1 - 9999	rear	2030859
			rear	398225
HD 13	H201	1 - 9999	rear	2030859
			rear	398225
HD 13i	H231, H265	1 - 9999	rear	2030859
			rear	398225
HD 14	H201	1 - 9999	rear	2030859
			rear	398225
HD 14i	H231	1 - 9999	rear	2030859
			rear	398225
	H285	1 - 9999	rear	398225
			rear	2030859
HD 14 TT	H208	1 - 9999	rear	398225
			rear	2030859
HD 30	H247	1 - 9999	rear	398225
			rear	2030859
HD 35	H247	1 - 9999	rear	398225
			rear	2030859
HD+ 70i	H186, H272	1 - 9999	rear	2025134
HD+ 80i	H186, H272	1 - 9999	rear	2025134
HD+ 90	H185	1 - 9999	rear	2025134
HD+ 90i	H209	1 - 9999	rear	2025134
HD+ 90	H258	1 - 9999	rear	2025134
HD+ 90i	H242	1 - 9999	rear	2025134

REVERSING LIGHTS

Series code	Serial code	Series range	Position	Part no.
HD+ 90i PH	H241, H276	1 - 9999	rear	2025134
HD+ 110	H185, H258	1 - 9999	rear	2025134
HD+ 110i	H209, H242	1 - 9999	rear	2025134
HD+ 120	H184	1 - 243	rear	2025134
		244 - 9999	rear	2025134
	H259	1 - 9999	rear	2025134
HD+ 120i	H207, H243, H274	1 - 9999	rear	2025134
HD+ 140	H184	1 - 243	rear	2025134
		244 - 9999	rear	2025134
	H259	1 - 9999	rear	2025134
HD+ 140i	H207, H243, H274	1 - 9999	rear	2025134
HD 70	H187	1 - 9999	rear	398225
HD 75	H187	1 - 9999	rear	398225
HD 90	H174, H181	1 - 9999	rear	398225
HD 110	H174, H181	1 - 9999	rear	398225
HD 120	H182	1 - 9999	rear	398225
HD 130	H182	1 - 9999	rear	398225
DV 65	H197	1 - 9999	rear	2025134
DV 70	H191	1 - 9999	rear	2025134
DV 85	H198	1 - 9999	rear	2025134
DV 90	H192	1 - 9999	rear	2025134
DV+ 70i	H225, H277	1 - 9999	rear	2025134
DV+ 90i	H226, H246, H278	1 - 9999	rear	2025134
HD 150 TT	H183, H193	1 - 9999	rear	398225
HW 90	H123	1 - 9999	rear	230286
			rear	221074

REVERSING LIGHTS				
Series code	Serial code	Series range	Position	Part no.
HP 280	H249	1 - 9999	rear	2025134
			rear	2030859
HP 240	H283	1 - 9999	rear	2025134
			rear	2030859
HP 280i	H271	1 - 9999	rear	2030859
			rear	2025134
HP 240i	H282	1 - 9999	rear	2030859
			rear	2025134
GRW 280i	H212, H244	1 - 9999	rear	2030859
			rear	2025134
GRW 180i	H228	1 - 9999	rear	2030859
			rear	2025134
GRW 280	H195	1 - 9999	rear	2030859
			rear	2025134
	H229	1 - 9999	rear	2025134
			rear	2030859
GRW 10	H178	1 - 9999	rear	221074
			rear	230286
	H190	1 - 9999	rear	230286
			rear	221074
GRW 15	H178, H190	1 - 9999	rear	221074
			rear	230286
GRW 18	H178	1 - 9999	rear	230286
			rear	221074
	H190	1 - 9999	rear	221074
			rear	230286

REVERSING LIGHTS				
Series code	Serial code	Series range	Position	Part no.
GRW 21	H178, H190	1 - 9999	rear	221074
			rear	230286
GRW 24	H178	1 - 9999	rear	230286
			rear	221074
	H190	1 - 9999	rear	221074
			rear	230286

HEADLIGHTS

The headlights are characterised by their vibration resistance and long service life.

HEADLIGHTS					
Series code	Serial code	Series range	Position	Version	Part no.
H 5i	H222, H270	1 - 9999	front right		2173317
			front left		2173316
H 7i	H222, H270	1 - 9999	front right		2173317
			front left		2173316
H 10i	H266, H284	1 - 9999	front right		2173317
			front left		2173316
H 11i	H211, H235, H266, H284	1 - 9999	front right		2173317
			front left		2173316
H 11ix	H210	1 - 9999	front right		2173317
			front left		2173316

HEADLIGHTS					
Series code	Serial code	Series range	Position	Version	Part no.
H 12i	H235	1 - 9999	front right		2173317
			front left		2173316
	H266, H284	1 - 9999	front left		2173316
			front right		2173317
H 13i	H211, H234, H267	1 - 9999	front right		2173317
			front left		2173316
H 13ix	H210	1 - 9999	front right		2173317
			front left		2173316
H 13i VIO	H267	1 - 9999	front right		2173317
			front left		2173316
H 13i C	H267	1 - 9999	front left		2173316
			front right		2173317
H 14i	H267	1 - 9999	front right		2173317
			front left		2173316
H 16i	H211, H234	1 - 9999	front right		2173317
			front left		2173316
	H267	1 - 9999	front left		2173316
			front right		2173317
H 18i	H202, H233, H268	1 - 9999	front right		2173317
			front left		2173316
H 20i	H202, H233, H268	1 - 9999	front right		2173317
			front left		2173316
H 25i	H202, H233, H268	1 - 9999	front right		2173317
			front left		2173316
H 25i VC	H238	1 - 9999	front right		2173317
			front left		2173316

HEADLIGHTS

Series code	Serial code	Series range	Position	Version	Part no.
HC 180i	H256	1 - 9999	front left		2852810
			front right		2852813
HC 200i	H256	1 - 9999	front right		2852813
			front left		2852810
HC 250i	H256	1 - 9999	front left		2852810
			front right		2852813
HC 250i VC	H256	1 - 9999	front right		2852813
			front left		2852810
3205	H188	1 - 9999	front left		1266985
			front; rear	Operator's cabin	1272209
			front right		1266993
3307	H189	1 - 9999	front left		1266985
			front; rear	Operator's cabin	1272209
			front right		1266993
3410	H179, H206, H217, H221	1 - 9999	front left		1266985
			front; rear	Operator's cabin	1272209
			front right		1266993
3411	H179, H206, H217, H221	1 - 9999	front left		1266985
			front; rear	Operator's cabin	1272209
			front right		1266993
3412	H180, H214	1 - 9999	front left		1266985
			front; rear	Operator's cabin	1272209
			front right		1266993
3414	H180, H214	1 - 9999	front left		1266985
			front; rear	Operator's cabin	1272209
			front right		1266993

HEADLIGHTS					
Series code	Serial code	Series range	Position	Version	Part no.
3516	H176, H215	1 - 9999	front left		1266985
			front; rear	Operator's cabin	1272209
			front right		1266993
3518	H176	1 - 9999	front left		1266985
			front; rear	Operator's cabin	1272209
			front right		1266993
	H215	1 - 9999	front right		1266993
			front; rear	Operator's cabin	1272209
			front left		1266985
3520	H176	1 - 9999	front; rear	Operator's cabin	1272209
			front right		1266993
			front left		1266985
	H215	1 - 9999	front right		1266993
			front; rear	Operator's cabin	1272209
			front left		1266985
3625	H177	1 - 9999	front right		1266993
			front; rear	Operator's cabin	1272209
			front left		1266985
318	H239	1 - 9999	front left		2370740
			front right		2370741
320	H239	1 - 9999	front right		2370741
			front left		2370740
322	H239	1 - 9999	front left		2370740
			front right		2370741
325	H239	1 - 9999	front left		2370740
			front right		2370741

HEADLIGHTS

Series code	Serial code	Series range	Position	Version	Part no.
HD 8	H199	1 - 9999	front		2030857
HD 10C	H199	1 - 9999	front		2030857
HD 8	H263	1 - 246	front		2030857
HD 9	H263	1 - 246	front		2030857
HD 10C	H263	1 - 246	front		2030857
HD 10	H262	1 - 9999	front		2030857
HD 10i	H251	1 - 2225	front		2030857
HD 12	H262	1 - 2225	front		2030857
HD 12i	H251	1 - 160	front		2030857
HD 13	H201	1 - 5784	front		2030857
HD 13i	H231, H265, H285	1 - 9999	front		2030857
HD 14	H201	1 - 5784	front		2030857
HD 14i	H231, H265, H285	1 - 9999	front		2030857
HD 14 TT	H208	1 - 9999	front		2030857
HD 30	H247	1 - 9999	front		2030857
HD 35	H247	1 - 9999	front		2030857
HD+ 70i	H186, H272	1 - 9999	front; rear		2030857
HD+ 80i	H186, H272	1 - 9999	front; rear		2030857
HD+ 90	H185	1 - 9999	front; rear		2030857
HD+ 90i	H209	1 - 9999	front; rear		2030857
HD+ 90	H258	1 - 9999	front; rear		2030857
HD+ 90i	H242	1 - 9999	front; rear		2030857
HD+ 90i PH	H241, H276	1 - 9999	front; rear		2030857
HD+ 110	H185, H258	1 - 9999	front; rear		2030857
HD+ 110i	H209, H242	1 - 9999	front; rear		2030857
HD+ 120	H184	1 - 243	rear		2060918

HEADLIGHTS					
Series code	Serial code	Series range	Position	Version	Part no.
HD+ 120	H184	1 - 243	front		2065584
		244 - 9999	front; rear		2030857
	H259	1 - 9999	front; rear		2030857
HD+ 120i	H207, H243, H274	1 - 9999	front; rear		2030857
HD+ 140	H184	1 - 243	rear		2060918
			front		2065584
		244 - 9999	front; rear		2030857
	H259	1 - 9999	front; rear		2030857
HD+ 140i	H207, H243, H274	1 - 9999	front; rear		2030857
HD 70	H187	1 - 9999	front; rear	Operator's cabin	385077
			front		388483
			rear		385085
HD 75	H187	1 - 9999	front; rear	Operator's cabin	385077
			front		388483
			rear		385085
HD 90	H174, H181	1 - 9999	front; rear	Operator's cabin	385077
			front		388483
			rear		385085
HD 110	H174, H181	1 - 9999	front; rear	Operator's cabin	385077
			front		388483
			rear		385085
HD 120	H182	1 - 9999	front; rear	Operator's cabin	385077
			front		388483
			rear		385085
HD 130	H182	1 - 9999	front; rear	Operator's cabin	385077
			front		388483

HEADLIGHTS

Series code	Serial code	Series range	Position	Version	Part no.
HD 130	H182	1 - 9999	rear		385085
DV 65	H197	1 - 9999	front; rear	Operator's cabin	2035376
			front		388483
			rear		385085
DV 70	H191	1 - 9999	front; rear	Operator's cabin	2035376
			front		388483
			rear		385085
DV 85	H198	1 - 9999	front; rear	Operator's cabin	2035376
			front		388483
			rear		385085
DV 90	H192	1 - 9999	front; rear	Operator's cabin	2035376
			front		388483
			rear		385085
DV+ 70i	H225, H277	1 - 9999	front; rear		2030857
DV+ 90i	H226, H246, H278	1 - 9999	front; rear		2030857
HD 150 TT	H183, H193	1 - 9999	front; rear	Operator's cabin	385077
			front		388483
			rear		385085
HW 90	H123	1 - 9999	front		346349
			rear		207500
HP 280	H249	1 - 9999	front		2030857
HP 240	H283	1 - 9999	front		2030857
HP 280i	H271	1 - 9999	front		2030857
HP 240i	H282	1 - 9999	front		2030857
GRW 280i	H212, H244	1 - 9999	front		2030857
GRW 180i	H228	1 - 9999	front		2030857

LIGHTING

HEADLIGHTS

Series code	Serial code	Series range	Position	Version	Part no.
GRW 280	H195, H229	1 - 9999	front		2030857
GRW 10	H178, H190	1 - 9999	front; rear		311987
GRW 15	H178, H190	1 - 9999	front; rear		311987
GRW 18	H178, H190	1 - 9999	front; rear		311987
GRW 21	H178, H190	1 - 9999	front; rear		311987
GRW 24	H178, H190	1 - 9999	front; rear		311987

TAIL LIGHTS

HAMM tail lights increase safety on the construction site by improving the visibility of the rollers.

TAIL LIGHTS

Series code	Serial code	Series range	Position	Part no.
H 5i	H222, H270	1 - 9999	rear	2030860
H 7i	H222, H270	1 - 9999	rear	2030860
H 10i	H266, H284	1 - 9999	rear	2030860
H 11i	H211, H235, H266, H284	1 - 9999	rear	2030860
H 11ix	H210	1 - 9999	rear	2030860
H 12i	H235, H266, H284	1 - 9999	rear	2030860
H 13i	H211, H234, H267	1 - 9999	rear	2030860
H 13ix	H210	1 - 9999	rear	2030860
H 13i VIO	H267	1 - 9999	rear	2030860
H 13i C	H267	1 - 9999	rear	2030860

TAIL LIGHTS

Series code	Serial code	Series range	Position	Part no.
H 14i	H267	1 - 9999	rear	2030860
H 16i	H211, H234, H267	1 - 9999	rear	2030860
H 18i	H202, H233, H268	1 - 9999	rear	2030860
H 20i	H202, H233, H268	1 - 9999	rear	2030860
H 25i	H202, H233, H268	1 - 9999	rear	2030860
H 25i VC	H238	1 - 9999	rear	2030860
HC 180i	H256	1 - 9999	rear	2643872
HC 200i	H256	1 - 9999	rear	2643872
HC 250i	H256	1 - 9999	rear	2643872
HC 250i VC	H256	1 - 9999	rear	2643872
3205	H188	1 - 9999	rear	330639
3307	H189	1 - 9999	rear	330639
3410	H179, H206, H217, H221	1 - 9999	rear	330639
3411	H179, H206, H217, H221	1 - 9999	rear	330639
3412	H180, H214	1 - 9999	rear	330639
3414	H180, H214	1 - 9999	rear	330639
3516	H176, H215	1 - 9999	rear	330639
3518	H176, H215	1 - 9999	rear	330639
3520	H176, H215	1 - 9999	rear	330639
3625	H177	1 - 9999	rear	330639
HD 8	H199	1 - 9999	rear	2030860
HD 10C	H199	1 - 9999	rear	2030860
HD 8	H263	1 - 9999	rear	2030860
HD 9	H263	1 - 9999	rear	2030860
HD 10C	H263	1 - 9999	rear	2030860
HD 10	H262	1 - 9999	rear	2030860

TAIL LIGHTS				
Series code	Serial code	Series range	Position	Part no.
HD 10i	H251	1 - 9999	rear	2030860
HD 12	H262	1 - 9999	rear	2030860
HD 12i	H251	1 - 9999	rear	2030860
HD 13	H201	1 - 9999	rear	2030860
HD 13i	H231, H265, H285	1 - 9999	rear	2030860
HD 14	H201	1 - 9999	rear	2030860
HD 14i	H231, H265, H285	1 - 9999	rear	2030860
HD 14 TT	H208	1 - 9999	rear	2030860
HD 30	H247	1 - 9999	rear	2030860
HD 35	H247	1 - 9999	rear	2030860
HD+ 70i	H186, H272	1 - 9999	rear	2030860
HD+ 80i	H186, H272	1 - 9999	rear	2030860
HD+ 90	H185	1 - 9999	rear	2030860
HD+ 90i	H209	1 - 9999	rear	2030860
HD+ 90	H258	1 - 9999	rear	2030860
HD+ 90i	H242	1 - 9999	rear	2030860
HD+ 90i PH	H241, H276	1 - 9999	rear	2030860
HD+ 110	H185, H258	1 - 9999	rear	2030860
HD+ 110i	H209, H242	1 - 9999	rear	2030860
HD+ 120	H184	1 - 243	rear right	2060713
			rear left	2060712
		244 - 9999	rear	2030860
	H259	1 - 9999	rear	2030860
HD+ 120i	H207, H243, H274	1 - 9999	rear	2030860
HD+ 140	H184	1 - 243	rear right	2060713
			rear left	2060712

TAIL LIGHTS

Series code	Serial code	Series range	Position	Part no.
HD+ 140	H184	244 - 9999	rear	2030860
	H259	1 - 9999	rear	2030860
HD+ 140i	H207, H243, H274	1 - 9999	rear	2030860
HD 70	H187	1 - 9999	rear	330639
HD 75	H187	1 - 9999	rear	330639
HD 90	H174, H181	1 - 9999	rear	330639
HD 110	H174, H181	1 - 9999	rear	330639
HD 120	H182	1 - 9999	rear	330639
HD 130	H182	1 - 9999	rear	330639
DV 65	H197	1 - 9999	rear	330639
DV 70	H191	1 - 9999	rear	330639
DV 85	H198	1 - 9999	rear	330639
DV 90	H192	1 - 9999	rear	330639
DV+ 70i	H225, H277	1 - 9999	rear	2030860
DV+ 90i	H226, H246, H278	1 - 9999	rear	2030860
HD 150 TT	H183, H193	1 - 9999	rear	330639
HP 280	H249	1 - 9999	rear	2030860
HP 240	H283	1 - 9999	rear	2030860
HP 280i	H271	1 - 9999	rear	2030860
HP 240i	H282	1 - 9999	rear	2030860
GRW 280i	H212, H244	1 - 9999	rear	2030860
GRW 180i	H228	1 - 9999	rear	2030860
GRW 280	H195, H229	1 - 9999	rear	2030860

Original HAMM

TELEMATICS

WITOS, the telematics system from the WIRTGEN GROUP, offers an optimised package of solutions to increase your productivity on the job site. The intelligent WITOS FleetView telematics system from the WIRTGEN GROUP supports fleet and service management for machines from WIRTGEN, VÖGELE, HAMM and KLEEMANN. Thanks to the system-supported processing, transmission, visualisation and evaluation of machine and position data, fleet and service management becomes even more efficient during day-to-day operations. With WITOS FleetView, you can keep track of your fleet of machines at all times.

> Read more online

WITOS FLEETVIEW

WITOS FleetView fleet management gives you a permanent overview of the condition of your machines.

WITOS FleetView is not available in all countries and for all model series – please contact your local sales and service company if you have any questions.

WITOS FLEETVIEW					
Series code	Serial code	Series range	Part	Package includes	Part no.
H 5i	H222, H270	10 - 9999	WITOS FleetView retrofit kit	incl. cable set	2408617
H 7i	H222, H270	10 - 9999	WITOS FleetView retrofit kit	incl. cable set	2408617

WITOS FLEETVIEW

Series code	Serial code	Series range	Part	Package includes	Part no.
H 10i	H235, H266, H284	10 - 9999	WITOS FleetView retrofit kit	incl. cable set	2384218
H 11i	H211	10 - 88	WITOS FleetView retrofit kit	incl. cable set	2356998
		89 - 9999	WITOS FleetView retrofit kit	incl. cable set	2355425
	H235, H266, H284	10 - 9999	WITOS FleetView retrofit kit	incl. cable set	2384218
H 11ix	H210	10 - 9999	WITOS FleetView retrofit kit	incl. cable set	2355425
H 12i	H235, H266, H284	10 - 9999	WITOS FleetView retrofit kit	incl. cable set	2384218
H 13i	H211	10 - 88	WITOS FleetView retrofit kit	incl. cable set	2356998
		89 - 9999	WITOS FleetView retrofit kit	incl. cable set	2355425
	H234, H267	10 - 9999	WITOS FleetView retrofit kit	incl. cable set	2384218
H 13ix	H210	10 - 9999	WITOS FleetView retrofit kit	incl. cable set	2355425
H 14i	H234, H267	10 - 9999	WITOS FleetView retrofit kit	incl. cable set	2384218
H 16i	H211	10 - 88	WITOS FleetView retrofit kit	incl. cable set	2356998
		89 - 9999	WITOS FleetView retrofit kit	incl. cable set	2355425
	H234, H267	10 - 9999	WITOS FleetView retrofit kit	incl. cable set	2384218
H 18i	H202	10 - 47	WITOS FleetView retrofit kit	incl. cable set	2356998
		48 - 9999	WITOS FleetView retrofit kit	incl. cable set	2355425
	H233	10 - 9999	WITOS FleetView retrofit kit	incl. cable set	2384218
H 20i	H202	10 - 47	WITOS FleetView retrofit kit	incl. cable set	2356998
		48 - 9999	WITOS FleetView retrofit kit	incl. cable set	2355425
	H233	10 - 9999	WITOS FleetView retrofit kit	incl. cable set	2384218
H 25i	H202	10 - 47	WITOS FleetView retrofit kit	incl. cable set	2356998
		48 - 9999	WITOS FleetView retrofit kit	incl. cable set	2355425
	H233	10 - 9999	WITOS FleetView retrofit kit	incl. cable set	2384218
H 25i VC	H238	10 - 9999	WITOS FleetView retrofit kit	incl. cable set	2355425
3410	H179, H206, H217	10 - 9999	WITOS FleetView retrofit kit	incl. cable set	2480523
	H221	10 - 9999	WITOS FleetView retrofit kit	incl. cable set	2590606

WITOS FLEETVIEW					
Series code	Serial code	Series range	Part	Package includes	Part no.
3410	H269	10 - 9999	WITOS FleetView retrofit kit	incl. cable set	2480523
3411	H179, H206, H217	10 - 9999	WITOS FleetView retrofit kit	incl. cable set	2480523
	H221	10 - 9999	WITOS FleetView retrofit kit	incl. cable set	2590606
	H269	10 - 9999	WITOS FleetView retrofit kit	incl. cable set	2480523
3412	H180, H214	10 - 9999	WITOS FleetView retrofit kit	incl. cable set	2480523
3414	H180, H214	10 - 9999	WITOS FleetView retrofit kit	incl. cable set	2480523
3516	H176, H215	10 - 9999	WITOS FleetView retrofit kit	incl. cable set	2480523
3518	H176, H215	10 - 9999	WITOS FleetView retrofit kit	incl. cable set	2480523
3520	H176, H215	10 - 9999	WITOS FleetView retrofit kit	incl. cable set	2480523
3625	H177	10 - 9999	WITOS FleetView retrofit kit	incl. cable set	2480523
HD 8	H199	10 - 9999	WITOS FleetView retrofit kit	incl. cable set	2480633
HD 10C	H199	10 - 9999	WITOS FleetView retrofit kit	incl. cable set	2480633
HD 8	H263	10 - 9999	WITOS FleetView retrofit kit	incl. cable set	2480633
HD 9	H263	10 - 9999	WITOS FleetView retrofit kit	incl. cable set	2480633
HD 10C	H263	10 - 9999	WITOS FleetView retrofit kit	incl. cable set	2480633
HD 10	H200, H230, H262	10 - 9999	WITOS FleetView retrofit kit	incl. cable set	2480632
HD 10i	H251	10 - 9999	WITOS FleetView retrofit kit	incl. cable set	2558581
HD 12	H200, H230, H262	10 - 9999	WITOS FleetView retrofit kit	incl. cable set	2480632
HD 12i	H251	10 - 9999	WITOS FleetView retrofit kit	incl. cable set	2558581
HD 13	H201	10 - 9999	WITOS FleetView retrofit kit	incl. cable set	2467085
HD 13i	H231, H265, H285	10 - 9999	WITOS FleetView retrofit kit	incl. cable set	2490841
HD 14	H201	10 - 9999	WITOS FleetView retrofit kit	incl. cable set	2467085
HD 14i	H231, H265, H285	10 - 9999	WITOS FleetView retrofit kit	incl. cable set	2490841
HD 14 TT	H208	10 - 9999	WITOS FleetView retrofit kit	incl. cable set	2467085
HD+ 70i	H186	10 - 191	WITOS FleetView retrofit kit	incl. cable set	2426598
		192 - 9999	WITOS FleetView retrofit kit	incl. cable set	2545527

WITOS FLEETVIEW

Series code	Serial code	Series range	Part	Package includes	Part no.
HD+ 70i	H272	10 - 9999	WITOS FleetView retrofit kit	incl. cable set	2545527
HD+ 80i	H186	10 - 191	WITOS FleetView retrofit kit	incl. cable set	2426598
		192 - 9999	WITOS FleetView retrofit kit	incl. cable set	2545527
	H272	10 - 9999	WITOS FleetView retrofit kit	incl. cable set	2545527
HD+ 90	H185	10 - 9999	WITOS FleetView retrofit kit	incl. cable set	2467062
HD+ 90i	H209	10 - 257	WITOS FleetView retrofit kit	incl. cable set	2426598
		258 - 9999	WITOS FleetView retrofit kit	incl. cable set	2545527
HD+ 90	H258	10 - 9999	WITOS FleetView retrofit kit	incl. cable set	2617372
HD+ 90i	H242	10 - 9999	WITOS FleetView retrofit kit	incl. cable set	2545521
HD+ 90i PH	H241, H276	10 - 9999	WITOS FleetView retrofit kit	incl. cable set	2545521
HD+ 110	H185	10 - 9999	WITOS FleetView retrofit kit	incl. cable set	2467062
	H258	10 - 9999	WITOS FleetView retrofit kit	incl. cable set	2617372
HD+ 110i	H209	10 - 257	WITOS FleetView retrofit kit	incl. cable set	2426598
		258 - 9999	WITOS FleetView retrofit kit	incl. cable set	2545527
	H242	10 - 9999	WITOS FleetView retrofit kit	incl. cable set	2545521
HD+ 120	H184	10 - 9999	WITOS FleetView retrofit kit	incl. cable set	2467062
	H259	10 - 9999	WITOS FleetView retrofit kit	incl. cable set	2617372
HD+ 120i	H207	10 - 181	WITOS FleetView retrofit kit	incl. cable set	2426598
		182 - 9999	WITOS FleetView retrofit kit	incl. cable set	2545527
	H243, H274	10 - 9999	WITOS FleetView retrofit kit	incl. cable set	2545521
HD+ 140	H184	10 - 9999	WITOS FleetView retrofit kit	incl. cable set	2467062
	H259	10 - 9999	WITOS FleetView retrofit kit	incl. cable set	2617372
HD+ 140i	H207	10 - 181	WITOS FleetView retrofit kit	incl. cable set	2426598
		182 - 9999	WITOS FleetView retrofit kit	incl. cable set	2545527
	H243, H274	10 - 9999	WITOS FleetView retrofit kit	incl. cable set	2545521
HD 70	H187	10 - 9999	WITOS FleetView retrofit kit	incl. cable set	2572866

WITOS FLEETVIEW					
Series code	Serial code	Series range	Part	Package includes	Part no.
HD 75	H187	10 - 9999	WITOS FleetView retrofit kit	incl. cable set	2572866
HD 90	H181	10 - 9999	WITOS FleetView retrofit kit	incl. cable set	2572866
HD 110	H181	10 - 9999	WITOS FleetView retrofit kit	incl. cable set	2572866
DV 65	H197	10 - 9999	WITOS FleetView retrofit kit	incl. cable set	2467052
DV 70	H191	10 - 9999	WITOS FleetView retrofit kit	incl. cable set	2467052
DV 85	H198	10 - 9999	WITOS FleetView retrofit kit	incl. cable set	2467052
DV 90	H192	10 - 9999	WITOS FleetView retrofit kit	incl. cable set	2467052
DV+ 70i	H225, H277	10 - 9999	WITOS FleetView retrofit kit	incl. cable set	2409686
DV+ 90i	H226, H246, H278	10 - 9999	WITOS FleetView retrofit kit	incl. cable set	2409686
HP 280	H249	10 - 9999	WITOS FleetView retrofit kit	incl. cable set	2612135
HP 240	H283	10 - 9999	WITOS FleetView retrofit kit	incl. cable set	2560728
HP 280i	H271	10 - 9999	WITOS FleetView retrofit kit	incl. cable set	2560728
HP 240i	H282	10 - 9999	WITOS FleetView retrofit kit	incl. cable set	2560728
GRW 280i	H212	10 - 9999	WITOS FleetView retrofit kit	incl. cable set	2527574
	H244	10 - 9999	WITOS FleetView retrofit kit	incl. cable set	2560728
GRW 180i	H228	10 - 9999	WITOS FleetView retrofit kit	incl. cable set	2345897
GRW 280	H195, H229	10 - 9999	WITOS FleetView retrofit kit	incl. cable set	2527574
GRW 10	H190	10 - 9999	WITOS FleetView retrofit kit	incl. cable set	2623657
GRW 15	H190	10 - 9999	WITOS FleetView retrofit kit	incl. cable set	2623657
GRW 18	H190	10 - 9999	WITOS FleetView retrofit kit	incl. cable set	2623657
GRW 21	H190	10 - 9999	WITOS FleetView retrofit kit	incl. cable set	2623657
GRW 24	H190	10 - 9999	WITOS FleetView retrofit kit	incl. cable set	2623657

EMERGENCY KITS

Small faults in electronic or electrical systems can severely disrupt day-to-day operations on the construction site. With our genuine HAMM service set, you have all the necessary sensors, relays, switches, fuses as well as control parts available on site. Thanks to our emergency kits, you can easily bring the machine back into operation without an extended period of down time. The large variety of parts effectively supports your service and maintenance staff. Genuine HAMM service sets are an essential addition to any workshop or workshop trolley.

> Read more online

EMERGENCY KITS

HAMM emergency kits provide rapid assistance in the repair of electronic components.

EMERGENCY KITS			
Series code	Serial code	Version	Part no.
3205	H188	Elektronic system/Hammtronic	2117311
		Standard electronic system	2117310
3307	H189	Standard electronic system	2117310
		Elektronic system/Hammtronic	2117311
3410	H179	Standard electronic system	2117310
		Elektronic system/Hammtronic	2117311
3411	H179	Standard electronic system	2117310

Original HAMM

EMERGENCY KITS

EMERGENCY KITS			
Series code	Serial code	Version	Part no.
3411	H179	Elektronic system/Hammtronic	2117311
3412	H180	Elektronic system/Hammtronic	2117311
		Standard electronic system	2117310
3414	H180	Elektronic system/Hammtronic	2117311
		Standard electronic system	2117310
3516	H176	Standard electronic system	2117310
		Elektronic system/Hammtronic	2117311
3518	H176	Standard electronic system	2117310
		Elektronic system/Hammtronic	2117311
3520	H176	Standard electronic system	2117310
		Elektronic system/Hammtronic	2117311
3625	H177	Standard electronic system	2117310
		Elektronic system/Hammtronic	2117311
HD 70	H187	Electronic system, split drum (ASC)	2117313
		Standard electronic system	2117312
HD 75	H187	Electronic system, split drum (ASC)	2117313
		Standard electronic system	2117312
HD 90	H181	Standard electronic system	2117312
		Electronic system, split drum (ASC)	2117313
HD 110	H181	Standard electronic system	2117312
		Electronic system, split drum (ASC)	2117313
HD 120	H182	Standard electronic system	2117312
		Electronic system, split drum (ASC)	2117313
HD 130	H182	Electronic system, split drum (ASC)	2117313
		Standard electronic system	2117312
DV 65	H197	Electronic system	2035744
DV 70	H191	Electronic system	2035744

EMERGENCY KITS			
Series code	Serial code	Version	Part no.
DV 85	H198	Electronic system	2035744
DV 90	H192	Electronic system	2035744
HD 150 TT	H193	Standard electronic system	2117312

Original HAMM
TOOLS

Nothing is more important than the reliability of your machine. Whether in the workshop or directly on the construction site – with HAMM's special tools, repairs and maintenance become a pleasure to carry out. Sophisticated technology and ease of use are the hallmarks of these many small helpers in day-to-day construction site operations.

> Read more online

OTHER TOOLS

Special tools for specific applications help you to adjust and monitor your machine's functions.

OTHER TOOLS					
Series code	Serial code	Series range	Part	Description	Part no.
H 5i	H222, H270	1 - 9999	Frequency and amplitude meter	This special tool can be used to measure vibratory drums' vibration frequency and amplitude.	2277444
H 7i	H222, H270	1 - 9999	Frequency and amplitude meter	This special tool can be used to measure vibratory drums' vibration frequency and amplitude.	2277444
			Frequency meter	The frequency meter is used to test and adjust oscillating and VIO drum belt tension.	2256382
H 10i	H235, H266, H284	1 - 9999	Frequency and amplitude meter	This special tool can be used to measure vibratory drums' vibration frequency and amplitude.	2277444
H 11i	H211, H235, H266, H284	1 - 9999	Frequency and amplitude meter	This special tool can be used to measure vibratory drums' vibration frequency and amplitude.	2277444
H 12i	H235, H266, H284	1 - 9999	Frequency and amplitude meter	This special tool can be used to measure vibratory drums' vibration frequency and amplitude.	2277444
H 13i	H234, H267	1 - 9999	Frequency and amplitude meter	This special tool can be used to measure vibratory drums' vibration frequency and amplitude.	2277444

OTHER TOOLS

Series code	Serial code	Series range	Part	Description	Part no.
H 13i VIO	H234, H267	1 - 9999	Frequency meter	The frequency meter is used to test and adjust oscillating and VIO drum belt tension.	2256382
H 14i	H234, H267	1 - 9999	Frequency and amplitude meter	This special tool can be used to measure vibratory drums' vibration frequency and amplitude.	2277444
H 16i	H234, H267	1 - 9999	Frequency and amplitude meter	This special tool can be used to measure vibratory drums' vibration frequency and amplitude.	2277444
H 18i	H202, H233, H268	1 - 9999	Frequency and amplitude meter	This special tool can be used to measure vibratory drums' vibration frequency and amplitude.	2277444
H 20i	H233, H268	1 - 9999	Frequency and amplitude meter	This special tool can be used to measure vibratory drums' vibration frequency and amplitude.	2277444
H 25i	H233, H268	1 - 9999	Frequency and amplitude meter	This special tool can be used to measure vibratory drums' vibration frequency and amplitude.	2277444
H 25i VC	H238	1 - 9999	Frequency and amplitude meter	This special tool can be used to measure vibratory drums' vibration frequency and amplitude.	2277444
3205	H188	1 - 9999	Frequency and amplitude meter	This special tool can be used to measure vibratory drums' vibration frequency and amplitude.	2277444
3307	H189	1 - 9999	Frequency and amplitude meter	This special tool can be used to measure vibratory drums' vibration frequency and amplitude.	2277444
			Frequency meter	The frequency meter is used to test and adjust oscillating and VIO drum belt tension.	2256382
3410	H179, H206, H217, H269	1 - 9999	Frequency and amplitude meter	This special tool can be used to measure vibratory drums' vibration frequency and amplitude.	2277444
3411	H179, H206, H217, H221, H269	1 - 9999	Frequency and amplitude meter	This special tool can be used to measure vibratory drums' vibration frequency and amplitude.	2277444
3412	H180, H214	1 - 9999	Frequency and amplitude meter	This special tool can be used to measure vibratory drums' vibration frequency and amplitude.	2277444
			Frequency meter	The frequency meter is used to test and adjust oscillating and VIO drum belt tension.	2256382
3414	H180, H214	1 - 9999	Frequency and amplitude meter	This special tool can be used to measure vibratory drums' vibration frequency and amplitude.	2277444
			Frequency meter	The frequency meter is used to test and adjust oscillating and VIO drum belt tension.	2256382
3516	H176, H215	1 - 9999	Frequency and amplitude meter	This special tool can be used to measure vibratory drums' vibration frequency and amplitude.	2277444
3518	H176	1 - 9999	Frequency and amplitude meter	This special tool can be used to measure vibratory drums' vibration frequency and amplitude.	2277444
3520	H176	1 - 9999	Frequency and amplitude meter	This special tool can be used to measure vibratory drums' vibration frequency and amplitude.	2277444
3625	H177	1 - 9999	Frequency and amplitude meter	This special tool can be used to measure vibratory drums' vibration frequency and amplitude.	2277444
318	H239	1 - 9999	Frequency and amplitude meter	This special tool can be used to measure vibratory drums' vibration frequency and amplitude.	2277444
320	H239	1 - 9999	Frequency and amplitude meter	This special tool can be used to measure vibratory drums' vibration frequency and amplitude.	2277444
322	H239	1 - 9999	Frequency and amplitude meter	This special tool can be used to measure vibratory drums' vibration frequency and amplitude.	2277444
325	H239	1 - 9999	Frequency and amplitude meter	This special tool can be used to measure vibratory drums' vibration frequency and amplitude.	2277444
HD 8	H199	1 - 9999	Frequency and amplitude meter	This special tool can be used to measure vibratory drums' vibration frequency and amplitude.	2277444

OTHER TOOLS

Series code	Serial code	Series range	Part	Description	Part no.
HD 10C	H199	1 - 9999	Frequency and amplitude meter	This special tool can be used to measure vibratory drums' vibration frequency and amplitude.	2277444
HD 8	H263	1 - 9999	Frequency and amplitude meter	This special tool can be used to measure vibratory drums' vibration frequency and amplitude.	2277444
HD 9	H263	1 - 9999	Frequency and amplitude meter	This special tool can be used to measure vibratory drums' vibration frequency and amplitude.	2277444
HD 10C	H263	1 - 9999	Frequency and amplitude meter	This special tool can be used to measure vibratory drums' vibration frequency and amplitude.	2277444
HD 10	H230, H262	1 - 9999	Frequency and amplitude meter	This special tool can be used to measure vibratory drums' vibration frequency and amplitude.	2277444
			Frequency meter	The frequency meter is used to test and adjust oscillating and VIO drum belt tension.	2256382
HD 10i	H251	1 - 9999	Frequency and amplitude meter	This special tool can be used to measure vibratory drums' vibration frequency and amplitude.	2277444
			Frequency meter	The frequency meter is used to test and adjust oscillating and VIO drum belt tension.	2256382
HD 12	H230, H262	1 - 9999	Frequency and amplitude meter	This special tool can be used to measure vibratory drums' vibration frequency and amplitude.	2277444
			Frequency meter	The frequency meter is used to test and adjust oscillating and VIO drum belt tension.	2256382
HD 12i	H251	1 - 9999	Frequency and amplitude meter	This special tool can be used to measure vibratory drums' vibration frequency and amplitude.	2277444
			Frequency meter	The frequency meter is used to test and adjust oscillating and VIO drum belt tension.	2256382
HD 13	H201	1 - 9999	Frequency and amplitude meter	This special tool can be used to measure vibratory drums' vibration frequency and amplitude.	2277444
			Frequency meter	The frequency meter is used to test and adjust oscillating and VIO drum belt tension.	2256382
HD 13i	H231, H265, H285	1 - 9999	Frequency and amplitude meter	This special tool can be used to measure vibratory drums' vibration frequency and amplitude.	2277444
			Frequency meter	The frequency meter is used to test and adjust oscillating and VIO drum belt tension.	2256382
HD 14	H201	1 - 9999	Frequency and amplitude meter	This special tool can be used to measure vibratory drums' vibration frequency and amplitude.	2277444
			Frequency meter	The frequency meter is used to test and adjust oscillating and VIO drum belt tension.	2256382
HD 14i	H231, H265, H285	1 - 9999	Frequency and amplitude meter	This special tool can be used to measure vibratory drums' vibration frequency and amplitude.	2277444
			Frequency meter	The frequency meter is used to test and adjust oscillating and VIO drum belt tension.	2256382
HD 30	H247	1 - 9999	Frequency and amplitude meter	This special tool can be used to measure vibratory drums' vibration frequency and amplitude.	2277444
			Frequency meter	The frequency meter is used to test and adjust oscillating and VIO drum belt tension.	2256382
HD 35	H247	1 - 9999	Frequency and amplitude meter	This special tool can be used to measure vibratory drums' vibration frequency and amplitude.	2277444
			Frequency meter	The frequency meter is used to test and adjust oscillating and VIO drum belt tension.	2256382
HD+ 70i	H186	1 - 9999	Frequency and amplitude meter	This special tool can be used to measure vibratory drums' vibration frequency and amplitude.	2277444
			Frequency meter	The frequency meter is used to test and adjust oscillating and VIO drum belt tension.	2256382

OTHER TOOLS

Series code	Serial code	Series range	Part	Description	Part no.
HD+ 70i	H186	10 - 9999	Oscillating drum adjustment tool	This tool is used to adjust the oscillation drum after a belt change or repair.	2532355
	H272	1 - 9999	Oscillating drum adjustment tool	This tool is used to adjust the oscillation drum after a belt change or repair.	2532355
			Frequency and amplitude meter	This special tool can be used to measure vibratory drums' vibration frequency and amplitude.	2277444
			Frequency meter	The frequency meter is used to test and adjust oscillating and VIO drum belt tension.	2256382
HD+ 80i	H186	1 - 9999	Frequency and amplitude meter	This special tool can be used to measure vibratory drums' vibration frequency and amplitude.	2277444
			Frequency meter	The frequency meter is used to test and adjust oscillating and VIO drum belt tension.	2256382
		10 - 9999	Oscillating drum adjustment tool	This tool is used to adjust the oscillation drum after a belt change or repair.	2532355
	H272	1 - 9999	Oscillating drum adjustment tool	This tool is used to adjust the oscillation drum after a belt change or repair.	2532355
			Frequency and amplitude meter	This special tool can be used to measure vibratory drums' vibration frequency and amplitude.	2277444
			Frequency meter	The frequency meter is used to test and adjust oscillating and VIO drum belt tension.	2256382
HD+ 90	H185	1 - 9999	Frequency and amplitude meter	This special tool can be used to measure vibratory drums' vibration frequency and amplitude.	2277444
			Frequency meter	The frequency meter is used to test and adjust oscillating and VIO drum belt tension.	2256382
		10 - 9999	Oscillating drum adjustment tool	This tool is used to adjust the oscillation drum after a belt change or repair.	2532355
HD+ 90i	H209	1 - 9999	Frequency and amplitude meter	This special tool can be used to measure vibratory drums' vibration frequency and amplitude.	2277444
			Frequency meter	The frequency meter is used to test and adjust oscillating and VIO drum belt tension.	2256382
HD+ 90	H258	1 - 9999	Frequency and amplitude meter	This special tool can be used to measure vibratory drums' vibration frequency and amplitude.	2277444
			Frequency meter	The frequency meter is used to test and adjust oscillating and VIO drum belt tension.	2256382
		10 - 9999	Oscillating drum adjustment tool	This tool is used to adjust the oscillation drum after a belt change or repair.	2532355
HD+ 90i	H242	1 - 9999	Frequency and amplitude meter	This special tool can be used to measure vibratory drums' vibration frequency and amplitude.	2277444
			Frequency meter	The frequency meter is used to test and adjust oscillating and VIO drum belt tension.	2256382
		10 - 9999	Oscillating drum adjustment tool	This tool is used to adjust the oscillation drum after a belt change or repair.	2532355
HD+ 90i PH	H241	1 - 9999	Frequency and amplitude meter	This special tool can be used to measure vibratory drums' vibration frequency and amplitude.	2277444
			Frequency meter	The frequency meter is used to test and adjust oscillating and VIO drum belt tension.	2256382
		10 - 9999	Oscillating drum adjustment tool	This tool is used to adjust the oscillation drum after a belt change or repair.	2532355
	H276	1 - 9999	Oscillating drum adjustment tool	This tool is used to adjust the oscillation drum after a belt change or repair.	2532355
			Frequency and amplitude meter	This special tool can be used to measure vibratory drums' vibration frequency and amplitude.	2277444

OTHER TOOLS					
Series code	Serial code	Series range	Part	Description	Part no.
HD+ 90i PH	H276	1 - 9999	Frequency meter	The frequency meter is used to test and adjust oscillating and VIO drum belt tension.	2256382
HD+ 110	H185	10 - 9999	Oscillating drum adjustment tool	This tool is used to adjust the oscillation drum after a belt change or repair.	2532355
	H258	1 - 9999	Frequency and amplitude meter	This special tool can be used to measure vibratory drums' vibration frequency and amplitude.	2277444
			Frequency meter	The frequency meter is used to test and adjust oscillating and VIO drum belt tension.	2256382
		10 - 9999	Oscillating drum adjustment tool	This tool is used to adjust the oscillation drum after a belt change or repair.	2532355
HD+ 110i	H209	1 - 9999	Frequency and amplitude meter	This special tool can be used to measure vibratory drums' vibration frequency and amplitude.	2277444
			Frequency meter	The frequency meter is used to test and adjust oscillating and VIO drum belt tension.	2256382
	H242	1 - 9999	Frequency and amplitude meter	This special tool can be used to measure vibratory drums' vibration frequency and amplitude.	2277444
			Frequency meter	The frequency meter is used to test and adjust oscillating and VIO drum belt tension.	2256382
		10 - 9999	Oscillating drum adjustment tool	This tool is used to adjust the oscillation drum after a belt change or repair.	2532355
HD+ 120	H184, H259	1 - 9999	Frequency and amplitude meter	This special tool can be used to measure vibratory drums' vibration frequency and amplitude.	2277444
			Frequency meter	The frequency meter is used to test and adjust oscillating and VIO drum belt tension.	2256382
		10 - 9999	Oscillating drum adjustment tool	This tool is used to adjust the oscillation drum after a belt change or repair.	2247253
HD+ 120i	H207, H243	1 - 9999	Frequency and amplitude meter	This special tool can be used to measure vibratory drums' vibration frequency and amplitude.	2277444
			Frequency meter	The frequency meter is used to test and adjust oscillating and VIO drum belt tension.	2256382
		10 - 9999	Oscillating drum adjustment tool	This tool is used to adjust the oscillation drum after a belt change or repair.	2247253
	H274	1 - 9999	Oscillating drum adjustment tool	This tool is used to adjust the oscillation drum after a belt change or repair.	2247253
			Frequency and amplitude meter	This special tool can be used to measure vibratory drums' vibration frequency and amplitude.	2277444
			Frequency meter	The frequency meter is used to test and adjust oscillating and VIO drum belt tension.	2256382
HD+ 140	H184	10 - 9999	Oscillating drum adjustment tool	This tool is used to adjust the oscillation drum after a belt change or repair.	2247253
	H259	1 - 9999	Frequency and amplitude meter	This special tool can be used to measure vibratory drums' vibration frequency and amplitude.	2277444
			Frequency meter	The frequency meter is used to test and adjust oscillating and VIO drum belt tension.	2256382
		10 - 9999	Oscillating drum adjustment tool	This tool is used to adjust the oscillation drum after a belt change or repair.	2247253
HD+ 140i	H207, H243	1 - 9999	Frequency and amplitude meter	This special tool can be used to measure vibratory drums' vibration frequency and amplitude.	2277444
			Frequency meter	The frequency meter is used to test and adjust oscillating and VIO drum belt tension.	2256382
		10 - 9999	Oscillating drum adjustment tool	This tool is used to adjust the oscillation drum after a belt change or repair.	2247253

OTHER TOOLS

Series code	Serial code	Series range	Part	Description	Part no.
HD+ 140i	H274	1 - 9999	Oscillating drum adjustment tool	This tool is used to adjust the oscillation drum after a belt change or repair.	2247253
			Frequency and amplitude meter	This special tool can be used to measure vibratory drums' vibration frequency and amplitude.	2277444
			Frequency meter	The frequency meter is used to test and adjust oscillating and VIO drum belt tension.	2256382
HD 70	H187	1 - 9999	Frequency and amplitude meter	This special tool can be used to measure vibratory drums' vibration frequency and amplitude.	2277444
			Frequency meter	The frequency meter is used to test and adjust oscillating and VIO drum belt tension.	2256382
HD 75	H187	1 - 9999	Frequency and amplitude meter	This special tool can be used to measure vibratory drums' vibration frequency and amplitude.	2277444
			Frequency meter	The frequency meter is used to test and adjust oscillating and VIO drum belt tension.	2256382
HD 90	H174, H181	1 - 9999	Frequency and amplitude meter	This special tool can be used to measure vibratory drums' vibration frequency and amplitude.	2277444
			Frequency meter	The frequency meter is used to test and adjust oscillating and VIO drum belt tension.	2256382
HD 110	H174, H181	1 - 9999	Frequency and amplitude meter	This special tool can be used to measure vibratory drums' vibration frequency and amplitude.	2277444
			Frequency meter	The frequency meter is used to test and adjust oscillating and VIO drum belt tension.	2256382
HD 120	H275, H182	1 - 9999	Frequency and amplitude meter	This special tool can be used to measure vibratory drums' vibration frequency and amplitude.	2277444
			Frequency meter	The frequency meter is used to test and adjust oscillating and VIO drum belt tension.	2256382
		10 - 9999	Oscillating drum adjustment tool	This tool is used to adjust the oscillation drum after a belt change or repair.	2247253
HD 130	H275	1 - 9999	Frequency and amplitude meter	This special tool can be used to measure vibratory drums' vibration frequency and amplitude.	2277444
			Frequency meter	The frequency meter is used to test and adjust oscillating and VIO drum belt tension.	2256382
		10 - 9999	Oscillating drum adjustment tool	This tool is used to adjust the oscillation drum after a belt change or repair.	2247253
	H182	10 - 9999	Oscillating drum adjustment tool	This tool is used to adjust the oscillation drum after a belt change or repair.	2247253
DV 65	H197	1 - 9999	Frequency and amplitude meter	This special tool can be used to measure vibratory drums' vibration frequency and amplitude.	2277444
			Frequency meter	The frequency meter is used to test and adjust oscillating and VIO drum belt tension.	2256382
DV 70	H191	1 - 9999	Frequency and amplitude meter	This special tool can be used to measure vibratory drums' vibration frequency and amplitude.	2277444
			Frequency meter	The frequency meter is used to test and adjust oscillating and VIO drum belt tension.	2256382
DV 85	H198	1 - 9999	Frequency and amplitude meter	This special tool can be used to measure vibratory drums' vibration frequency and amplitude.	2277444
			Frequency meter	The frequency meter is used to test and adjust oscillating and VIO drum belt tension.	2256382
DV 90	H192	1 - 9999	Frequency and amplitude meter	This special tool can be used to measure vibratory drums' vibration frequency and amplitude.	2277444
			Frequency meter	The frequency meter is used to test and adjust oscillating and VIO drum belt tension.	2256382

OTHER TOOLS					
Series code	Serial code	Series range	Part	Description	Part no.
DV+ 70i	H225	1 - 9999	Frequency and amplitude meter	This special tool can be used to measure vibratory drums' vibration frequency and amplitude.	2277444
			Frequency meter	The frequency meter is used to test and adjust oscillating and VIO drum belt tension.	2256382
		10 - 9999	Oscillating drum adjustment tool	This tool is used to adjust the oscillation drum after a belt change or repair.	2532355
DV+ 90i	H226, H246	1 - 9999	Frequency and amplitude meter	This special tool can be used to measure vibratory drums' vibration frequency and amplitude.	2277444
			Frequency meter	The frequency meter is used to test and adjust oscillating and VIO drum belt tension.	2256382
		10 - 9999	Oscillating drum adjustment tool	This tool is used to adjust the oscillation drum after a belt change or repair.	2532355

Original KLEEMANN

CRUSHING TOOLS FOR IMPACT CRUSHERS

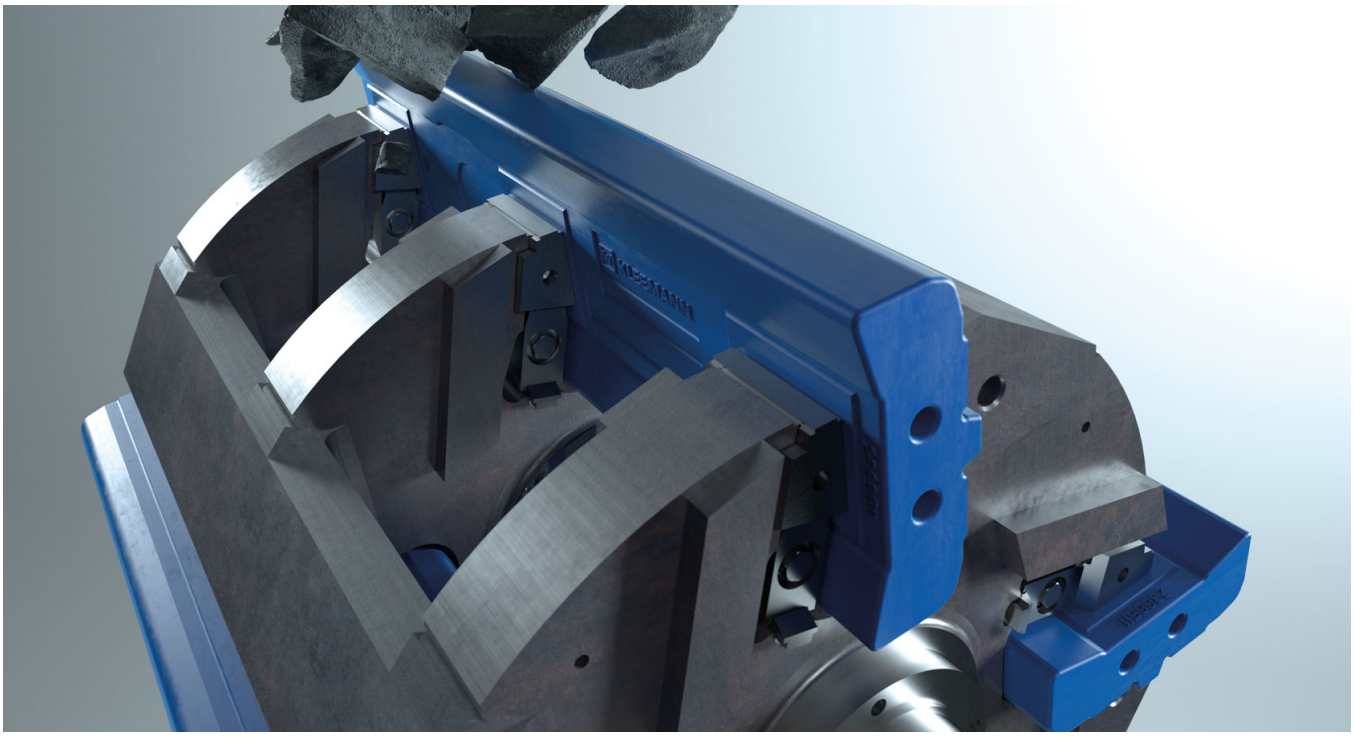

KLEEMANN impact crushers can be used for a wide range of applications. From traditional natural stone processing to the recycling of residual construction materials and mining applications, the focus is primarily on two objectives: increasing service life and reducing operating costs. The crushing tools are subject to varying degrees of wear depending on various influencing factors.

> Read more online

IMPACT BARS

KLEEMANN only uses impact bars made of extremely wear-resistant material. The precise design of the plug connection ensures that it can be changed quickly during assembly.

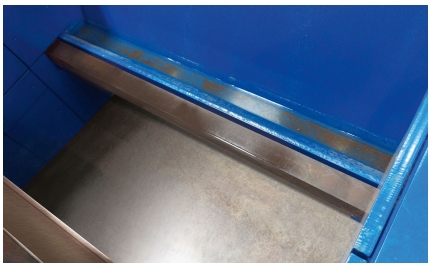

IMPACT BARS				
Series code	Serial code	Series range	Position	Part no.
MR 100 R	K012	1 - 9999	rear	F10293604
			front	F10293614
MR 100 Z	K013	1 - 9999	rear	F10293604

IMPACT BARS

Series code	Serial code	Series range	Position	Part no.
MR 100 Z	K013	1 - 9999	front	F10293614
MR 110 R EVO	K016	1 - 9999	front; rear	F20010151
MR 110 Z EVO	K017	1 - 9999	front; rear	F20010151
MR 110 EVO	K018, K019	1 - 9999	front; rear	F20010151
MR 122 PRO	K062	1 - 9999	front; rear	F10501494
MR 130 R EVO	K023	1 - 199	front; rear	F10534824
		200 - 9999	front; rear	F10534824
MR 130 Z EVO	K024	1 - 299	front; rear	F10534824
		301 - 9999	front; rear	F10534824
MR 130 EVO	K077, K078	1 - 9999	front; rear	F10534824
MR 150 PRO	K063	1 - 9999	front; rear	F10365564
MR 170 PRO	K033	1 - 9999	front; rear	F10292013
MR 122i PRO	K031	1 - 9999	front; rear	F10501494
MR 130 PRO	K125, K124	1 - 9999	front; rear	F10534824
MR 100 NEO	K136	1 - 9999	front; rear	F20010151
MR 100 NEOe	K138		front; rear	F20010151

Original KLEEMANN

CRUSHING TOOLS FOR IMPACT CRUSHERS

IMPACT PLATES

Thick-walled impact plates made of KLEEMANN Resistant Steel protect the lower impact wings against premature wear.

IMPACT PLATES					
Series code	Serial code	Series range	Part	Version	Part no.
MR 100 R	K012	33 - 9999	Upper impact plate Mn	Manganese steel	F10108612
			Lower impact plate Mn	Manganese steel	F10362772
MR 100 Z	K013	1 - 9999	Upper impact plate Mn	Manganese steel	F10108612
			Lower impact plate Mn	Manganese steel	F10362772
MR 110 R EVO	K016	1 - 9999	Impact plate C	Chrome steel	2277132
			Set of impact plates C	Chrome steel	WX3269465
			Set of impact plates M	Martensitic steel	2277483
			Set of MC impact plates	Martensitic steel with ceramic insert	2634218
			Set of impact plates Mn	Manganese steel	2274596
MR 110 Z EVO	K017		Impact plate C	Chrome steel	2277132
		1 - 9999	Set of impact plates C	Chrome steel	WX3269465
			Set of impact plates M	Martensitic steel	2277483
			Set of MC impact plates	Martensitic steel with ceramic insert	2634218
			Set of impact plates Mn	Manganese steel	2274596
MR 110 EVO	K018, K019		Impact plate C	Chrome steel	2277132
			Set of impact plates C	Chrome steel	WX3269465
		1 - 9999	Set of impact plates M	Martensitic steel	2277483
			Set of MC impact plates	Martensitic steel with ceramic insert	2634218
			Set of impact plates Mn	Manganese steel	2274596
MR 122 PRO	K062	1 - 9999	Set of impact plates M	Martensitic steel	2535411

IMPACT PLATES

Series code	Serial code	Series range	Part	Version	Part no.
MR 122 PRO	K062	1 - 9999	Set of impact plates Mn	Manganese steel	2274599
MR 130 R EVO	K023	1 - 199	Set of impact plates M	Martensitic steel	2277481
			Set of impact plates Mn	Manganese steel	2274600
		200 - 9999	Set of impact plates M	Martensitic steel	2277486
			Set of MC impact plates	Martensitic steel with ceramic insert	2634235
			Set of impact plates Mn	Manganese steel	2274601
MR 130 Z EVO	K024	1 - 299	Set of impact plates M	Martensitic steel	2277481
			Set of impact plates Mn	Manganese steel	2274600
		301 - 9999	Set of impact plates M	Martensitic steel	2277486
			Set of MC impact plates	Martensitic steel with ceramic insert	2634235
			Set of impact plates Mn	Manganese steel	2274601
MR 130 EVO	K077	1 - 9999	Set of impact plates C	Chrome steel	WX3269467
			Set of impact plates M	Martensitic steel	2277486
			Set of MC impact plates	Martensitic steel with ceramic insert	2634235
			Set of impact plates Mn	Manganese steel	2274601
	K078		Set of impact plates C	Chrome steel	WX3269467
		1 - 9999	Set of impact plates M	Martensitic steel	2277486
			Set of MC impact plates	Martensitic steel with ceramic insert	2634235
			Set of impact plates Mn	Manganese steel	2274601
MR 150 PRO	K063	1 - 9999	Impact plate	Reinforced manganese steel	F10001912
				Manganese steel	F10366263
MR 170 PRO	K033	1 - 9999	Impact plate	Manganese steel, toothed	F10001892
				Reinforced manganese steel	F10001912
MR 122i PRO	K031	1 - 9999	Set of impact plates M	Martensitic steel	2535411
			Set of impact plates Mn	Manganese steel	2274599
MR 130 PRO	K125, K124		Set of impact plates C	Chrome steel	WX3269467

Original KLEEMANN

CRUSHING TOOLS FOR IMPACT CRUSHERS

IMPACT PLATES					
Series code	Serial code	Series range	Part	Version	Part no.
MR 130 PRO	K125, K124	1 - 9999	Set of impact plates M	Martensitic steel	2277486
			Set of MC impact plates	Martensitic steel with ceramic insert	2634235
			Set of impact plates Mn	Manganese steel	2274601
MR 100 NEO	K136	1 - 9999	Set of impact plates, Mn	Manganese steel	3040062
MR 100 NEOe	K138	1 - 9999	Set of impact plates, Mn	Manganese steel	3040062

IMPACT WINGS

To manufacture the impact wings, KLEEMANN only uses hard manganese steel with excellent work hardening for maximum wear resistance. The impact wings stand out for their long service life due to the thick-walled wear layer and optimum crushing results due to their special design.

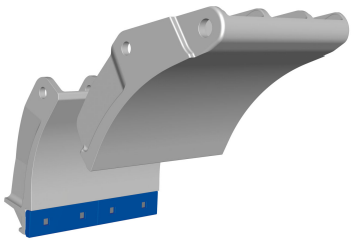

IMPACT WINGS				
Series code	Serial code	Series range	Position	Part no.
MR 100 R	K012	1 - 9999	lower	F10322161
			upper	F10322171
MR 100 Z	K013	1 - 9999	lower	F10322161
			upper	F10322171
MR 110 R EVO	K016	1 - 9999	upper	F20009826
			lower	F20009852
MR 110 Z EVO	K017	1 - 9999	upper	F20009826
			lower	F20009852
MR 110 EVO	K018, K019	1 - 9999	lower	F20009852
			upper	F20009826
MR 122 PRO	K062	1 - 9999	lower	F10501511

IMPACT WINGS

Series code	Serial code	Series range	Position	Part no.
MR 122 PRO	K062	1 - 9999	upper	F10501501
MR 130 R EVO	K023	1 - 199	lower	F10483791
			upper	F10329091
		200 - 9999	upper	F20011752
			lower	F20011758
MR 130 Z EVO	K024	1 - 299	lower	F10483791
			upper	F10329091
		301 - 9999	upper	F20011752
			lower	F20011758
MR 130 EVO	K077, K078	1 - 9999	upper	F20011752
			lower	F20011758
MR 150 PRO	K063	1 - 9999	rear	F10365491
			front	F10363331
MR 170 PRO	K033	1 - 9999	front	2262174
			rear	2262238
MR 122i PRO	K031	1 - 9999	lower	F10501511
			lower	F10501501
MR 130 PRO	K125, K124	1 - 9999	upper	F20011752
			lower	F20011758
MR 100 NEO	K136	1 - 9999		3151099
MR 100 NEOe	K138	1 - 9999		3151099

Original KLEEMANN

CRUSHING TOOLS FOR IMPACT CRUSHERS

BLOW BARS

Achieving an outstanding crushing result with low wear costs is significantly influenced by the choice of the right blow bars. Genuine KLEEMANN blow bars offer more than just the right dimensions – the materials used, alloying elements and the entire casting process all play an important role in creating a reliable crushing tool.

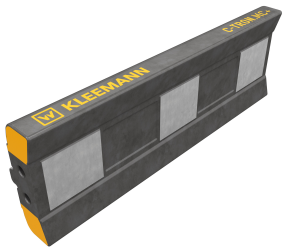

BLOW BARS

Series code	Serial code	Series range	Part	Version	Application	Feed size	Maximum feed size up to	Material with non-crushable content	Rotor	Package includes	Part no.
MR 100 R	K012	1 - 9999	Set of X-TRON CC blow bars	Chrome steel - ceramic	Building rubble, mixed; Natural stone, medium-hard; Natural stone, hard; Asphalt; Gravel	0 - 300	300	No	for 4-piece rotor high/low	2 pcs.	2592680
				Chrome steel - ceramic	Building rubble, mixed; Natural stone, medium-hard; Natural stone, hard; Asphalt; Gravel	0 - 300	300	No	for 4-piece rotor	4 pcs.	2605024

BLOW BARS

Series code	Serial code	Series range	Part	Version	Application	Feed size	Maximum feed size up to	Material with non-crushable content	Rotor	Package includes	Part no.
MR 100 R	K012	1 - 9999	Set of X-TRON M blow bars	Martensitic steel	Soft natural stone; Building rubble, mixed	0 - 700	700	Yes	for 4-piece rotor	4 pcs.	2605001
				Martensitic steel	Soft natural stone; Building rubble, mixed; Natural stone, medium-hard	0 - 700	700	Yes	for 4-piece rotor high/low	2 pcs.	2592669
			Set of X-TRON Mn blow bars	Manganese steel	Soft natural stone	0 - 700	700	Yes	for 4-piece rotor	4 pcs.	2604990
		33 - 9999	Set of X-TRON. MC+ blow bars	Martensite-ceramic premium	Building rubble, mixed; Reinforced concrete; Natural stone, medium-hard; Natural stone, hard; Asphalt; Gravel	0 - 500	500	Yes	for 4-piece rotor high/low	4 pcs.	3004916

CRUSHING TOOLS FOR IMPACT CRUSHERS

BLOW BARS											
Series code	Serial code	Series range	Part	Version	Application	Feed size	Maximum feed size up to	Material with non-crushable content	Rotor	Package includes	Part no.
MR 100 R	K012	33 - 9999	Set of X-TRON Mn blow bars	Manganese steel	Soft natural stone	0 - 700	700	Yes	for 4-piece rotor high/low	2 pcs.	2592653
MR 100 Z	K013	1 - 9999	Set of X-TRON. MC+ blow bars	Martensite-ceramic premium	Building rubble, mixed; Reinforced concrete; Natural stone, medium-hard; Natural stone, hard; Asphalt; Gravel	0 - 500	500	Yes	for 4-piece rotor high/low	4 pcs.	3004916
			Set of X-TRON CC blow bars	Chrome steel - ceramic	Building rubble, mixed; Natural stone, medium-hard; Natural stone, hard; Asphalt; Gravel	0 - 300	300	No	for 4-piece rotor high/low	2 pcs.	2592680

BLOW BARS

Series code	Serial code	Series range	Part	Version	Application	Feed size	Maximum feed size up to	Material with non-crushable content	Rotor	Package includes	Part no.
MR 100 Z	K013	1 - 9999	Set of X-TRON CC blow bars	Chrome steel - ceramic	Building rubble, mixed; Natural stone, medium-hard; Natural stone, hard; Asphalt; Gravel	0 - 300	300	No	for 4-piece rotor	4 pcs.	2605024
			Set of X-TRON M blow bars	Martensitic steel	Soft natural stone; Building rubble, mixed	0 - 700	700	Yes	for 4-piece rotor	4 pcs.	2605001
				Martensitic steel	Soft natural stone; Building rubble, mixed; Natural stone, medium-hard	0 - 700	700	Yes	for 4-piece rotor high/low	2 pcs.	2592669
			Set of X-TRON Mn blow bars	Manganese steel	Soft natural stone	0 - 700	700	Yes	for 4-piece rotor high/low	2 pcs.	2592653
				Manganese steel	Soft natural stone	0 - 700	700	Yes	for 4-piece rotor	4 pcs.	2604990

CRUSHING TOOLS FOR IMPACT CRUSHERS

BLOW BARS											
Series code	Serial code	Series range	Part	Version	Application	Feed size	Maximum feed size up to	Material with non-crushable content	Rotor	Package includes	Part no.
MR 110 R EVO	K016	1 - 9999	Set of CHROMXPERT blow bars	Chrome steel - ceramic	Building rubble, mixed; Natural stone, medium-hard; Natural stone, hard; Asphalt; Gravel	0 - 300	300	No	for 4-piece rotor	4 pcs.	2604423
			Set of C-TRON C blow bars	Chrome steel	Building rubble, mixed; Natural stone, medium-hard; Reinforced concrete; Natural stone, hard; Asphalt	0 - 400	400	No	for 4-piece rotor	4 pcs.	2604419

BLOW BARS

Series code	Serial code	Series range	Part	Version	Application	Feed size	Maximum feed size up to	Material with non-crushable content	Rotor	Package includes	Part no.
MR 110 R EVO	K016	1 - 9999	Set of C-TRON CC blow bars	Chrome steel - ceramic	Building rubble, mixed; Natural stone, medium-hard; Natural stone, hard; Asphalt; Gravel	0 - 300	300	No	for 4-piece rotor	4 pcs.	2604415
				Chrome steel - ceramic	Building rubble, mixed; Natural stone, medium-hard; Natural stone, hard; Asphalt; Gravel	0 - 300	300	No	for 4-piece rotor high/low	2 pcs.	2592813
				Chrome steel - ceramic	Building rubble, mixed; Natural stone, medium-hard; Natural stone, hard; Asphalt; Gravel	0 - 300	300	No	for 3-piece rotor	3 pcs.	2592817

CRUSHING TOOLS FOR IMPACT CRUSHERS

BLOW BARS											
Series code	Serial code	Series range	Part	Version	Application	Feed size	Maximum feed size up to	Material with non-crushable content	Rotor	Package includes	Part no.
MR 110 R EVO	K016	1 - 9999	Set of C-TRON M blow bars	Martensitic steel	Soft natural stone; Building rubble, mixed	0 - 700	700	Yes	for 4-piece rotor high/low	2 pcs.	2592778
				Martensitic steel	Soft natural stone; Building rubble, mixed	0 - 700	700	Yes	for 4-piece rotor	4 pcs.	2604463
				Martensitic steel	Soft natural stone; Building rubble, mixed	0 - 700	700	Yes	for 3-piece rotor	3 pcs.	2592786
			Set of C-TRON MC+ blow bars	Martensite-ceramic premium	Building rubble, mixed; Reinforced concrete; Natural stone, medium-hard; Natural stone, hard; Asphalt; Gravel	0 - 500	500	Yes	for 3-piece rotor	3 pcs.	2593773

BLOW BARS

Series code	Serial code	Series range	Part	Version	Application	Feed size	Maximum feed size up to	Material with non-crushable content	Rotor	Package includes	Part no.
MR 110 R EVO	K016	1 - 9999	Set of C-TRON MC+ blow bars	Martensite-ceramic premium	Building rubble, mixed; Reinforced concrete; Natural stone, medium-hard; Natural stone, hard; Asphalt; Gravel	0 - 500	500	Yes	for 4-piece rotor high/low	2 pcs.	2593767
				Martensite-ceramic premium	Building rubble, mixed; Reinforced concrete; Natural stone, medium-hard; Natural stone, hard; Asphalt; Gravel	0 - 500	500	Yes	for 4-piece rotor	4 pcs.	2642126
			Set of C-TRON Mn blow bars	Manganese steel	Soft natural stone	0 - 700	700	Yes	for 4-piece rotor high/low	2 pcs.	2592682

Original KLEEMANN

CRUSHING TOOLS FOR IMPACT CRUSHERS

BLOW BARS											
Series code	Serial code	Series range	Part	Version	Application	Feed size	Maximum feed size up to	Material with non-crushable content	Rotor	Package includes	Part no.
MR 110 R EVO	K016	1 - 9999	Set of C-TRON Mn blow bars	Manganese steel	Soft natural stone	0 - 700	700	Yes	for 3-piece rotor	3 pcs.	2592766
				Manganese steel	Soft natural stone	0 - 700	700	Yes	for 4-piece rotor	4 pcs.	2604514
			Set of MartXtra blow bars	Martensite-ceramic premium	Building rubble, mixed; Reinforced concrete; Natural stone, medium-hard; Natural stone, hard; Asphalt; Gravel	0 - 700	700	Yes	for 4-piece rotor	4 pcs.	2604420
MR 110 Z EVO	K017	1 - 9999	Set of CHROMXPERT blow bars	Chrome steel - ceramic	Building rubble, mixed; Natural stone, medium-hard; Natural stone, hard; Asphalt; Gravel	0 - 300	300	No	for 4-piece rotor	4 pcs.	2604423

BLOW BARS

Series code	Serial code	Series range	Part	Version	Application	Feed size	Maximum feed size up to	Material with non-crushable content	Rotor	Package includes	Part no.
MR 110 Z EVO	K017	1 - 9999	Set of C-TRON C blow bars	Chrome steel	Building rubble, mixed; Natural stone, medium-hard; Reinforced concrete; Natural stone, hard; Asphalt	0 - 400	400	No	for 4-piece rotor	4 pcs.	2604419
			Set of C-TRON CC blow bars	Chrome steel - ceramic	Building rubble, mixed; Natural stone, medium-hard; Natural stone, hard; Asphalt; Gravel	0 - 300	300	No	for 4-piece rotor	4 pcs.	2604415

CRUSHING TOOLS FOR IMPACT CRUSHERS

BLOW BARS

Series code	Serial code	Series range	Part	Version	Application	Feed size	Maximum feed size up to	Material with non-crushable content	Rotor	Package includes	Part no.
MR 110 Z EVO	K017	1 - 9999	Set of C-TRON CC blow bars	Chrome steel - ceramic	Building rubble, mixed; Natural stone, medium-hard; Natural stone, hard; Asphalt; Gravel	0 - 300	300	No	for 3-piece rotor	3 pcs.	2592817
				Chrome steel - ceramic	Building rubble, mixed; Natural stone, medium-hard; Natural stone, hard; Asphalt; Gravel	0 - 300	300	No	for 4-piece rotor high/low	2 pcs.	2592813
			Set of C-TRON M blow bars	Martensitic steel	Soft natural stone; Building rubble, mixed	0 - 700	700	Yes	for 4-piece rotor	4 pcs.	2604463
				Martensitic steel	Soft natural stone; Building rubble, mixed	0 - 700	700	Yes	for 3-piece rotor	3 pcs.	2592786

BLOW BARS

Series code	Serial code	Series range	Part	Version	Application	Feed size	Maximum feed size up to	Material with non-crushable content	Rotor	Package includes	Part no.
MR 110 Z EVO	K017	1 - 9999	Set of C-TRON M blow bars	Martensitic steel	Soft natural stone; Building rubble, mixed	0 - 700	700	Yes	for 4-piece rotor high/low	2 pcs.	2592778
			Set of C-TRON MC+ blow bars	Martensite-ceramic premium	Building rubble, mixed; Reinforced concrete; Natural stone, medium-hard; Natural stone, hard; Asphalt; Gravel	0 - 500	500	Yes	for 4-piece rotor high/low	2 pcs.	2593767
				Martensite-ceramic premium	Building rubble, mixed; Reinforced concrete; Natural stone, medium-hard; Natural stone, hard; Asphalt; Gravel	0 - 500	500	Yes	for 3-piece rotor	3 pcs.	2593773

CRUSHING TOOLS FOR IMPACT CRUSHERS

BLOW BARS											
Series code	Serial code	Series range	Part	Version	Application	Feed size	Maximum feed size up to	Material with non-crushable content	Rotor	Package includes	Part no.
MR 110 Z EVO	K017	1 - 9999	Set of C-TRON MC+ blow bars	Martensite-ceramic premium	Building rubble, mixed; Reinforced concrete; Natural stone, medium-hard; Natural stone, hard; Asphalt; Gravel	0 - 500	500	Yes	for 4-piece rotor	4 pcs.	2642126
			Set of C-TRON Mn blow bars	Manganese steel	Soft natural stone	0 - 700	700	Yes	for 4-piece rotor high/low	2 pcs.	2592682
				Manganese steel	Soft natural stone	0 - 700	700	Yes	for 3-piece rotor	3 pcs.	2592766
				Manganese steel	Soft natural stone	0 - 700	700	Yes	for 4-piece rotor	4 pcs.	2604514

BLOW BARS

Series code	Serial code	Series range	Part	Version	Application	Feed size	Maximum feed size up to	Material with non-crushable content	Rotor	Package includes	Part no.
MR 110 Z EVO	K017	1 - 9999	Set of MartXtra blow bars	Martensite-ceramic premium	Building rubble, mixed; Reinforced concrete; Natural stone, medium-hard; Natural stone, hard; Asphalt; Gravel	0 - 700	700	Yes	for 4-piece rotor	4 pcs.	2604420
MR 110 EVO	K018	1 - 9999	Set of CHROMXPERT blow bars	Chrome steel - ceramic	Building rubble, mixed; Natural stone, medium-hard; Natural stone, hard; Asphalt; Gravel	0 - 300	300	No	for 4-piece rotor	4 pcs.	2604423

Original KLEEMANN

CRUSHING TOOLS FOR IMPACT CRUSHERS

BLOW BARS											
Series code	Serial code	Series range	Part	Version	Application	Feed size	Maximum feed size up to	Material with non-crushable content	Rotor	Package includes	Part no.
MR 110 EVO	K018	1 - 9999	Set of C-TRON C blow bars	Chrome steel	Building rubble, mixed; Natural stone, medium-hard; Reinforced concrete; Natural stone, hard; Asphalt	0 - 400	400	No	for 4-piece rotor	4 pcs.	2604419
			Set of C-TRON CC blow bars	Chrome steel - ceramic	Building rubble, mixed; Natural stone, medium-hard; Natural stone, hard; Asphalt; Gravel	0 - 300	300	No	for 3-piece rotor	3 pcs.	2592817

BLOW BARS

Series code	Serial code	Series range	Part	Version	Application	Feed size	Maximum feed size up to	Material with non-crushable content	Rotor	Package includes	Part no.
MR 110 EVO	K018	1 - 9999	Set of C-TRON CC blow bars	Chrome steel - ceramic	Building rubble, mixed; Natural stone, medium-hard; Natural stone, hard; Asphalt; Gravel	0 - 300	300	No	for 4-piece rotor	4 pcs.	2604415
				Chrome steel - ceramic	Building rubble, mixed; Natural stone, medium-hard; Natural stone, hard; Asphalt; Gravel	0 - 300	300	No	for 4-piece rotor high/low	2 pcs.	2592813
			Set of C-TRON M blow bars	Martensitic steel	Soft natural stone; Building rubble, mixed	0 - 700	700	Yes	for 4-piece rotor	4 pcs.	2604463
				Martensitic steel	Soft natural stone; Building rubble, mixed	0 - 700	700	Yes	for 3-piece rotor	3 pcs.	2592786

CRUSHING TOOLS FOR IMPACT CRUSHERS

BLOW BARS

Series code	Serial code	Series range	Part	Version	Application	Feed size	Maximum feed size up to	Material with non-crushable content	Rotor	Package includes	Part no.
MR 110 EVO	K018	1 - 9999	Set of C-TRON M blow bars	Martensitic steel	Soft natural stone; Building rubble, mixed	0 - 700	700	Yes	for 4-piece rotor high/low	2 pcs.	2592778
			Set of C-TRON MC+ blow bars	Martensite-ceramic premium	Building rubble, mixed; Reinforced concrete; Natural stone, medium-hard; Natural stone, hard; Asphalt; Gravel	0 - 500	500	Yes	for 4-piece rotor	4 pcs.	2642126
				Martensite-ceramic premium	Building rubble, mixed; Reinforced concrete; Natural stone, medium-hard; Natural stone, hard; Asphalt; Gravel	0 - 500	500	Yes	for 3-piece rotor	3 pcs.	2593773

BLOW BARS

Series code	Serial code	Series range	Part	Version	Application	Feed size	Maximum feed size up to	Material with non-crushable content	Rotor	Package includes	Part no.
MR 110 EVO	K018	1 - 9999	Set of C-TRON MC+ blow bars	Martensite-ceramic premium	Building rubble, mixed; Reinforced concrete; Natural stone, medium-hard; Natural stone, hard; Asphalt; Gravel	0 - 500	500	Yes	for 4-piece rotor high/low	2 pcs.	2593767
			Set of C-TRON Mn blow bars	Manganese steel	Soft natural stone	0 - 700	700	Yes	for 3-piece rotor	3 pcs.	2592766
				Manganese steel	Soft natural stone	0 - 700	700	Yes	for 4-piece rotor high/low	2 pcs.	2592682
				Manganese steel	Soft natural stone	0 - 700	700	Yes	for 4-piece rotor	4 pcs.	2604514

Original KLEEMANN

CRUSHING TOOLS FOR IMPACT CRUSHERS

BLOW BARS											
Series code	Serial code	Series range	Part	Version	Application	Feed size	Maximum feed size up to	Material with non-crushable content	Rotor	Package includes	Part no.
MR 110 EVO	K018	1 - 9999	Set of MartXtra blow bars	Martensite-ceramic premium	Building rubble, mixed; Reinforced concrete; Natural stone, medium-hard; Natural stone, hard; Asphalt; Gravel	0 - 700	700	Yes	for 4-piece rotor	4 pcs.	2604420
	K019	1 - 9999	Set of CHROMXPERT blow bars	Chrome steel - ceramic	Building rubble, mixed; Natural stone, medium-hard; Natural stone, hard; Asphalt; Gravel	0 - 300	300	No	for 4-piece rotor	4 pcs.	2604423

BLOW BARS

Series code	Serial code	Series range	Part	Version	Application	Feed size	Maximum feed size up to	Material with non-crushable content	Rotor	Package includes	Part no.
MR 110 EVO	K019	1 - 9999	Set of C-TRON C blow bars	Chrome steel	Building rubble, mixed; Natural stone, medium-hard; Reinforced concrete; Natural stone, hard; Asphalt	0 - 400	400	No	for 4-piece rotor	4 pcs.	2604419
			Set of C-TRON CC blow bars	Chrome steel - ceramic	Building rubble, mixed; Natural stone, medium-hard; Natural stone, hard; Asphalt; Gravel	0 - 300	300	No	for 4-piece rotor high/low	2 pcs.	2592813

Original KLEEMANN

CRUSHING TOOLS FOR IMPACT CRUSHERS

BLOW BARS											
Series code	Serial code	Series range	Part	Version	Application	Feed size	Maximum feed size up to	Material with non-crushable content	Rotor	Package includes	Part no.
MR 110 EVO	K019	1 - 9999	Set of C-TRON CC blow bars	Chrome steel - ceramic	Building rubble, mixed; Natural stone, medium-hard; Natural stone, hard; Asphalt; Gravel	0 - 300	300	No	for 3-piece rotor	3 pcs.	2592817
				Chrome steel - ceramic	Building rubble, mixed; Natural stone, medium-hard; Natural stone, hard; Asphalt; Gravel	0 - 300	300	No	for 4-piece rotor	4 pcs.	2604415
			Set of C-TRON M blow bars	Martensitic steel	Soft natural stone; Building rubble, mixed	0 - 700	700	Yes	for 4-piece rotor high/low	2 pcs.	2592778
				Martensitic steel	Soft natural stone; Building rubble, mixed	0 - 700	700	Yes	for 3-piece rotor	3 pcs.	2592786

BLOW BARS

Series code	Serial code	Series range	Part	Version	Application	Feed size	Maximum feed size up to	Material with non-crushable content	Rotor	Package includes	Part no.
MR 110 EVO	K019	1 - 9999	Set of C-TRON M blow bars	Martensitic steel	Soft natural stone; Building rubble, mixed	0 - 700	700	Yes	for 4-piece rotor	4 pcs.	2604463
			Set of C-TRON MC+ blow bars	Martensite-ceramic premium	Building rubble, mixed; Reinforced concrete; Natural stone, medium-hard; Natural stone, hard; Asphalt; Gravel	0 - 500	500	Yes	for 3-piece rotor	3 pcs.	2593773
				Martensite-ceramic premium	Building rubble, mixed; Reinforced concrete; Natural stone, medium-hard; Natural stone, hard; Asphalt; Gravel	0 - 500	500	Yes	for 4-piece rotor	4 pcs.	2642126

Original KLEEMANN

CRUSHING TOOLS FOR IMPACT CRUSHERS

BLOW BARS											
Series code	Serial code	Series range	Part	Version	Application	Feed size	Maximum feed size up to	Material with non-crushable content	Rotor	Package includes	Part no.
MR 110 EVO	K019	1 - 9999	Set of C-TRON MC+ blow bars	Martensite-ceramic premium	Building rubble, mixed; Reinforced concrete; Natural stone, medium-hard; Natural stone, hard; Asphalt; Gravel	0 - 500	500	Yes	for 4-piece rotor high/low	2 pcs.	2593767
			Set of C-TRON Mn blow bars	Manganese steel	Soft natural stone	0 - 700	700	Yes	for 4-piece rotor high/low	2 pcs.	2592682
				Manganese steel	Soft natural stone	0 - 700	700	Yes	for 3-piece rotor	3 pcs.	2592766
				Manganese steel	Soft natural stone	0 - 700	700	Yes	for 4-piece rotor	4 pcs.	2604514

BLOW BARS

Series code	Serial code	Series range	Part	Version	Application	Feed size	Maximum feed size up to	Material with non-crushable content	Rotor	Package includes	Part no.
MR 110 EVO	K019	1 - 9999	Set of MartXtra blow bars	Martensite-ceramic premium	Building rubble, mixed; Reinforced concrete; Natural stone, medium-hard; Natural stone, hard; Asphalt; Gravel	0 - 700	700	Yes	for 4-piece rotor	4 pcs.	2604420
MR 122 PRO	K062	1 - 9999	Set of CHROMXPERT blow bars	Chrome steel - ceramic	Building rubble, mixed; Natural stone, medium-hard; Natural stone, hard; Asphalt; Gravel	0 - 300	300	No	for 4-piece rotor	4 pcs.	2632169

CRUSHING TOOLS FOR IMPACT CRUSHERS

BLOW BARS											
Series code	Serial code	Series range	Part	Version	Application	Feed size	Maximum feed size up to	Material with non-crushable content	Rotor	Package includes	Part no.
MR 122 PRO	K062	1 - 9999	Set of MartXtra blow bars	Martensite-ceramic premium	Building rubble, mixed; Reinforced concrete; Natural stone, medium-hard; Natural stone, hard; Asphalt; Gravel	0 - 500	500	Yes	for 4-piece rotor high/low	2 pcs.	2592865
				Martensite-ceramic premium	Building rubble, mixed; Reinforced concrete; Natural stone, medium-hard; Natural stone, hard; Asphalt; Gravel	0 - 700	700	Yes	for 4-piece rotor	4 pcs.	2604431
			Set of X-TRON M blow bars	Martensitic steel	Soft natural stone; Building rubble, mixed	0 - 700	700	Yes	for 4-piece rotor	4 pcs.	2604437

BLOW BARS

Series code	Serial code	Series range	Part	Version	Application	Feed size	Maximum feed size up to	Material with non-crushable content	Rotor	Package includes	Part no.
MR 122 PRO	K062	1 - 9999	Set of X-TRON M blow bars	Martensitic steel	Soft natural stone; Building rubble, mixed	0 - 700	700	Yes	for 4-piece rotor high/low	2 pcs.	2592848
			Set of X-TRON MC+ blow bars	Martensite-ceramic premium	Building rubble, mixed; Reinforced concrete; Natural stone, medium-hard; Natural stone, hard; Asphalt; Gravel	0 - 500	500	Yes	for 4-piece rotor high/low	2 pcs.	2593900
				Martensite-ceramic premium	Building rubble, mixed; Reinforced concrete; Natural stone, medium-hard; Natural stone, hard; Asphalt; Gravel	0 - 500	500	Yes	for 4-piece rotor	4 pcs.	2642135

CRUSHING TOOLS FOR IMPACT CRUSHERS

BLOW BARS

Series code	Serial code	Series range	Part	Version	Application	Feed size	Maximum feed size up to	Material with non-crushable content	Rotor	Package includes	Part no.
MR 122 PRO	K062	1 - 9999	Set of X-TRON Mn blow bars	Manganese steel	Soft natural stone	0 - 700	700	Yes	for 4-piece rotor	4 pcs.	2604434
				Manganese steel	Soft natural stone	0 - 700	700	Yes	for 4-piece rotor high/low	2 pcs.	2592844
MR 130 R EVO	K023	1 - 199	Set of CHROMXPERT blow bars	Chrome steel - ceramic	Building rubble, mixed; Natural stone, medium-hard; Natural stone, hard; Asphalt; Gravel	0 - 300	300	No	for 4-piece rotor	4 pcs.	2604457
			Set of MartXtra blow bars	Martensite-ceramic premium	Building rubble, mixed; Reinforced concrete; Natural stone, medium-hard; Natural stone, hard; Asphalt; Gravel	0 - 700	700	Yes	for 4-piece rotor	4 pcs.	2605041

BLOW BARS

Series code	Serial code	Series range	Part	Version	Application	Feed size	Maximum feed size up to	Material with non-crushable content	Rotor	Package includes	Part no.
MR 130 R EVO	K023	1 - 199	Set of S-TRON C blow bars	Chrome steel	Building rubble, mixed; Natural stone, medium-hard; Reinforced concrete; Natural stone, hard; Asphalt	0 - 400	400	No	for 4-piece rotor high/low	2 pcs.	2592941
				Chrome steel	Building rubble, mixed; Natural stone, medium-hard; Reinforced concrete; Natural stone, hard; Asphalt	0 - 400	400	No	for 3-piece rotor	3 pcs.	2592948

CRUSHING TOOLS FOR IMPACT CRUSHERS

BLOW BARS											
Series code	Serial code	Series range	Part	Version	Application	Feed size	Maximum feed size up to	Material with non-crushable content	Rotor	Package includes	Part no.
MR 130 R EVO	K023	1 - 199	Set of S-TRON C blow bars	Chrome steel	Building rubble, mixed; Natural stone, medium-hard; Reinforced concrete; Natural stone, hard; Asphalt	0 - 400	400	No	for 4-piece rotor	4 pcs.	2604350
			Set of S-TRON CC blow bars	Chrome steel - ceramic	Building rubble, mixed; Natural stone, medium-hard; Natural stone, hard; Asphalt; Gravel	0 - 300	300	No	for 4-piece rotor	4 pcs.	2605037

BLOW BARS

Series code	Serial code	Series range	Part	Version	Application	Feed size	Maximum feed size up to	Material with non-crushable content	Rotor	Package includes	Part no.
MR 130 R EVO	K023	1 - 199	Set of S-TRON CC blow bars	Chrome steel - ceramic	Building rubble, mixed; Natural stone, medium-hard; Natural stone, hard; Asphalt; Gravel	0 - 300	300	No	for 3-piece rotor	3 pcs.	2592988
				Chrome steel - ceramic	Building rubble, mixed; Natural stone, medium-hard; Natural stone, hard; Asphalt; Gravel	0 - 300	300	No	for 4-piece rotor high/low	2 pcs.	2592949
			Set of S-TRON M blow bars	Martensitic steel	Soft natural stone; Building rubble, mixed	0 - 700	700	Yes	for 4-piece rotor high/low	2 pcs.	2592897
				Martensitic steel	Soft natural stone; Building rubble, mixed	0 - 700	700	Yes	for 4-piece rotor	4 pcs.	2604445

Original KLEEMANN

CRUSHING TOOLS FOR IMPACT CRUSHERS

BLOW BARS											
Series code	Serial code	Series range	Part	Version	Application	Feed size	Maximum feed size up to	Material with non-crushable content	Rotor	Package includes	Part no.
MR 130 R EVO	K023	1 - 199	Set of S-TRON M blow bars	Martensitic steel	Soft natural stone; Building rubble, mixed	0 - 700	700	Yes	for 3-piece rotor	3 pcs.	2592906
			Set of S-TRON Mn blow bars	Manganese steel	Soft natural stone	0 - 700	700	Yes	for 3-piece rotor	3 pcs.	2592884
				Manganese steel	Soft natural stone	0 - 700	700	Yes	for 4-piece rotor high/low	2 pcs.	2592876
				Manganese steel	Soft natural stone	0 - 700	700	Yes	for 4-piece rotor	4 pcs.	2604447
		200 - 9999	Set of CHROMXPERT blow bars	Chrome steel - ceramic	Building rubble, mixed; Natural stone, medium-hard; Natural stone, hard; Asphalt; Gravel	0 - 300	300	No	for 4-piece rotor	4 pcs.	2604430

BLOW BARS

Series code	Serial code	Series range	Part	Version	Application	Feed size	Maximum feed size up to	Material with non-crushable content	Rotor	Package includes	Part no.
MR 130 R EVO	K023	200 - 9999	Set of C-TRON C blow bars	Chrome steel	Building rubble, mixed; Natural stone, medium-hard; Reinforced concrete; Natural stone, hard; Asphalt	0 - 400	400	No	for 4-piece rotor	4 pcs.	2604366
			Set of C-TRON CC blow bars	Chrome steel - ceramic	Building rubble, mixed; Natural stone, medium-hard; Natural stone, hard; Asphalt; Gravel	0 - 300	300	No	for 4-piece rotor	4 pcs.	2604356

Original KLEEMANN

CRUSHING TOOLS FOR IMPACT CRUSHERS

BLOW BARS											
Series code	Serial code	Series range	Part	Version	Application	Feed size	Maximum feed size up to	Material with non-crushable content	Rotor	Package includes	Part no.
MR 130 R EVO	K023	200 - 9999	Set of C-TRON CC blow bars	Chrome steel - ceramic	Building rubble, mixed; Natural stone, medium-hard; Natural stone, hard; Asphalt; Gravel	0 - 300	300	No	for 4-piece rotor high/low	2 pcs.	2593029
			Set of C-TRON M blow bars	Martensitic steel	Soft natural stone; Building rubble, mixed	0 - 700	700	Yes	for 4-piece rotor high/low	2 pcs.	2593014
				Martensitic steel	Soft natural stone; Building rubble, mixed	0 - 700	700	Yes	for 4-piece rotor	4 pcs.	2604466

BLOW BARS

Series code	Serial code	Series range	Part	Version	Application	Feed size	Maximum feed size up to	Material with non-crushable content	Rotor	Package includes	Part no.
MR 130 R EVO	K023	200 - 9999	Set of C-TRON MC+ blow bars	Martensite-ceramic premium	Building rubble, mixed; Reinforced concrete; Natural stone, medium-hard; Natural stone, hard; Asphalt; Gravel	0 - 500	500	Yes	for 4-piece rotor	4 pcs.	2642118
				Martensite-ceramic premium	Building rubble, mixed; Reinforced concrete; Natural stone, medium-hard; Natural stone, hard; Asphalt; Gravel	0 - 700	700	Yes	for 4-piece rotor high/low	2 pcs.	2593945
			Set of C-TRON Mn blow bars	Manganese steel	Soft natural stone	0 - 700	700	Yes	for 4-piece rotor high/low	2 pcs.	2593010

Original KLEEMANN

CRUSHING TOOLS FOR IMPACT CRUSHERS

BLOW BARS											
Series code	Serial code	Series range	Part	Version	Application	Feed size	Maximum feed size up to	Material with non-crushable content	Rotor	Package includes	Part no.
MR 130 R EVO	K023	200 - 9999	Set of C-TRON Mn blow bars	Manganese steel	Soft natural stone	0 - 700	700	Yes	for 4-piece rotor	4 pcs.	2604522
			Set of MartXtra blow bars	Martensite-ceramic premium	Building rubble, mixed; Reinforced concrete; Natural stone, medium-hard; Natural stone, hard; Asphalt; Gravel	0 - 700	700	Yes	for 4-piece rotor	4 pcs.	2604428
MR 130 Z EVO	K024	1 - 299	Set of CHROMXPERT blow bars	Chrome steel - ceramic	Building rubble, mixed; Natural stone, medium-hard; Natural stone, hard; Asphalt; Gravel	0 - 300	300	No	for 4-piece rotor	4 pcs.	2604457

BLOW BARS

Series code	Serial code	Series range	Part	Version	Application	Feed size	Maximum feed size up to	Material with non-crushable content	Rotor	Package includes	Part no.
MR 130 Z EVO	K024	1 - 299	Set of MartXtra blow bars	Martensite-ceramic premium	Building rubble, mixed; Reinforced concrete; Natural stone, medium-hard; Natural stone, hard; Asphalt; Gravel	0 - 700	700	Yes	for 4-piece rotor	4 pcs.	2605041
			Set of S-TRON C blow bars	Chrome steel	Building rubble, mixed; Natural stone, medium-hard; Reinforced concrete; Natural stone, hard; Asphalt	0 - 400	400	No	for 4-piece rotor high/low	2 pcs.	2592941

CRUSHING TOOLS FOR IMPACT CRUSHERS

BLOW BARS											
Series code	Serial code	Series range	Part	Version	Application	Feed size	Maximum feed size up to	Material with non-crushable content	Rotor	Package includes	Part no.
MR 130 Z EVO	K024	1 - 299	Set of S-TRON C blow bars	Chrome steel	Building rubble, mixed; Natural stone, medium-hard; Reinforced concrete; Natural stone, hard; Asphalt	0 - 400	400	No	for 3-piece rotor	3 pcs.	2592948
				Chrome steel	Building rubble, mixed; Natural stone, medium-hard; Reinforced concrete; Natural stone, hard; Asphalt	0 - 400	400	No	for 4-piece rotor	4 pcs.	2604350

BLOW BARS

Series code	Serial code	Series range	Part	Version	Application	Feed size	Maximum feed size up to	Material with non-crushable content	Rotor	Package includes	Part no.
MR 130 Z EVO	K024	1 - 299	Set of S-TRON CC blow bars	Chrome steel - ceramic	Building rubble, mixed; Natural stone, medium-hard; Natural stone, hard; Asphalt; Gravel	0 - 300	300	No	for 3-piece rotor	3 pcs.	2592988
				Chrome steel - ceramic	Building rubble, mixed; Natural stone, medium-hard; Natural stone, hard; Asphalt; Gravel	0 - 300	300	No	for 4-piece rotor	4 pcs.	2605037
				Chrome steel - ceramic	Building rubble, mixed; Natural stone, medium-hard; Natural stone, hard; Asphalt; Gravel	0 - 300	300	No	for 4-piece rotor high/low	2 pcs.	2592949

CRUSHING TOOLS FOR IMPACT CRUSHERS

BLOW BARS											
Series code	Serial code	Series range	Part	Version	Application	Feed size	Maximum feed size up to	Material with non-crushable content	Rotor	Package includes	Part no.
MR 130 Z EVO	K024	1 - 299	Set of S-TRON M blow bars	Martensitic steel	Soft natural stone; Building rubble, mixed	0 - 700	700	Yes	for 4-piece rotor high/low	2 pcs.	2592897
				Martensitic steel	Soft natural stone; Building rubble, mixed	0 - 700	700	Yes	for 4-piece rotor	4 pcs.	2604445
				Martensitic steel	Soft natural stone; Building rubble, mixed	0 - 700	700	Yes	for 3-piece rotor	3 pcs.	2592906
			Set of S-TRON Mn blow bars	Manganese steel	Soft natural stone	0 - 700	700	Yes	for 4-piece rotor	4 pcs.	2604447
				Manganese steel	Soft natural stone	0 - 700	700	Yes	for 4-piece rotor high/low	2 pcs.	2592876
				Manganese steel	Soft natural stone	0 - 700	700	Yes	for 3-piece rotor	3 pcs.	2592884

BLOW BARS

Series code	Serial code	Series range	Part	Version	Application	Feed size	Maximum feed size up to	Material with non-crushable content	Rotor	Package includes	Part no.
MR 130 Z EVO	K024	301 - 9999	Set of CHROMXPERT blow bars	Chrome steel - ceramic	Building rubble, mixed; Natural stone, medium-hard; Natural stone, hard; Asphalt; Gravel	0 - 300	300	No	for 4-piece rotor	4 pcs.	2604430
			Set of C-TRON C blow bars	Chrome steel	Building rubble, mixed; Natural stone, medium-hard; Reinforced concrete; Natural stone, hard; Asphalt	0 - 400	400	No	for 4-piece rotor	4 pcs.	2604366

CRUSHING TOOLS FOR IMPACT CRUSHERS

BLOW BARS											
Series code	Serial code	Series range	Part	Version	Application	Feed size	Maximum feed size up to	Material with non-crushable content	Rotor	Package includes	Part no.
MR 130 Z EVO	K024	301 - 9999	Set of C-TRON CC blow bars	Chrome steel - ceramic	Building rubble, mixed; Natural stone, medium-hard; Natural stone, hard; Asphalt; Gravel	0 - 300	300	No	for 4-piece rotor high/low	2 pcs.	2593029
				Chrome steel - ceramic	Building rubble, mixed; Natural stone, medium-hard; Natural stone, hard; Asphalt; Gravel	0 - 300	300	No	for 4-piece rotor	4 pcs.	2604356
			Set of C-TRON M blow bars	Martensitic steel	Soft natural stone; Building rubble, mixed	0 - 700	700	Yes	for 4-piece rotor high/low	2 pcs.	2593014
				Martensitic steel	Soft natural stone; Building rubble, mixed	0 - 700	700	Yes	for 4-piece rotor	4 pcs.	2604466

BLOW BARS

Series code	Serial code	Series range	Part	Version	Application	Feed size	Maximum feed size up to	Material with non-crushable content	Rotor	Package includes	Part no.
MR 130 Z EVO	K024	301 - 9999	Set of C-TRON MC+ blow bars	Martensite-ceramic premium	Building rubble, mixed; Reinforced concrete; Natural stone, medium-hard; Natural stone, hard; Asphalt; Gravel	0 - 700	700	Yes	for 4-piece rotor high/low	2 pcs.	2593945
				Martensite-ceramic premium	Building rubble, mixed; Reinforced concrete; Natural stone, medium-hard; Natural stone, hard; Asphalt; Gravel	0 - 500	500	Yes	for 4-piece rotor	4 pcs.	2642118
			Set of C-TRON Mn blow bars	Manganese steel	Soft natural stone	0 - 700	700	Yes	for 4-piece rotor high/low	2 pcs.	2593010

Original KLEEMANN

CRUSHING TOOLS FOR IMPACT CRUSHERS

BLOW BARS											
Series code	Serial code	Series range	Part	Version	Application	Feed size	Maximum feed size up to	Material with non-crushable content	Rotor	Package includes	Part no.
MR 130 Z EVO	K024	301 - 9999	Set of C-TRON Mn blow bars	Manganese steel	Soft natural stone	0 - 700	700	Yes	for 4-piece rotor	4 pcs.	2604522
			Set of MartXtra blow bars	Martensite-ceramic premium	Building rubble, mixed; Reinforced concrete; Natural stone, medium-hard; Natural stone, hard; Asphalt; Gravel	0 - 700	700	Yes	for 4-piece rotor	4 pcs.	2604428
MR 130 EVO	K077, K078	1 - 9999	Set of CHROMXPERT blow bars	Chrome steel - ceramic	Building rubble, mixed; Natural stone, medium-hard; Natural stone, hard; Asphalt; Gravel	0 - 300	300	No	for 4-piece rotor	4 pcs.	2604430

BLOW BARS

Series code	Serial code	Series range	Part	Version	Application	Feed size	Maximum feed size up to	Material with non-crushable content	Rotor	Package includes	Part no.
MR 130 EVO	K077, K078	1 - 9999	Set of C-TRON C blow bars	Chrome steel	Building rubble, mixed; Natural stone, medium-hard; Reinforced concrete; Natural stone, hard; Asphalt	0 - 400	400	No	for 4-piece rotor	4 pcs.	2604366
			Set of C-TRON CC blow bars	Chrome steel - ceramic	Building rubble, mixed; Natural stone, medium-hard; Natural stone, hard; Asphalt; Gravel	0 - 300	300	No	for 4-piece rotor high/low	2 pcs.	2593029

CRUSHING TOOLS FOR IMPACT CRUSHERS

BLOW BARS											
Series code	Serial code	Series range	Part	Version	Application	Feed size	Maximum feed size up to	Material with non-crushable content	Rotor	Package includes	Part no.
MR 130 EVO	K077, K078	1 - 9999	Set of C-TRON CC blow bars	Chrome steel - ceramic	Building rubble, mixed; Natural stone, medium-hard; Natural stone, hard; Asphalt; Gravel	0 - 300	300	No	for 4-piece rotor	4 pcs.	2604356
			Set of C-TRON M blow bars	Martensitic steel	Soft natural stone; Building rubble, mixed	0 - 700	700	Yes	for 4-piece rotor high/low	2 pcs.	2593014
				Martensitic steel	Soft natural stone; Building rubble, mixed	0 - 700	700	Yes	for 4-piece rotor	4 pcs.	2604466

BLOW BARS

Series code	Serial code	Series range	Part	Version	Application	Feed size	Maximum feed size up to	Material with non-crushable content	Rotor	Package includes	Part no.
MR 130 EVO	K077, K078	1 - 9999	Set of C-TRON MC+ blow bars	Martensite-ceramic premium	Building rubble, mixed; Reinforced concrete; Natural stone, medium-hard; Natural stone, hard; Asphalt; Gravel	0 - 700	700	Yes	for 4-piece rotor high/low	2 pcs.	2593945
				Martensite-ceramic premium	Building rubble, mixed; Reinforced concrete; Natural stone, medium-hard; Natural stone, hard; Asphalt; Gravel	0 - 500	500	Yes	for 4-piece rotor	4 pcs.	2642118
			Set of C-TRON Mn blow bars	Manganese steel	Soft natural stone	0 - 700	700	Yes	for 4-piece rotor high/low	2 pcs.	2593010

CRUSHING TOOLS FOR IMPACT CRUSHERS

BLOW BARS

Series code	Serial code	Series range	Part	Version	Application	Feed size	Maximum feed size up to	Material with non-crushable content	Rotor	Package includes	Part no.
MR 130 EVO	K077, K078	1 - 9999	Set of C-TRON Mn blow bars	Manganese steel	Soft natural stone	0 - 700	700	Yes	for 4-piece rotor	4 pcs.	2604522
			Set of MartXtra blow bars	Martensite-ceramic premium	Building rubble, mixed; Reinforced concrete; Natural stone, medium-hard; Natural stone, hard; Asphalt; Gravel	0 - 700	700	Yes	for 4-piece rotor	4 pcs.	2604428
MR 150 PRO	K063	1 - 9999	Set of MartXtra blow bars	Martensite-ceramic premium	Building rubble, mixed; Reinforced concrete; Natural stone, medium-hard; Natural stone, hard; Asphalt; Gravel	0 - 700	700	Yes	for 4-piece rotor high/low	2 pcs.	2727228

BLOW BARS

Series code	Serial code	Series range	Part	Version	Application	Feed size	Maximum feed size up to	Material with non-crushable content	Rotor	Package includes	Part no.
MR 150 PRO	K063	1 - 9999	Set of X-TRON M blow bars	Martensitic steel	Soft natural stone; Building rubble, mixed	0 - 700	700	Yes	for 4-piece rotor	4 pcs.	2605006
				Martensitic steel	Soft natural stone; Building rubble, mixed	0 - 700	700	Yes	for 4-piece rotor high/low	2 pcs.	2593051
			Set of X-TRON Mn blow bars	Manganese steel	Soft natural stone	0 - 700	700	Yes	for 4-piece rotor	4 pcs.	2604991
				Manganese steel	Soft natural stone	0 - 700	700	Yes	for 4-piece rotor high/low	2 pcs.	2593049
MR 170 PRO	K033	1 - 9999	Set of X-TRON M blow bars	Martensitic steel	Soft natural stone; Building rubble, mixed	0 - 700	700	Yes	for 4-piece rotor high/low	2 pcs.	2594150
			Set of X-TRON Mn blow bars	Manganese steel	Soft natural stone	0 - 700	700	Yes	for 4-piece rotor high/low	2 pcs.	2594143
				Manganese steel	Soft natural stone	0 - 700	700	Yes	for 4-piece rotor	4 pcs.	2636638

CRUSHING TOOLS FOR IMPACT CRUSHERS

BLOW BARS											
Series code	Serial code	Series range	Part	Version	Application	Feed size	Maximum feed size up to	Material with non-crushable content	Rotor	Package includes	Part no.
MR 122i PRO	K031	1 - 9999	Set of CHROMXPERT blow bars	Chrome steel - ceramic	Building rubble, mixed; Natural stone, medium-hard; Natural stone, hard; Asphalt; Gravel	0 - 300	300	No	for 4-piece rotor	4 pcs.	2632169
			Set of MartXtra blow bars	Martensite-ceramic premium	Building rubble, mixed; Reinforced concrete; Natural stone, medium-hard; Natural stone, hard; Asphalt; Gravel	0 - 500	500	Yes	for 4-piece rotor high/low	2 pcs.	2592865

BLOW BARS

Series code	Serial code	Series range	Part	Version	Application	Feed size	Maximum feed size up to	Material with non-crushable content	Rotor	Package includes	Part no.
MR 122i PRO	K031	1 - 9999	Set of MartX-tra blow bars	Martensite-ceramic premium	Building rubble, mixed; Reinforced concrete; Natural stone, medium-hard; Natural stone, hard; Asphalt; Gravel	0 - 700	700	Yes	for 4-piece rotor	4 pcs.	2604431
			Set of X-TRON M blow bars	Martensitic steel	Soft natural stone; Building rubble, mixed	0 - 700	700	Yes	for 4-piece rotor	4 pcs.	2604437
				Martensitic steel	Soft natural stone; Building rubble, mixed	0 - 700	700	Yes	for 4-piece rotor high/low	2 pcs.	2592848

CRUSHING TOOLS FOR IMPACT CRUSHERS

BLOW BARS											
Series code	Serial code	Series range	Part	Version	Application	Feed size	Maximum feed size up to	Material with non-crushable content	Rotor	Package includes	Part no.
MR 122i PRO	K031	1 - 9999	Set of X-TRON MC+ blow bars	Martensite-ceramic premium	Building rubble, mixed; Reinforced concrete; Natural stone, medium-hard; Natural stone, hard; Asphalt; Gravel	0 - 500	500	Yes	for 4-piece rotor high/low	2 pcs.	2593900
				Martensite-ceramic premium	Building rubble, mixed; Reinforced concrete; Natural stone, medium-hard; Natural stone, hard; Asphalt; Gravel	0 - 500	500	Yes	for 4-piece rotor	4 pcs.	2642135
			Set of X-TRON Mn blow bars	Manganese steel	Soft natural stone	0 - 700	700	Yes	for 4-piece rotor high/low	2 pcs.	2592844

BLOW BARS

Series code	Serial code	Series range	Part	Version	Application	Feed size	Maximum feed size up to	Material with non-crushable content	Rotor	Package includes	Part no.
MR 122i PRO	K031	1 - 9999	Set of X-TRON Mn blow bars	Manganese steel	Soft natural stone	0 - 700	700	Yes	for 4-piece rotor	4 pcs.	2604434
MR 130 PRO	K125	1 - 9999	Set of CHROMXPERT blow bars	Chrome steel - ceramic	Building rubble, mixed; Natural stone, medium-hard; Natural stone, hard; Asphalt; Gravel	0 - 300	300	No	for 4-piece rotor	4 pcs.	2604430
			Set of C-TRON C blow bars	Chrome steel	Building rubble, mixed; Natural stone, medium-hard; Reinforced concrete; Natural stone, hard; Asphalt	0 - 400	400	No	for 4-piece rotor	4 pcs.	2604366

Original KLEEMANN

CRUSHING TOOLS FOR IMPACT CRUSHERS

BLOW BARS

Series code	Serial code	Series range	Part	Version	Application	Feed size	Maximum feed size up to	Material with non-crushable content	Rotor	Package includes	Part no.
MR 130 PRO	K125	1 - 9999	Set of C-TRON CC blow bars	Chrome steel - ceramic	Building rubble, mixed; Natural stone, medium-hard; Natural stone, hard; Asphalt; Gravel	0 - 300	300	No	for 4-piece rotor high/low	2 pcs.	2593029
				Chrome steel - ceramic	Building rubble, mixed; Natural stone, medium-hard; Natural stone, hard; Asphalt; Gravel	0 - 300	300	No	for 4-piece rotor	4 pcs.	2604356
			Set of C-TRON M blow bars	Martensitic steel	Soft natural stone; Building rubble, mixed	0 - 700	700	Yes	for 4-piece rotor	4 pcs.	2604466
				Martensitic steel	Soft natural stone; Building rubble, mixed	0 - 700	700	Yes	for 4-piece rotor high/low	2 pcs.	2593014

BLOW BARS

Series code	Serial code	Series range	Part	Version	Application	Feed size	Maximum feed size up to	Material with non-crushable content	Rotor	Package includes	Part no.
MR 130 PRO	K125	1 - 9999	Set of C-TRON MC+ blow bars	Martensite-ceramic premium	Building rubble, mixed; Reinforced concrete; Natural stone, medium-hard; Natural stone, hard; Asphalt; Gravel	0 - 700	700	Yes	for 4-piece rotor high/low	2 pcs.	2593945
				Martensite-ceramic premium	Building rubble, mixed; Reinforced concrete; Natural stone, medium-hard; Natural stone, hard; Asphalt; Gravel	0 - 500	500	Yes	for 4-piece rotor	4 pcs.	2642118
			Set of C-TRON Mn blow bars	Manganese steel	Soft natural stone	0 - 700	700	Yes	for 4-piece rotor high/low	2 pcs.	2593010

CRUSHING TOOLS FOR IMPACT CRUSHERS

BLOW BARS

Series code	Serial code	Series range	Part	Version	Application	Feed size	Maximum feed size up to	Material with non-crushable content	Rotor	Package includes	Part no.
MR 130 PRO	K125	1 - 9999	Set of C-TRON Mn blow bars	Manganese steel	Soft natural stone	0 - 700	700	Yes	for 4-piece rotor	4 pcs.	2604522
			Set of MartXtra blow bars	Martensite-ceramic premium	Building rubble, mixed; Reinforced concrete; Natural stone, medium-hard; Natural stone, hard; Asphalt; Gravel	0 - 700	700	Yes	for 4-piece rotor	4 pcs.	2604428
	K124	1 - 9999	Set of CHROMXPERT blow bars	Chrome steel - ceramic	Building rubble, mixed; Natural stone, medium-hard; Natural stone, hard; Asphalt; Gravel	0 - 300	300	No	for 4-piece rotor	4 pcs.	2604430

BLOW BARS

Series code	Serial code	Series range	Part	Version	Application	Feed size	Maximum feed size up to	Material with non-crushable content	Rotor	Package includes	Part no.
MR 130 PRO	K124	1 - 9999	Set of C-TRON C blow bars	Chrome steel	Building rubble, mixed; Natural stone, medium-hard; Reinforced concrete; Natural stone, hard; Asphalt	0 - 400	400	No	for 4-piece rotor	4 pcs.	2604366
			Set of C-TRON CC blow bars	Chrome steel - ceramic	Building rubble, mixed; Natural stone, medium-hard; Natural stone, hard; Asphalt; Gravel	0 - 300	300	No	for 4-piece rotor	4 pcs.	2604356

Original KLEEMANN

CRUSHING TOOLS FOR IMPACT CRUSHERS

BLOW BARS											
Series code	Serial code	Series range	Part	Version	Application	Feed size	Maximum feed size up to	Material with non-crushable content	Rotor	Package includes	Part no.
MR 130 PRO	K124	1 - 9999	Set of C-TRON CC blow bars	Chrome steel - ceramic	Building rubble, mixed; Natural stone, medium-hard; Natural stone, hard; Asphalt; Gravel	0 - 300	300	No	for 4-piece rotor high/low	2 pcs.	2593029
			Set of C-TRON M blow bars	Martensitic steel	Soft natural stone; Building rubble, mixed	0 - 700	700	Yes	for 4-piece rotor	4 pcs.	2604466
				Martensitic steel	Soft natural stone; Building rubble, mixed	0 - 700	700	Yes	for 4-piece rotor high/low	2 pcs.	2593014

BLOW BARS

Series code	Serial code	Series range	Part	Version	Application	Feed size	Maximum feed size up to	Material with non-crushable content	Rotor	Package includes	Part no.
MR 130 PRO	K124	1 - 9999	Set of C-TRON MC+ blow bars	Martensite-ceramic premium	Building rubble, mixed; Reinforced concrete; Natural stone, medium-hard; Natural stone, hard; Asphalt; Gravel	0 - 700	700	Yes	for 4-piece rotor high/low	2 pcs.	2593945
				Martensite-ceramic premium	Building rubble, mixed; Reinforced concrete; Natural stone, medium-hard; Natural stone, hard; Asphalt; Gravel	0 - 500	500	Yes	for 4-piece rotor	4 pcs.	2642118

Original KLEEMANN

CRUSHING TOOLS FOR IMPACT CRUSHERS

BLOW BARS											
Series code	Serial code	Series range	Part	Version	Application	Feed size	Maximum feed size up to	Material with non-crushable content	Rotor	Package includes	Part no.
MR 130 PRO	K124	1 - 9999	Set of C-TRON Mn blow bars	Manganese steel	Soft natural stone	0 - 700	700	Yes	for 4-piece rotor	4 pcs.	2604522
				Manganese steel	Soft natural stone	0 - 700	700	Yes	for 4-piece rotor high/low	2 pcs.	2593010
			Set of MartXtra blow bars	Martensite-ceramic premium	Building rubble, mixed; Reinforced concrete; Natural stone, medium-hard; Natural stone, hard; Asphalt; Gravel	0 - 700	700	Yes	for 4-piece rotor	4 pcs.	2604428
MR 100 NEO	K136		Set of C-TRON C blow bars	Chrome steel	Building rubble, mixed; Natural stone, hard; Natural stone, medium-hard; Reinforced concrete; Asphalt	0 - 400	400	No	for 4-piece rotor high/low	2 pcs.	WX3155492

BLOW BARS

Series code	Serial code	Series range	Part	Version	Application	Feed size	Maximum feed size up to	Material with non-crushable content	Rotor	Package includes	Part no.
MR 100 NEO	K136	1 - 9999	Set of C-TRON CC blow bars	Chrome steel - ceramic	Building rubble, mixed; Natural stone, medium-hard; Gravel; Asphalt; Natural stone, hard	0 - 300	300	No	for 4-piece rotor high/low	2 pcs.	WX3155490
			Set of C-TRON MC+ blow bars	Martensite-ceramic premium	Building rubble, mixed; Reinforced concrete; Natural stone, medium-hard; Natural stone, hard; Asphalt; Gravel	0 - 500	500	Yes	for 4-piece rotor high/low	2 pcs.	3044526

Original KLEEMANN

CRUSHING TOOLS FOR IMPACT CRUSHERS

BLOW BARS											
Series code	Serial code	Series range	Part	Version	Application	Feed size	Maximum feed size up to	Material with non-crushable content	Rotor	Package includes	Part no.
MR 100 NEOe	K138		Set of C-TRON C blow bars	Chrome steel	Building rubble, mixed; Natural stone, hard; Natural stone, medium-hard; Reinforced concrete; Asphalt	0 - 400	400	No	for 4-piece rotor high/low	2 pcs.	WX3155492
			Set of C-TRON CC blow bars	Chrome steel - ceramic	Building rubble, mixed; Natural stone, medium-hard; Gravel; Asphalt; Natural stone, hard	0 - 300	300	No	for 4-piece rotor high/low	2 pcs.	WX3155490

BLOW BARS

Series code	Serial code	Series range	Part	Version	Application	Feed size	Maximum feed size up to	Material with non-crushable content	Rotor	Package includes	Part no.
MR 100 NEOe	K138		Set of C-TRON MC+ blow bars	Martensite-ceramic premium	Building rubble, mixed; Reinforced concrete; Natural stone, medium-hard; Natural stone, hard; Asphalt; Gravel	0 - 500	500	Yes	for 4-piece rotor high/low	2 pcs.	3044526
MR 100 NEO	K135		Set of C-TRON C blow bars	Chrome steel	Building rubble, mixed; Natural stone, hard; Natural stone, medium-hard; Reinforced concrete; Asphalt	0 - 400	400	No	for 4-piece rotor high/low	2 pcs.	WX3155492

Original KLEEMANN

CRUSHING TOOLS FOR IMPACT CRUSHERS

BLOW BARS											
Series code	Serial code	Series range	Part	Version	Application	Feed size	Maximum feed size up to	Material with non-crushable content	Rotor	Package includes	Part no.
MR 100 NEO	K135	1 - 9999	Set of C-TRON CC blow bars	Chrome steel - ceramic	Building rubble, mixed; Natural stone, medium-hard; Gravel; Asphalt; Natural stone, hard	0 - 300	300	No	for 4-piece rotor high/low	2 pcs.	WX3155490
			Set of C-TRON MC+ blow bars	Martensite-ceramic premium	Building rubble, mixed; Reinforced concrete; Natural stone, medium-hard; Natural stone, hard; Asphalt; Gravel	0 - 500	500	Yes	for 4-piece rotor high/low	2 pcs.	3044526

BLOW BARS

Series code	Serial code	Series range	Part	Version	Application	Feed size	Maximum feed size up to	Material with non-crushable content	Rotor	Package includes	Part no.
MR 100 NEOe	K137		Set of C-TRON C blow bars	Chrome steel	Building rubble, mixed; Natural stone, hard; Natural stone, medium-hard; Reinforced concrete; Asphalt	0 - 400	400	No	for 4-piece rotor high/low	2 pcs.	WX3155492
			Set of C-TRON CC blow bars	Chrome steel - ceramic	Building rubble, mixed; Natural stone, medium-hard; Gravel; Asphalt; Natural stone, hard	0 - 300	300	No	for 4-piece rotor high/low	2 pcs.	WX3155490

CRUSHING TOOLS FOR IMPACT CRUSHERS

BLOW BARS											
Series code	Serial code	Series range	Part	Version	Application	Feed size	Maximum feed size up to	Material with non-crushable content	Rotor	Package includes	Part no.
MR 100 NEOe	K137		Set of C-TRON MC+ blow bars	Martensite-ceramic premium	Building rubble, mixed; Reinforced concrete; Natural stone, medium-hard; Natural stone, hard; Asphalt; Gravel	0 - 500	500	Yes	for 4-piece rotor high/low	2 pcs.	3044526

CRUSHING TOOLS FOR JAW CRUSHERS

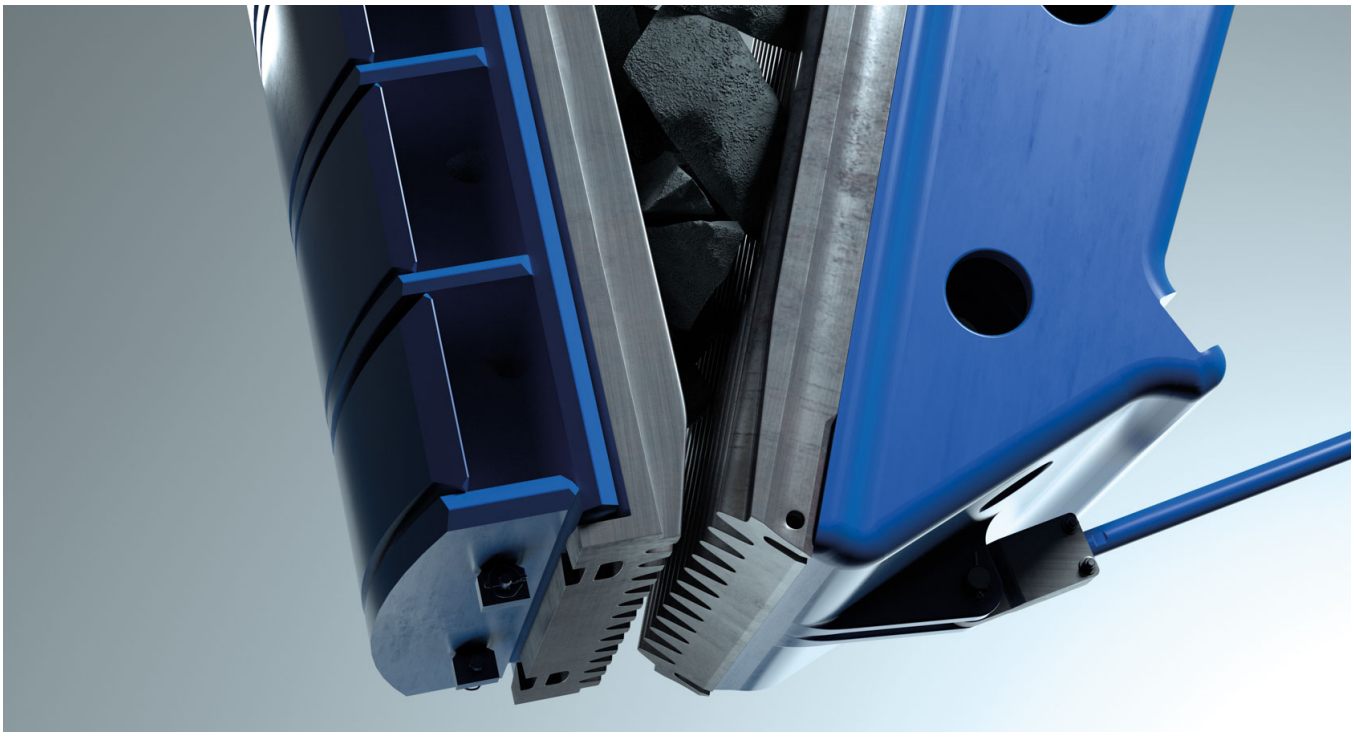

Crushing tools from KLEEMANN are made of special hard manganese steel which guarantees a long service life. The shape of the crusher is optimised for the lowest possible wear. A flattened transition from the prescreen and/or the feeding chute into the crushing chamber allows the material to be tipped into the crushing chamber without any obstacles. Thanks to the wide, raised, movable crusher jaw, the material cannot rest on top and less congestion occurs. The generously sized material tunnel, easily accessible from the side, additionally prevents blockages. The result is exceptional throughput and outstanding reliability.

> Read more online

Original KLEEMANN

CRUSHING TOOLS FOR JAW CRUSHERS

CRUSHER JAWS

Selecting the right crushing tools has a significant impact on achieving a satisfactory crushing result with low wear costs, and the quality of the steel has a considerable influence on the service life. Crushing tools from KLEEMANN are made of special hard manganese steel which guarantees a long service life.

CRUSHER JAWS

Series code	Serial code	Series range	Shape	Version	Type	Application/abrasiveness [g/t]	Application Type	Application/compressive strength	Part no.
MC 100 R	K001	1 - 9999	RT (regular-teeth)	RT-BITE 18	Fix	Medium (<600 g/t)	Universal; Recycling; Natural stone	<200 MPa	2419030
			RT (regular-teeth)	RT-BITE 20	Loose	Medium (>600 g/t)	Universal; Recycling; Natural stone	>200 MPa	2419008
			RT (regular-teeth)	RT-BITE 18	Loose	Medium (<600 g/t)	Universal; Recycling; Natural stone	<200 MPa	2418998
			RT (regular-teeth)	RT-BITE 20	Fix	Medium (>600 g/t)	Universal; Recycling; Natural stone	>200 MPa	2419045
MC 100 EVO	K002	1 - 9999	RT (regular-teeth)	RT-BITE 18	Fix	Medium (<600 g/t)	Universal; Recycling; Natural stone	<200 MPa	2419243
			RT (regular-teeth)	RT-BITE 20	Loose	Medium (>600 g/t)	Universal; Recycling; Natural stone	>200 MPa	2419231
			RT (regular-teeth)	RT-BITE 18	Loose	Medium (<600 g/t)	Universal; Recycling; Natural stone	<200 MPa	2419223
			RT (regular-teeth)	RT-BITE 20	Fix	Medium (>600 g/t)	Universal; Recycling; Natural stone	>200 MPa	2419248
			ST (sharp-teeth)	ST-BITE 18	Fix	Soft; Medium (<400 g/t)	Limestone; Sandstone; Recycling	<150 MPa	2337542

CRUSHER JAWS

Series code	Serial code	Series range	Shape	Version	Type	Application/abrasiveness [g/t]	Application Type	Application/compressive strength	Part no.
MC 100 EVO	K002	1 - 9999	ST (sharp-teeth)	ST-BITE 18	Loose	Soft; Medium (<400 g/t)	Limestone; Sandstone; Recycling	<150 MPa	2337527
	K011	1 - 9999	RT (regular-teeth)	RT-BITE 20	Loose	Medium (>600 g/t)	Universal; Recycling; Natural stone	>200 MPa	2419231
			RT (regular-teeth)	RT-BITE 18	Loose	Medium (<600 g/t)	Universal; Recycling; Natural stone	<200 MPa	2419223
			ST (sharp-teeth)	ST-BITE 18	Fix	Soft; Medium (<400 g/t)	Limestone; Sandstone; Recycling	<150 MPa	2337542
			ST (sharp-teeth)	ST-BITE 18	Loose	Soft; Medium (<400 g/t)	Limestone; Sandstone; Recycling	<150 MPa	2337527
			RT (regular-teeth)	RT-BITE 18	Fix	Medium (<600 g/t)	Universal; Recycling; Natural stone	<200 MPa	2419243
			RT (regular-teeth)	RT-BITE 20	Fix	Medium (>600 g/t)	Universal; Recycling; Natural stone	>200 MPa	2419248
MC 110 R EVO	K005	1 - 9999	ST (sharp-teeth)	ST-BITE 18	Loose	Soft; Medium (<400 g/t)	Limestone; Sandstone; Recycling	<150 MPa	2305309
			ST (sharp-teeth)	ST-BITE 18	Fix	Soft; Medium (<400 g/t)	Limestone; Sandstone; Recycling	<150 MPa	2305306
			MT (Multi Typ)	MT-BITE 18	Loose	Hard (>1000 g/t)	Natural stone	>200 MPa	2628287

CRUSHING TOOLS FOR JAW CRUSHERS

CRUSHER JAWS									
Series code	Serial code	Series range	Shape	Version	Type	Application/abrasiveness [g/t]	Application Type	Application/compressive strength	Part no.
MC 110 R EVO	K005	1 - 9999	FT (flat-teeth)	FT-BITE 24	Fix	Hard (>1000 g/t)	Natural stone	>250 MPa	2850433
			RT (regular-teeth)	RT-BITE 18	Loose	Medium (<600 g/t)	Universal; Recycling; Natural stone	<200 MPa	2419250
			RT (regular-teeth)	RT-BITE 20	Loose	Medium (>600 g/t)	Universal; Recycling; Natural stone	>200 MPa	2419251
			FT (flat-teeth)	FT-BITE 24	Loose	Hard (>1000 g/t)	Natural stone	>250 MPa	2850432
			RT (regular-teeth)	RT-BITE 20	Fix	Medium (>600 g/t)	Universal; Recycling; Natural stone	>200 MPa	2419253
			FT (flat-teeth)	FT-BITE 18	Loose	Hard (<1000 g/t); Medium (>800 g/t)	Natural stone	<200 MPa	2576471
			FT (flat-teeth)	FT-BITE 18	Fix	Hard (<1000 g/t); Medium (>800 g/t)	Natural stone	<200 MPa	2576472
			RT (regular-teeth)	RT-BITE 24	Loose	Hard (<1000 g/t); Medium (>800 g/t)	Universal; Recycling; Natural stone	>250 MPa	2795114
			RT (regular-teeth)	RT-BITE 24	Fix	Hard (<1000 g/t); Medium (>800 g/t)	Universal; Recycling; Natural stone	>250 MPa	2795133
			RT (regular-teeth)	RT-BITE 18	Fix	Medium (<600 g/t)	Universal; Recycling; Natural stone	<200 MPa	2419252
MC 110 Ri EVO	K014	1 - 9999	FT (flat-teeth)	FT-BITE 24	Fix	Hard (>1000 g/t)	Natural stone	>250 MPa	2850433
			FT (flat-teeth)	FT-BITE 18	Loose	Hard (<1000 g/t); Medium (>800 g/t)	Natural stone	<200 MPa	2576471
			RT (regular-teeth)	RT-BITE 20	Fix	Medium (>600 g/t)	Universal; Recycling; Natural stone	>200 MPa	2419253

CRUSHER JAWS

Series code	Serial code	Series range	Shape	Version	Type	Application/abrasiveness [g/t]	Application Type	Application/compressive strength	Part no.
MC 110 Ri EVO	K014	1 - 9999	RT (regular-teeth)	RT-BITE 18	Fix	Medium (<600 g/t)	Universal; Recycling; Natural stone	<200 MPa	2419252
			RT (regular-teeth)	RT-BITE 20	Loose	Medium (>600 g/t)	Universal; Recycling; Natural stone	>200 MPa	2419251
			RT (regular-teeth)	RT-BITE 18	Loose	Medium (<600 g/t)	Universal; Recycling; Natural stone	<200 MPa	2419250
			FT (flat-teeth)	FT-BITE 18	Fix	Hard (<1000 g/t); Medium (>800 g/t)	Natural stone	<200 MPa	2576472
			RT (regular-teeth)	RT-BITE 24	Fix	Hard (<1000 g/t); Medium (>800 g/t)	Universal; Recycling; Natural stone	>250 MPa	2795133
			ST (sharp-teeth)	ST-BITE 18	Fix	Soft; Medium (<400 g/t)	Limestone; Sandstone; Recycling	<150 MPa	2305306
			FT (flat-teeth)	FT-BITE 24	Loose	Hard (>1000 g/t)	Natural stone	>250 MPa	2850432
			RT (regular-teeth)	RT-BITE 24	Loose	Hard (<1000 g/t); Medium (>800 g/t)	Universal; Recycling; Natural stone	>250 MPa	2795114
			MT (Multi Typ)	MT-BITE 18	Loose	Hard (>1000 g/t)	Natural stone	>200 MPa	2628287
			ST (sharp-teeth)	ST-BITE 18	Loose	Soft; Medium (<400 g/t)	Limestone; Sandstone; Recycling	<150 MPa	2305309
MC 110 Z	K004	1 - 9999	RT (regular-teeth)	RT-BITE 18	Fix	Medium (<600 g/t)	Universal; Recycling; Natural stone	<200 MPa	2292016
			RT (regular-teeth)	RT-BITE 18	Loose	Medium (<600 g/t)	Universal; Recycling; Natural stone	<200 MPa	2292019

Original KLEEMANN

CRUSHING TOOLS FOR JAW CRUSHERS

CRUSHER JAWS									
Series code	Serial code	Series range	Shape	Version	Type	Application/abrasiveness [g/t]	Application Type	Application/compressive strength	Part no.
MC 110 Z	K004	1 - 9999	RT (regular-teeth)	RT-BITE 20	Loose	Medium (>600 g/t)	Universal; Recycling; Natural stone	>200 MPa	2412269
			RT (regular-teeth)	RT-BITE 20	Fix	Medium (>600 g/t)	Universal; Recycling; Natural stone	>200 MPa	2412228
MC 110 Z EVO	K006	1 - 9999	ST (sharp-teeth)	ST-BITE 18	Fix	Soft; Medium (<400 g/t)	Limestone; Sandstone; Recycling	<150 MPa	2305306
			ST (sharp-teeth)	ST-BITE 18	Loose	Soft; Medium (<400 g/t)	Limestone; Sandstone; Recycling	<150 MPa	2305309
			RT (regular-teeth)	RT-BITE 18	Loose	Medium (<600 g/t)	Universal; Recycling; Natural stone	<200 MPa	2419250
			RT (regular-teeth)	RT-BITE 20	Loose	Medium (>600 g/t)	Universal; Recycling; Natural stone	>200 MPa	2419251
			RT (regular-teeth)	RT-BITE 18	Fix	Medium (<600 g/t)	Universal; Recycling; Natural stone	<200 MPa	2419252
			RT (regular-teeth)	RT-BITE 20	Fix	Medium (>600 g/t)	Universal; Recycling; Natural stone	>200 MPa	2419253
			FT (flat-teeth)	FT-BITE 18	Loose	Hard (<1000 g/t); Medium (>800 g/t)	Natural stone	<200 MPa	2576471
			FT (flat-teeth)	FT-BITE 18	Fix	Hard (<1000 g/t); Medium (>800 g/t)	Natural stone	<200 MPa	2576472
			MT (Multi Typ)	MT-BITE 18	Loose	Hard (>1000 g/t)	Natural stone	>200 MPa	2628287
			FT (flat-teeth)	FT-BITE 24	Fix	Hard (>1000 g/t)	Natural stone	>250 MPa	2850433

CRUSHER JAWS									
Series code	Serial code	Series range	Shape	Version	Type	Application/abrasiveness [g/t]	Application Type	Application/compressive strength	Part no.
MC 110 Z EVO	K006	1 - 9999	FT (flat-teeth)	FT-BITE 24	Loose	Hard (>1000 g/t)	Natural stone	>250 MPa	2850432
			RT (regular-teeth)	RT-BITE 24	Fix	Hard (<1000 g/t); Medium (>800 g/t)	Universal; Recycling; Natural stone	>250 MPa	2795133
			RT (regular-teeth)	RT-BITE 24	Loose	Hard (<1000 g/t); Medium (>800 g/t)	Universal; Recycling; Natural stone	>250 MPa	2795114
MC 110 R	K003	1 - 9999	RT (regular-teeth)	RT-BITE 20	Loose	Medium (>600 g/t)	Universal; Recycling; Natural stone	>200 MPa	2412269
			RT (regular-teeth)	RT-BITE 18	Loose	Medium (<600 g/t)	Universal; Recycling; Natural stone	<200 MPa	2292019
			RT (regular-teeth)	RT-BITE 18	Fix	Medium (<600 g/t)	Universal; Recycling; Natural stone	<200 MPa	2292016
			RT (regular-teeth)	RT-BITE 20	Fix	Medium (>600 g/t)	Universal; Recycling; Natural stone	>200 MPa	2412228
MC 110 Zi EVO	K015	1 - 9999	MT (Multi Typ)	MT-BITE 18	Loose	Hard (>1000 g/t)	Natural stone	>200 MPa	2628287
			RT (regular-teeth)	RT-BITE 24	Loose	Hard (<1000 g/t); Medium (>800 g/t)	Universal; Recycling; Natural stone	>250 MPa	2795114
			FT (flat-teeth)	FT-BITE 24	Loose	Hard (>1000 g/t)	Natural stone	>250 MPa	2850432
			ST (sharp-teeth)	ST-BITE 18	Fix	Soft; Medium (<400 g/t)	Limestone; Sandstone; Recycling	<150 MPa	2305306
			FT (flat-teeth)	FT-BITE 24	Fix	Hard (>1000 g/t)	Natural stone	>250 MPa	2850433

Original KLEEMANN

CRUSHING TOOLS FOR JAW CRUSHERS

CRUSHER JAWS									
Series code	Serial code	Series range	Shape	Version	Type	Application/abrasiveness [g/t]	Application Type	Application/compressive strength	Part no.
MC 110 Zi EVO	K015	1 - 9999	RT (regular-teeth)	RT-BITE 24	Fix	Hard (<1000 g/t); Medium (>800 g/t)	Universal; Recycling; Natural stone	>250 MPa	2795133
			RT (regular-teeth)	RT-BITE 18	Loose	Medium (<600 g/t)	Universal; Recycling; Natural stone	<200 MPa	2419250
			RT (regular-teeth)	RT-BITE 20	Loose	Medium (>600 g/t)	Universal; Recycling; Natural stone	>200 MPa	2419251
			RT (regular-teeth)	RT-BITE 18	Fix	Medium (<600 g/t)	Universal; Recycling; Natural stone	<200 MPa	2419252
			RT (regular-teeth)	RT-BITE 20	Fix	Medium (>600 g/t)	Universal; Recycling; Natural stone	>200 MPa	2419253
			FT (flat-teeth)	FT-BITE 18	Loose	Hard (<1000 g/t); Medium (>800 g/t)	Natural stone	<200 MPa	2576471
			FT (flat-teeth)	FT-BITE 18	Fix	Hard (<1000 g/t); Medium (>800 g/t)	Natural stone	<200 MPa	2576472
			ST (sharp-teeth)	ST-BITE 18	Loose	Soft; Medium (<400 g/t)	Limestone; Sandstone; Recycling	<150 MPa	2305309
MC 120 Z	K007	1 - 9999	RT (regular-teeth)	RT-BITE 18	Fix	Medium (<600 g/t)	Universal; Recycling; Natural stone	<200 MPa	2292013
			RT (regular-teeth)	RT-BITE 18	Loose	Medium (<600 g/t)	Universal; Recycling; Natural stone	<200 MPa	2292007
			RT (regular-teeth)	RT-BITE 20	Fix	Medium (>600 g/t)	Universal; Recycling; Natural stone	>200 MPa	2412366
			RT (regular-teeth)	RT-BITE 20	Loose	Medium (>600 g/t)	Universal; Recycling; Natural stone	>200 MPa	2412356

CRUSHER JAWS

Series code	Serial code	Series range	Shape	Version	Type	Application/abrasiveness [g/t]	Application Type	Application/compressive strength	Part no.
MC 120 PRO	K034	25 - 9999	FT (flat-teeth)	FT-BITE 18	Loose	Hard (<1000 g/t); Medium (>800 g/t)	Natural stone	<200 MPa	2457878
			RT (regular-teeth)	RT-BITE 18	Loose	Medium (<600 g/t)	Universal; Recycling; Natural stone	<200 MPa	2457875
			FT (flat-teeth)	FT-BITE 20	Fix	Hard (<1000 g/t)	Natural stone	>200 MPa	2570194
			RT (regular-teeth)	RT-BITE 20	Fix	Medium (>600 g/t)	Universal; Recycling; Natural stone	>200 MPa	2570192
			FT (flat-teeth)	FT-BITE 20	Loose	Hard (<1000 g/t)	Natural stone	>200 MPa	2570191
			RT (regular-teeth)	RT-BITE 20	Loose	Medium (>600 g/t)	Universal; Recycling; Natural stone	>200 MPa	2570190
			FT (flat-teeth)	FT-BITE 18	Fix	Hard (<1000 g/t); Medium (>800 g/t)	Natural stone	<200 MPa	2457909
			RT (regular-teeth)	RT-BITE 18	Fix	Medium (<600 g/t)	Universal; Recycling; Natural stone	<200 MPa	2457892
	K035	3 - 9999	FT (flat-teeth)	FT-BITE 20	Fix	Hard (<1000 g/t)	Natural stone	>200 MPa	2570194
			FT (flat-teeth)	FT-BITE 18	Loose	Hard (<1000 g/t); Medium (>800 g/t)	Natural stone	<200 MPa	2457878
			RT (regular-teeth)	RT-BITE 18	Fix	Medium (<600 g/t)	Universal; Recycling; Natural stone	<200 MPa	2457892
			FT (flat-teeth)	FT-BITE 18	Fix	Hard (<1000 g/t); Medium (>800 g/t)	Natural stone	<200 MPa	2457909
			RT (regular-teeth)	RT-BITE 20	Loose	Medium (>600 g/t)	Universal; Recycling; Natural stone	>200 MPa	2570190

Original KLEEMANN

CRUSHING TOOLS FOR JAW CRUSHERS

CRUSHER JAWS									
Series code	Serial code	Series range	Shape	Version	Type	Application/abrasiveness [g/t]	Application Type	Application/compressive strength	Part no.
MC 120 PRO	K035	3 - 9999	FT (flat-teeth)	FT-BITE 20	Loose	Hard (<1000 g/t)	Natural stone	>200 MPa	2570191
			RT (regular-teeth)	RT-BITE 20	Fix	Medium (>600 g/t)	Universal; Recycling; Natural stone	>200 MPa	2570192
			RT (regular-teeth)	RT-BITE 18	Loose	Medium (<600 g/t)	Universal; Recycling; Natural stone	<200 MPa	2457875
MC 110 EVO	K116	1 - 9999	FT (flat-teeth)	FT-BITE 24	Fix	Hard (>1000 g/t)	Natural stone	>250 MPa	2850433
			RT (regular-teeth)	RT-BITE 24	Fix	Hard (<1000 g/t); Medium (>800 g/t)	Universal; Recycling; Natural stone	>250 MPa	2795133
			FT (flat-teeth)	FT-BITE 18	Fix	Hard (<1000 g/t); Medium (>800 g/t)	Natural stone	<200 MPa	2576472
			RT (regular-teeth)	RT-BITE 20	Fix	Medium (>600 g/t)	Universal; Recycling; Natural stone	>200 MPa	2419253
			RT (regular-teeth)	RT-BITE 18	Fix	Medium (<600 g/t)	Universal; Recycling; Natural stone	<200 MPa	2419252
			ST (sharp-teeth)	ST-BITE 18	Fix	Soft; Medium (<400 g/t)	Limestone; Sandstone; Recycling	<150 MPa	2305306
			FT (flat-teeth)	FT-BITE 24	Loose	Hard (>1000 g/t)	Natural stone	>250 MPa	2850432
			RT (regular-teeth)	RT-BITE 24	Loose	Hard (<1000 g/t); Medium (>800 g/t)	Universal; Recycling; Natural stone	>250 MPa	2795114
			MT (Multi Typ)	MT-BITE 18	Loose	Hard (>1000 g/t)	Natural stone	>200 MPa	2628287

CRUSHER JAWS

Series code	Serial code	Series range	Shape	Version	Type	Application/abrasiveness [g/t]	Application Type	Application/compressive strength	Part no.
MC 110 EVO	K116	1 - 9999	FT (flat-teeth)	FT-BITE 18	Loose	Hard (<1000 g/t); Medium (>800 g/t)	Natural stone	<200 MPa	2576471
			RT (regular-teeth)	RT-BITE 18	Loose	Medium (<600 g/t)	Universal; Recycling; Natural stone	<200 MPa	2419250
			ST (sharp-teeth)	ST-BITE 18	Loose	Soft; Medium (<400 g/t)	Limestone; Sandstone; Recycling	<150 MPa	2305309
			RT (regular-teeth)	RT-BITE 20	Loose	Medium (>600 g/t)	Universal; Recycling; Natural stone	>200 MPa	2419251
	K117	1 - 9999	RT (regular-teeth)	RT-BITE 24	Fix	Hard (<1000 g/t); Medium (>800 g/t)	Universal; Recycling; Natural stone	>250 MPa	2795133
			FT (flat-teeth)	FT-BITE 18	Fix	Hard (<1000 g/t); Medium (>800 g/t)	Natural stone	<200 MPa	2576472
			RT (regular-teeth)	RT-BITE 20	Fix	Medium (>600 g/t)	Universal; Recycling; Natural stone	>200 MPa	2419253
			RT (regular-teeth)	RT-BITE 18	Fix	Medium (<600 g/t)	Universal; Recycling; Natural stone	<200 MPa	2419252
			ST (sharp-teeth)	ST-BITE 18	Fix	Soft; Medium (<400 g/t)	Limestone; Sandstone; Recycling	<150 MPa	2305306
			FT (flat-teeth)	FT-BITE 24	Loose	Hard (>1000 g/t)	Natural stone	>250 MPa	2850432
			FT (flat-teeth)	FT-BITE 24	Fix	Hard (>1000 g/t)	Natural stone	>250 MPa	2850433
			MT (Multi Typ)	MT-BITE 18	Loose	Hard (>1000 g/t)	Natural stone	>200 MPa	2628287

Original KLEEMANN

CRUSHING TOOLS FOR JAW CRUSHERS

CRUSHER JAWS									
Series code	Serial code	Series range	Shape	Version	Type	Application/abrasiveness [g/t]	Application Type	Application/compressive strength	Part no.
MC 110 EVO	K117	1 - 9999	FT (flat-teeth)	FT-BITE 18	Loose	Hard (<1000 g/t); Medium (>800 g/t)	Natural stone	<200 MPa	2576471
			RT (regular-teeth)	RT-BITE 20	Loose	Medium (>600 g/t)	Universal; Recycling; Natural stone	>200 MPa	2419251
			RT (regular-teeth)	RT-BITE 18	Loose	Medium (<600 g/t)	Universal; Recycling; Natural stone	<200 MPa	2419250
			ST (sharp-teeth)	ST-BITE 18	Loose	Soft; Medium (<400 g/t)	Limestone; Sandstone; Recycling	<150 MPa	2305309
			RT (regular-teeth)	RT-BITE 24	Loose	Hard (<1000 g/t); Medium (>800 g/t)	Universal; Recycling; Natural stone	>250 MPa	2795114

CHEEK PLATES

Genuine KLEEMANN cheek plates are located to the right and left of the crushing jaws. They are made of highly wear-resistant steel to protect the crusher housing. The practical design of the cheek plates allows them to be mounted without bolts, thus saving valuable disassembly and assembly time.

CHEEK PLATES					
Series code	Serial code	Series range	Version	Position	Part no.
MC 100 R	K001	1 - 9999	KRS 50	left	2314602
			KRS 40	left	F10350993
			KRS 40	right	F10350983
			KRS 50	right	2314596
MC 100 EVO	K002	1 - 9999	KRS 40	left; right	2282528

CHEEK PLATES

Series code	Serial code	Series range	Version	Position	Part no.
MC 100 EVO	K002	1 - 9999	KRS HW	left; right	2462899
			KRS 50	left; right	2383215
	K011	1 - 9999	KRS 50	left; right	2383215
			KRS HW	left; right	2462899
			KRS 40	left; right	2282528
MC 110 R EVO	K005	1 - 9999	KRS 40	upper left	2242112
			KRS 40	upper right	2242111
			KRS 50	upper right	2355332
			KRS 50	upper left	2355333
			KRS 50	lower right	2355334
			KRS 50	lower left	2355337
			KRS HW	lower left	2462960
			KRS HW	upper left	2462971
			KRS HW	lower right	2463069
			KRS 40	lower right	2242115
			KRS 40	lower left	2242120
			KRS HW	upper right	2463084
MC 110 Ri EVO	K014	1 - 9999	KRS HW	upper right	2463084
			KRS HW	upper left	2462971
			KRS HW	lower right	2463069
			KRS HW	lower left	2462960
			KRS 50	lower left	2355337
			KRS 50	lower right	2355334
			KRS 50	upper left	2355333
			KRS 50	upper right	2355332
			KRS 40	lower left	2242120

Original KLEEMANN

CRUSHING TOOLS FOR JAW CRUSHERS

CHEEK PLATES					
Series code	Serial code	Series range	Version	Position	Part no.
MC 110 Ri EVO	K014	1 - 9999	KRS 40	upper right	2242111
			KRS 40	upper left	2242112
			KRS 40	lower right	2242115
MC 110 Z	K004	1 - 9999	KRS 40	upper right	F10377263
			KRS 40	upper left	F10377273
			KRS 40	lower right	F10377283
			KRS 40	lower left	F10377293
			KRS 50	upper right	2243817
			KRS 50	lower right	2243821
			KRS 50	upper left	2243829
			KRS 50	lower left	2243840
MC 110 Z EVO	K006	1 - 9999	KRS 40	upper right	2242111
			KRS 40	upper left	2242112
			KRS 40	lower right	2242115
			KRS 40	lower left	2242120
			KRS 50	upper right	2355332
			KRS 50	upper left	2355333
			KRS 50	lower right	2355334
			KRS 50	lower left	2355337
			KRS HW	lower left	2462960
			KRS HW	upper left	2462971
			KRS HW	lower right	2463069
			KRS HW	upper right	2463084
MC 110 R	K003	1 - 9999	KRS 40	upper right	F10377263
			KRS 40	upper left	F10377273
			KRS 40	lower right	F10377283

CHEEK PLATES

Series code	Serial code	Series range	Version	Position	Part no.
MC 110 R	K003	1 - 9999	KRS 50	lower left	2243840
			KRS 50	upper right	2243817
			KRS 50	lower right	2243821
			KRS 50	upper left	2243829
			KRS 40	lower left	F10377293
MC 110 Zi EVO	K015	1 - 9999	KRS 40	upper right	2242111
			KRS 40	upper left	2242112
			KRS 40	lower right	2242115
			KRS 40	lower left	2242120
			KRS 50	upper right	2355332
			KRS HW	upper right	2463084
			KRS 50	lower right	2355334
			KRS 50	lower left	2355337
			KRS HW	lower left	2462960
			KRS HW	upper left	2462971
			KRS HW	lower right	2463069
			KRS 50	upper left	2355333
MC 120 Z	K007	1 - 9999	KRS 40	upper right	F20002091
			KRS 40	lower right	F20002092
			KRS 40	upper left	F20002093
			KRS 50	lower right	2314590
			KRS 50	upper left	2314575
			KRS 50	upper right	2314582
			KRS 50	lower left	2314587
			KRS 40	lower left	F20002094
MC 120 PRO	K034	1 - 24	KRS 40	upper left	2483369

CRUSHING TOOLS FOR JAW CRUSHERS

CHEEK PLATES					
Series code	Serial code	Series range	Version	Position	Part no.
MC 120 PRO	K034	1 - 24	KRS 50	lower right	2629513
			KRS 50	lower left	2629512
			KRS 50	upper right	2629509
			KRS 50	upper left	2629507
			KRS 40	lower right	2483372
			KRS 40	lower left	2483371
			KRS 40	upper right	2483370
		25 - 9999	KRS 40	upper right	2641255
			KRS 50	lower right	2641274
			KRS 50	lower left	2641271
			KRS 50	upper right	2641270
			KRS 50	upper left	2641268
			KRS 40	upper left	2641256
			KRS 40	lower right	2641257
			KRS 40	lower left	2641259
	K035	1 - 2	KRS 40	upper left	2483369
			KRS 40	upper right	2483370
			KRS 50	lower right	2629513
			KRS 50	lower left	2629512
			KRS 50	upper right	2629509
			KRS 50	upper left	2629507
			KRS 40	lower right	2483372
			KRS 40	lower left	2483371
		3 - 9999	KRS 40	upper right	2641255
			KRS 50	lower left	2641271
			KRS 50	upper right	2641270

CHEEK PLATES

Series code	Serial code	Series range	Version	Position	Part no.
MC 120 PRO	K035	3 - 9999	KRS 50	upper left	2641268
			KRS 40	lower left	2641259
			KRS 40	lower right	2641257
			KRS 40	upper left	2641256
			KRS 50	lower right	2641274
MC 125 PRO	K008	1 - 9999	KRS 40	upper left; upper right	F10109101
			KRS 50	lower left; lower right	2369903
			KRS 50	upper left; upper right	2369899
			KRS 40	lower left; lower right	F10109111
MC 110 EVO	K116, K117	1 - 9999	KRS 40	lower right	2679463
			KRS 40	lower left	2679488
			KRS 40	upper right	2679359
			KRS 40	upper left	2679487
			KRS 50	lower right	2932937
			KRS HW	upper left	2968284
			KRS 50	upper right	2932929
			KRS 50	upper left	2932939
			KRS HW	lower right	2968282
			KRS HW	lower left	2968280
			KRS HW	upper right	2968274
			KRS 50	lower left	2932936

Original KLEEMANN

CRUSHING TOOLS FOR CONE CRUSHERS

The KX series of cone crushers are typically used as secondary and tertiary crushers. In this case, the material entering the crusher is crushed between the rigid crushing shell and the moving crushing cone.

To achieve consistently high performance and a long service life, the entire wear surface of the crushing tool must be used.

This can only be achieved if the crushing tools are selected to match the size of the material entering the crusher and the desired final product.

> Read more online

CRUSHING SHELLS AND CRUSHING CONES

The crushing tools must achieve an optimum crushing result and a long service life, even at a high degree of utilisation. This is why different crushing tool combinations, material thicknesses and manganese steel qualities are available from KLEEMANN for varying application conditions.

CRUSHING SHELLS AND CRUSHING CONES										
Series code	Serial code	Part	Crushing tool type	Application	Version	Manganese version Content	Tool type	Minimum gap width	Feed opening	Part no.
MCO 9 EVO	K072	crushing cone	Short Head	Fine; Medium; Coarse	SH-CONE 20	20.3 MnCr	KX200; KX250	10 mm - 25 mm	71 mm - 142 mm	2599925
			Standard	Fine; Medium; Coarse	S-CONE 20	20.3 MnCr	KX200; KX250	16 mm - 45 mm	116 mm - 199 mm	2450546
			Short Head	Fine; Medium; Coarse	SH-CONE 18	18.2 MnCr	KX200; KX250	10 mm - 25 mm	71 mm - 142 mm	2295676
			Standard	Fine; Medium; Coarse	S-CONE 18	18.2 MnCr	KX200; KX250	16 mm - 45 mm	116 mm - 199 mm	2295672
		crushing shell	Standard	Fine	S-CONE F 18	18.2 MnCr	KX200; KX250	16 mm - 32 mm	116 mm - 131 mm	2295652
			Short Head	Coarse	SH-CONE C 20	20.3 MnCr	KX200; KX250	13 mm - 25 mm	130 mm - 142 mm	2599957
			Short Head	Medium	SH-CONE M 20	20.3 MnCr	KX200; KX250	10 mm - 22 mm	99 mm - 111 mm	2599959
			Short Head	Fine	SH-CONE F 20	20.3 MnCr	KX200; KX250	10 mm - 19 mm	71 mm - 80 mm	2599960
			Short Head	Medium	SH-CONE M 18	18.2 MnCr	KX200; KX250	10 mm - 22 mm	99 mm - 111 mm	2369191
			Standard	Medium	S-CONE M 18	18.2 MnCr	KX200; KX250	19 mm - 38 mm	138 mm - 157 mm	2295649

Original KLEEMANN

CRUSHING TOOLS FOR CONE CRUSHERS

CRUSHING SHELLS AND CRUSHING CONES										
Series code	Serial code	Part	Crushing tool type	Application	Version	Manganese version Content	Tool type	Minimum gap width	Feed opening	Part no.
MCO 9 EVO	K072	crushing shell	Standard	Fine	S-CONE F 20	20.3 MnCr	KX200; KX250	16 mm - 32 mm	116 mm - 131 mm	2450551
			Standard	Medium	S-CONE M 20	20.3 MnCr	KX200; KX250	19 mm - 38 mm	138 mm - 157 mm	2450550
			Short Head	Fine	SH-CONE F 18	18.2 MnCr	KX200; KX250	10 mm - 19 mm	71 mm - 80 mm	2369178
		Crushing tools SET for cone crushers	Standard	Fine	S-CONE F 20	20.3 MnCr	KX200; KX250	16 mm - 32 mm	116 mm - 131 mm	2615651
			Short Head	Coarse	SH-CONE C 20	20.3 MnCr	KX200; KX250	13 mm - 25 mm	130 mm - 142 mm	2615652
			Short Head	Medium	SH-CONE M 20	20.3 MnCr	KX200; KX250	10 mm - 22 mm	99 mm - 111 mm	2615653
			Short Head	Fine	SH-CONE F 20	20.3 MnCr	KX200; KX250	10 mm - 19 mm	71 mm - 80 mm	2615654
			Standard	Coarse	S-CONE C 20	20.3 MnCr	KX200; KX250	25 mm - 45 mm	179 mm - 199 mm	2615695
			Standard	Medium	S-CONE M 20	20.3 MnCr	KX200; KX250	19 mm - 38 mm	138 mm - 157 mm	2615697
			Standard	Fine	S-CONE F 20	20.3 MnCr	KX200; KX250	16 mm - 32 mm	116 mm - 131 mm	2615699
			Short Head	Coarse	SH-CONE C 20	20.3 MnCr	KX200; KX250	13 mm - 25 mm	130 mm - 142 mm	2615700
			Short Head	Medium	SH-CONE M 20	20.3 MnCr	KX200; KX250	10 mm - 22 mm	99 mm - 111 mm	2615701
			Short Head	Fine	SH-CONE F 20	20.3 MnCr	KX200; KX250	10 mm - 19 mm	71 mm - 80 mm	2615704

CRUSHING SHELLS AND CRUSHING CONES

Series code	Serial code	Part	Crushing tool type	Application	Version	Manganese version Content	Tool type	Minimum gap width	Feed opening	Part no.
MCO 9 EVO	K072	Crushing tools SET for cone crushers	Standard	Medium	S-CONE M 20	20.3 MnCr	KX200; KX250	19 mm - 38 mm	138 mm - 157 mm	2615650
			Standard	Coarse	S-CONE C 20	20.3 MnCr	KX200; KX250	25 mm - 45 mm	179 mm - 199 mm	2615649
			Short Head	Fine	SH-CONE F 18	18.2 MnCr	KX200; KX250	10 mm - 19 mm	71 mm - 80 mm	2615629
			Short Head	Medium	SH-CONE M 18	18.2 MnCr	KX200; KX250	10 mm - 22 mm	99 mm - 111 mm	2615628
			Short Head	Coarse	SH-CONE C 18	18.2 MnCr	KX200; KX250	13 mm - 25 mm	130 mm - 142 mm	2615626
			Standard	Fine	S-CONE F 18	18.2 MnCr	KX200; KX250	16 mm - 32 mm	116 mm - 131 mm	2615625
			Standard	Medium	S-CONE M 18	18.2 MnCr	KX200; KX250	19 mm - 38 mm	138 mm - 157 mm	2615624
			Standard	Coarse	S-CONE C 18	18.2 MnCr	KX200; KX250	25 mm - 45 mm	179 mm - 199 mm	2615623
			Short Head	Fine	SH-CONE F 18	18.2 MnCr	KX200; KX250	10 mm - 19 mm	71 mm - 80 mm	2402524
			Short Head	Medium	SH-CONE M 18	18.2 MnCr	KX200; KX250	10 mm - 22 mm	99 mm - 111 mm	2402523
			Short Head	Coarse	SH-CONE C 18	18.2 MnCr	KX200; KX250	13 mm - 25 mm	130 mm - 142 mm	2402522
			Standard	Fine	S-CONE F 18	18.2 MnCr	KX200; KX250	16 mm - 32 mm	116 mm - 131 mm	2402521
			Standard	Coarse	S-CONE C 18	18.2 MnCr	KX200; KX250	25 mm - 45 mm	179 mm - 199 mm	2402518

Original KLEEMANN

CRUSHING TOOLS FOR CONE CRUSHERS

CRUSHING SHELLS AND CRUSHING CONES										
Series code	Serial code	Part	Crushing tool type	Application	Version	Manganese version Content	Tool type	Minimum gap width	Feed opening	Part no.
MCO 9 EVO	K072	Crushing tools SET for cone crushers	Standard	Medium	S-CONE M 18	18.2 MnCr	KX200; KX250	19 mm - 38 mm	138 mm - 157 mm	2402519
		crushing shell	Short Head	Coarse	SH-CONE C 18	18.2 MnCr	KX200; KX250	13 mm - 25 mm	130 mm - 142 mm	2369180
MCO 9i EVO	K073	crushing cone	Standard	Fine; Medium; Coarse	S-CONE 18	18.2 MnCr	KX200; KX250	16 mm - 45 mm	116 mm - 199 mm	2295672
			Short Head	Fine; Medium; Coarse	SH-CONE 18	18.2 MnCr	KX200; KX250	10 mm - 25 mm	71 mm - 142 mm	2295676
			Short Head	Fine; Medium; Coarse	SH-CONE 20	20.3 MnCr	KX200; KX250	10 mm - 25 mm	71 mm - 142 mm	2599925
			Standard	Fine; Medium; Coarse	S-CONE 20	20.3 MnCr	KX200; KX250	16 mm - 45 mm	116 mm - 199 mm	2450546
		crushing shell	Short Head	Coarse	SH-CONE C 20	20.3 MnCr	KX200; KX250	13 mm - 25 mm	130 mm - 142 mm	2599957
			Standard	Medium	S-CONE M 20	20.3 MnCr	KX200; KX250	19 mm - 38 mm	138 mm - 157 mm	2450550
			Standard	Fine	S-CONE F 20	20.3 MnCr	KX200; KX250	16 mm - 32 mm	116 mm - 131 mm	2450551
			Standard	Medium	S-CONE M 18	18.2 MnCr	KX200; KX250	19 mm - 38 mm	138 mm - 157 mm	2295649
			Standard	Fine	S-CONE F 18	18.2 MnCr	KX200; KX250	16 mm - 32 mm	116 mm - 131 mm	2295652
			Short Head	Coarse	SH-CONE C 18	18.2 MnCr	KX200; KX250	13 mm - 25 mm	130 mm - 142 mm	2369180
			Short Head	Medium	SH-CONE M 20	20.3 MnCr	KX200; KX250	10 mm - 22 mm	99 mm - 111 mm	2599959

CRUSHING SHELLS AND CRUSHING CONES

Series code	Serial code	Part	Crushing tool type	Application	Version	Manganese version Content	Tool type	Minimum gap width	Feed opening	Part no.
MCO 9i EVO	K073	crushing shell	Short Head	Fine	SH-CONE F 20	20.3 MnCr	KX200; KX250	10 mm - 19 mm	71 mm - 80 mm	2599960
			Short Head	Medium	SH-CONE M 18	18.2 MnCr	KX200; KX250	10 mm - 22 mm	99 mm - 111 mm	2369191
			Short Head	Fine	SH-CONE F 18	18.2 MnCr	KX200; KX250	10 mm - 19 mm	71 mm - 80 mm	2369178
		Crushing tools SET for cone crushers	Short Head	Medium	SH-CONE M 20	20.3 MnCr	KX200; KX250	10 mm - 22 mm	99 mm - 111 mm	2615701
			Short Head	Medium	SH-CONE M 18	18.2 MnCr	KX200; KX250	10 mm - 22 mm	99 mm - 111 mm	2402523
			Short Head	Fine	SH-CONE F 20	20.3 MnCr	KX200; KX250	10 mm - 19 mm	71 mm - 80 mm	2615704
			Standard	Medium	S-CONE M 18	18.2 MnCr	KX200; KX250	19 mm - 38 mm	138 mm - 157 mm	2402519
			Standard	Coarse	S-CONE C 18	18.2 MnCr	KX200; KX250	25 mm - 45 mm	179 mm - 199 mm	2402518
			Standard	Fine	S-CONE F 18	18.2 MnCr	KX200; KX250	16 mm - 32 mm	116 mm - 131 mm	2402521
			Standard	Medium	S-CONE M 20	20.3 MnCr	KX200; KX250	19 mm - 38 mm	138 mm - 157 mm	2615650
			Standard	Fine	S-CONE F 20	20.3 MnCr	KX200; KX250	16 mm - 32 mm	116 mm - 131 mm	2615651
			Short Head	Coarse	SH-CONE C 20	20.3 MnCr	KX200; KX250	13 mm - 25 mm	130 mm - 142 mm	2615652
			Short Head	Medium	SH-CONE M 20	20.3 MnCr	KX200; KX250	10 mm - 22 mm	99 mm - 111 mm	2615653

Original KLEEMANN

CRUSHING TOOLS FOR CONE CRUSHERS

CRUSHING SHELLS AND CRUSHING CONES										
Series code	Serial code	Part	Crushing tool type	Application	Version	Manganese version Content	Tool type	Minimum gap width	Feed opening	Part no.
MCO 9i EVO	K073	Crushing tools SET for cone crushers	Short Head	Fine	SH-CONE F 20	20.3 MnCr	KX200; KX250	10 mm - 19 mm	71 mm - 80 mm	2615654
			Standard	Coarse	S-CONE C 20	20.3 MnCr	KX200; KX250	25 mm - 45 mm	179 mm - 199 mm	2615695
			Standard	Medium	S-CONE M 20	20.3 MnCr	KX200; KX250	19 mm - 38 mm	138 mm - 157 mm	2615697
			Standard	Fine	S-CONE F 20	20.3 MnCr	KX200; KX250	16 mm - 32 mm	116 mm - 131 mm	2615699
			Short Head	Coarse	SH-CONE C 20	20.3 MnCr	KX200; KX250	13 mm - 25 mm	130 mm - 142 mm	2615700
			Standard	Coarse	S-CONE C 20	20.3 MnCr	KX200; KX250	25 mm - 45 mm	179 mm - 199 mm	2615649
			Short Head	Fine	SH-CONE F 18	18.2 MnCr	KX200; KX250	10 mm - 19 mm	71 mm - 80 mm	2615629
			Short Head	Medium	SH-CONE M 18	18.2 MnCr	KX200; KX250	10 mm - 22 mm	99 mm - 111 mm	2615628
			Short Head	Coarse	SH-CONE C 18	18.2 MnCr	KX200; KX250	13 mm - 25 mm	130 mm - 142 mm	2615626
			Standard	Fine	S-CONE F 18	18.2 MnCr	KX200; KX250	16 mm - 32 mm	116 mm - 131 mm	2615625
			Standard	Medium	S-CONE M 18	18.2 MnCr	KX200; KX250	19 mm - 38 mm	138 mm - 157 mm	2615624
			Standard	Coarse	S-CONE C 18	18.2 MnCr	KX200; KX250	25 mm - 45 mm	179 mm - 199 mm	2615623
			Short Head	Fine	SH-CONE F 18	18.2 MnCr	KX200; KX250	10 mm - 19 mm	71 mm - 80 mm	2402524

CRUSHING SHELLS AND CRUSHING CONES

Series code	Serial code	Part	Crushing tool type	Application	Version	Manganese version Content	Tool type	Minimum gap width	Feed opening	Part no.
MCO 9i EVO	K073	Crushing tools SET for cone crushers	Short Head	Coarse	SH-CONE C 18	18.2 MnCr	KX200; KX250	13 mm - 25 mm	130 mm - 142 mm	2402522
MCO 9S EVO	K074	crushing cone	Standard	Fine; Medium; Coarse	S-CONE 20	20.3 MnCr	KX200; KX250	16 mm - 45 mm	116 mm - 199 mm	2450546
			Short Head	Fine; Medium; Coarse	SH-CONE 20	20.3 MnCr	KX200; KX250	10 mm - 25 mm	71 mm - 142 mm	2599925
			Short Head	Fine; Medium; Coarse	SH-CONE 18	18.2 MnCr	KX200; KX250	10 mm - 25 mm	71 mm - 142 mm	2295676
			Standard	Fine; Medium; Coarse	S-CONE 18	18.2 MnCr	KX200; KX250	16 mm - 45 mm	116 mm - 199 mm	2295672
		crushing shell	Short Head	Medium	SH-CONE M 18	18.2 MnCr	KX200; KX250	10 mm - 22 mm	99 mm - 111 mm	2369191
			Standard	Fine	S-CONE F 18	18.2 MnCr	KX200; KX250	16 mm - 32 mm	116 mm - 131 mm	2295652
			Short Head	Fine	SH-CONE F 18	18.2 MnCr	KX200; KX250	10 mm - 19 mm	71 mm - 80 mm	2369178
			Standard	Medium	S-CONE M 20	20.3 MnCr	KX200; KX250	19 mm - 38 mm	138 mm - 157 mm	2450550
			Standard	Fine	S-CONE F 20	20.3 MnCr	KX200; KX250	16 mm - 32 mm	116 mm - 131 mm	2450551
			Standard	Medium	S-CONE M 18	18.2 MnCr	KX200; KX250	19 mm - 38 mm	138 mm - 157 mm	2295649
			Short Head	Coarse	SH-CONE C 20	20.3 MnCr	KX200; KX250	13 mm - 25 mm	130 mm - 142 mm	2599957
			Short Head	Medium	SH-CONE M 20	20.3 MnCr	KX200; KX250	10 mm - 22 mm	99 mm - 111 mm	2599959

Original KLEEMANN

CRUSHING TOOLS FOR CONE CRUSHERS

CRUSHING SHELLS AND CRUSHING CONES										
Series code	Serial code	Part	Crushing tool type	Application	Version	Manganese version Content	Tool type	Minimum gap width	Feed opening	Part no.
MCO 9S EVO	K074	crushing shell	Short Head	Fine	SH-CONE F 20	20.3 MnCr	KX200; KX250	10 mm - 19 mm	71 mm - 80 mm	2599960
			Short Head	Coarse	SH-CONE C 18	18.2 MnCr	KX200; KX250	13 mm - 25 mm	130 mm - 142 mm	2369180
		Crushing tools SET for cone crushers	Short Head	Fine	SH-CONE F 18	18.2 MnCr	KX200; KX250	10 mm - 19 mm	71 mm - 80 mm	2615629
			Short Head	Coarse	SH-CONE C 18	18.2 MnCr	KX200; KX250	13 mm - 25 mm	130 mm - 142 mm	2402522
			Standard	Medium	S-CONE M 20	20.3 MnCr	KX200; KX250	19 mm - 38 mm	138 mm - 157 mm	2615650
			Standard	Fine	S-CONE F 20	20.3 MnCr	KX200; KX250	16 mm - 32 mm	116 mm - 131 mm	2615651
			Short Head	Coarse	SH-CONE C 20	20.3 MnCr	KX200; KX250	13 mm - 25 mm	130 mm - 142 mm	2615652
			Short Head	Medium	SH-CONE M 20	20.3 MnCr	KX200; KX250	10 mm - 22 mm	99 mm - 111 mm	2615653
			Short Head	Fine	SH-CONE F 20	20.3 MnCr	KX200; KX250	10 mm - 19 mm	71 mm - 80 mm	2615654
			Standard	Coarse	S-CONE C 20	20.3 MnCr	KX200; KX250	25 mm - 45 mm	179 mm - 199 mm	2615695
			Standard	Medium	S-CONE M 20	20.3 MnCr	KX200; KX250	19 mm - 38 mm	138 mm - 157 mm	2615697
			Standard	Fine	S-CONE F 20	20.3 MnCr	KX200; KX250	16 mm - 32 mm	116 mm - 131 mm	2615699
			Short Head	Coarse	SH-CONE C 20	20.3 MnCr	KX200; KX250	13 mm - 25 mm	130 mm - 142 mm	2615700

CRUSHING SHELLS AND CRUSHING CONES

Series code	Serial code	Part	Crushing tool type	Application	Version	Manganese version Content	Tool type	Minimum gap width	Feed opening	Part no.
MCO 9S EVO	K074	Crushing tools SET for cone crushers	Short Head	Medium	SH-CONE M 20	20.3 MnCr	KX200; KX250	10 mm - 22 mm	99 mm - 111 mm	2615701
			Short Head	Fine	SH-CONE F 20	20.3 MnCr	KX200; KX250	10 mm - 19 mm	71 mm - 80 mm	2615704
			Standard	Medium	S-CONE M 18	18.2 MnCr	KX200; KX250	19 mm - 38 mm	138 mm - 157 mm	2402519
			Standard	Fine	S-CONE F 18	18.2 MnCr	KX200; KX250	16 mm - 32 mm	116 mm - 131 mm	2402521
			Standard	Coarse	S-CONE C 18	18.2 MnCr	KX200; KX250	25 mm - 45 mm	179 mm - 199 mm	2402518
			Short Head	Medium	SH-CONE M 18	18.2 MnCr	KX200; KX250	10 mm - 22 mm	99 mm - 111 mm	2615628
			Short Head	Coarse	SH-CONE C 18	18.2 MnCr	KX200; KX250	13 mm - 25 mm	130 mm - 142 mm	2615626
			Standard	Fine	S-CONE F 18	18.2 MnCr	KX200; KX250	16 mm - 32 mm	116 mm - 131 mm	2615625
			Standard	Medium	S-CONE M 18	18.2 MnCr	KX200; KX250	19 mm - 38 mm	138 mm - 157 mm	2615624
			Standard	Coarse	S-CONE C 18	18.2 MnCr	KX200; KX250	25 mm - 45 mm	179 mm - 199 mm	2615623
			Short Head	Fine	SH-CONE F 18	18.2 MnCr	KX200; KX250	10 mm - 19 mm	71 mm - 80 mm	2402524
			Short Head	Medium	SH-CONE M 18	18.2 MnCr	KX200; KX250	10 mm - 22 mm	99 mm - 111 mm	2402523
			Standard	Coarse	S-CONE C 20	20.3 MnCr	KX200; KX250	25 mm - 45 mm	179 mm - 199 mm	2615649

Original KLEEMANN

CRUSHING TOOLS FOR CONE CRUSHERS

CRUSHING SHELLS AND CRUSHING CONES										
Series code	Serial code	Part	Crushing tool type	Application	Version	Manganese version Content	Tool type	Minimum gap width	Feed opening	Part no.
MCO 9Si EVO	K075	crushing cone	Short Head	Fine; Medium; Coarse	SH-CONE 20	20.3 MnCr	KX200; KX250	10 mm - 25 mm	71 mm - 142 mm	2599925
			Short Head	Fine; Medium; Coarse	SH-CONE 18	18.2 MnCr	KX200; KX250	10 mm - 25 mm	71 mm - 142 mm	2295676
			Standard	Fine; Medium; Coarse	S-CONE 20	20.3 MnCr	KX200; KX250	16 mm - 45 mm	116 mm - 199 mm	2450546
			Standard	Fine; Medium; Coarse	S-CONE 18	18.2 MnCr	KX200; KX250	16 mm - 45 mm	116 mm - 199 mm	2295672
		crushing shell	Standard	Fine	S-CONE F 18	18.2 MnCr	KX200; KX250	16 mm - 32 mm	116 mm - 131 mm	2295652
			Short Head	Coarse	SH-CONE C 20	20.3 MnCr	KX200; KX250	13 mm - 25 mm	130 mm - 142 mm	2599957
			Standard	Medium	S-CONE M 18	18.2 MnCr	KX200; KX250	19 mm - 38 mm	138 mm - 157 mm	2295649
			Standard	Fine	S-CONE F 20	20.3 MnCr	KX200; KX250	16 mm - 32 mm	116 mm - 131 mm	2450551
			Standard	Medium	S-CONE M 20	20.3 MnCr	KX200; KX250	19 mm - 38 mm	138 mm - 157 mm	2450550
			Short Head	Fine	SH-CONE F 20	20.3 MnCr	KX200; KX250	10 mm - 19 mm	71 mm - 80 mm	2599960
			Short Head	Coarse	SH-CONE C 18	18.2 MnCr	KX200; KX250	13 mm - 25 mm	130 mm - 142 mm	2369180
			Short Head	Medium	SH-CONE M 18	18.2 MnCr	KX200; KX250	10 mm - 22 mm	99 mm - 111 mm	2369191
			Short Head	Fine	SH-CONE F 18	18.2 MnCr	KX200; KX250	10 mm - 19 mm	71 mm - 80 mm	2369178

CRUSHING SHELLS AND CRUSHING CONES

Series code	Serial code	Part	Crushing tool type	Application	Version	Manganese version Content	Tool type	Minimum gap width	Feed opening	Part no.
MCO 9Si EVO	K075	crushing shell	Short Head	Medium	SH-CONE M 20	20.3 MnCr	KX200; KX250	10 mm - 22 mm	99 mm - 111 mm	2599959
		Crushing tools SET for cone crushers	Standard	Fine	S-CONE F 18	18.2 MnCr	KX200; KX250	16 mm - 32 mm	116 mm - 131 mm	2402521
			Short Head	Coarse	SH-CONE C 18	18.2 MnCr	KX200; KX250	13 mm - 25 mm	130 mm - 142 mm	2402522
			Short Head	Medium	SH-CONE M 18	18.2 MnCr	KX200; KX250	10 mm - 22 mm	99 mm - 111 mm	2402523
			Short Head	Fine	SH-CONE F 18	18.2 MnCr	KX200; KX250	10 mm - 19 mm	71 mm - 80 mm	2402524
			Standard	Coarse	S-CONE C 18	18.2 MnCr	KX200; KX250	25 mm - 45 mm	179 mm - 199 mm	2615623
			Standard	Medium	S-CONE M 18	18.2 MnCr	KX200; KX250	19 mm - 38 mm	138 mm - 157 mm	2615624
			Standard	Fine	S-CONE F 18	18.2 MnCr	KX200; KX250	16 mm - 32 mm	116 mm - 131 mm	2615625
			Short Head	Coarse	SH-CONE C 18	18.2 MnCr	KX200; KX250	13 mm - 25 mm	130 mm - 142 mm	2615626
			Short Head	Medium	SH-CONE M 18	18.2 MnCr	KX200; KX250	10 mm - 22 mm	99 mm - 111 mm	2615628
			Short Head	Fine	SH-CONE F 18	18.2 MnCr	KX200; KX250	10 mm - 19 mm	71 mm - 80 mm	2615629
			Standard	Coarse	S-CONE C 20	20.3 MnCr	KX200; KX250	25 mm - 45 mm	179 mm - 199 mm	2615649
			Standard	Medium	S-CONE M 20	20.3 MnCr	KX200; KX250	19 mm - 38 mm	138 mm - 157 mm	2615650

Original KLEEMANN

CRUSHING TOOLS FOR CONE CRUSHERS

CRUSHING SHELLS AND CRUSHING CONES										
Series code	Serial code	Part	Crushing tool type	Application	Version	Manganese version Content	Tool type	Minimum gap width	Feed opening	Part no.
MCO 9Si EVO	K075	Crushing tools SET for cone crushers	Standard	Fine	S-CONE F 20	20.3 MnCr	KX200; KX250	16 mm - 32 mm	116 mm - 131 mm	2615651
			Short Head	Coarse	SH-CONE C 20	20.3 MnCr	KX200; KX250	13 mm - 25 mm	130 mm - 142 mm	2615652
			Short Head	Medium	SH-CONE M 20	20.3 MnCr	KX200; KX250	10 mm - 22 mm	99 mm - 111 mm	2615653
			Short Head	Fine	SH-CONE F 20	20.3 MnCr	KX200; KX250	10 mm - 19 mm	71 mm - 80 mm	2615654
			Standard	Coarse	S-CONE C 20	20.3 MnCr	KX200; KX250	25 mm - 45 mm	179 mm - 199 mm	2615695
			Standard	Medium	S-CONE M 20	20.3 MnCr	KX200; KX250	19 mm - 38 mm	138 mm - 157 mm	2615697
			Standard	Fine	S-CONE F 20	20.3 MnCr	KX200; KX250	16 mm - 32 mm	116 mm - 131 mm	2615699
			Short Head	Coarse	SH-CONE C 20	20.3 MnCr	KX200; KX250	13 mm - 25 mm	130 mm - 142 mm	2615700
			Short Head	Medium	SH-CONE M 20	20.3 MnCr	KX200; KX250	10 mm - 22 mm	99 mm - 111 mm	2615701
			Short Head	Fine	SH-CONE F 20	20.3 MnCr	KX200; KX250	10 mm - 19 mm	71 mm - 80 mm	2615704
			Standard	Coarse	S-CONE C 18	18.2 MnCr	KX200; KX250	25 mm - 45 mm	179 mm - 199 mm	2402518
			Standard	Medium	S-CONE M 18	18.2 MnCr	KX200; KX250	19 mm - 38 mm	138 mm - 157 mm	2402519
MCO 110	K038	crushing shell	Short Head	Coarse	SH-CONE C 18	18.2 MnCr	KX300	13 mm - 25 mm	102 mm - 114 mm	2272897

CRUSHING SHELLS AND CRUSHING CONES

Series code	Serial code	Part	Crushing tool type	Application	Version	Manganese version Content	Tool type	Minimum gap width	Feed opening	Part no.
MCO 110	K038	Crushing tools SET for cone crushers	Standard	Coarse	S-CONE C 18	18.2 MnCr	KX300	25 mm - 45 mm	220 mm - 240 mm	2402532
			Standard	Medium	S-CONE M 18	18.2 MnCr	KX300	19 mm - 38 mm	173 mm - 190 mm	2402534
			Short Head	Fine	SH-CONE F 18	18.2 MnCr	KX300	10 mm - 19 mm	52 mm - 62 mm	2402538
			Short Head	Medium	SH-CONE M 18	18.2 MnCr	KX300	10 mm - 22 mm	81 mm - 93 mm	2402537
			Short Head	Coarse	SH-CONE C 18	18.2 MnCr	KX300	13 mm - 25 mm	102 mm - 114 mm	2402536
			Standard	Fine	S-CONE F 18	18.2 MnCr	KX300	16 mm - 32 mm	131 mm - 147 mm	2402535
MCO 11 SX	K041	crushing shell	Short Head	Coarse	SH-CONE C 18	18.2 MnCr	KX300	13 mm - 25 mm	102 mm - 114 mm	2272897
		Crushing tools SET for cone crushers	Standard	Coarse	S-CONE C 18	18.2 MnCr	KX300	25 mm - 45 mm	220 mm - 240 mm	2402532
			Standard	Medium	S-CONE M 18	18.2 MnCr	KX300	19 mm - 38 mm	173 mm - 190 mm	2402534
			Short Head	Fine	SH-CONE F 18	18.2 MnCr	KX300	10 mm - 19 mm	52 mm - 62 mm	2402538
			Short Head	Medium	SH-CONE M 18	18.2 MnCr	KX300	10 mm - 22 mm	81 mm - 93 mm	2402537
			Short Head	Coarse	SH-CONE C 18	18.2 MnCr	KX300	13 mm - 25 mm	102 mm - 114 mm	2402536
			Standard	Fine	S-CONE F 18	18.2 MnCr	KX300	16 mm - 32 mm	131 mm - 147 mm	2402535

Original KLEEMANN

CRUSHING TOOLS FOR CONE CRUSHERS

CRUSHING SHELLS AND CRUSHING CONES										
Series code	Serial code	Part	Crushing tool type	Application	Version	Manganese version Content	Tool type	Minimum gap width	Feed opening	Part no.
MCO 110 PRO	K110	crushing cone	Short Head	Fine; Medium; Coarse	SH-CONE 20	20.3 MnCr	KX350	10 mm - 25 mm	52 mm - 114 mm	2566560
			Short Head	Fine; Medium; Coarse	SH-CONE 18	18.2 MnCr	KX350	10 mm - 25 mm	52 mm - 114 mm	2462298
			Standard	Fine; Medium; Coarse	S-CONE 20	20.3 MnCr	KX350	16 mm - 45 mm	131 mm - 240 mm	2566558
			Standard	Fine; Medium; Coarse	S-CONE 18	18.2 MnCr	KX350	16 mm - 45 mm	131 mm - 240 mm	2461750
		crushing shell	Standard	Fine	S-CONE F 18	18.2 MnCr	KX350	16 mm - 32 mm	131 mm - 147 mm	2487691
			Short Head	Medium	SH-CONE M 20	20.3 MnCr	KX350	10 mm - 22 mm	81 mm - 93 mm	2566555
			Short Head	Fine	SH-CONE F 20	20.3 MnCr	KX350	10 mm - 19 mm	52 mm - 62 mm	2566556
			Short Head	Coarse	SH-CONE C 18	18.2 MnCr	KX350	13 mm - 25 mm	102 mm - 114 mm	2462422
			Short Head	Medium	SH-CONE M 18	18.2 MnCr	KX350	10 mm - 22 mm	81 mm - 93 mm	2487664
			Short Head	Fine	SH-CONE F 18	18.2 MnCr	KX350	10 mm - 19 mm	52 mm - 62 mm	2487609
			Standard	Coarse	S-CONE C 20	20.3 MnCr	KX350	25 mm - 45 mm	220 mm - 240 mm	2566446
			Standard	Medium	S-CONE M 20	20.3 MnCr	KX350	19 mm - 38 mm	173 mm - 190 mm	2566480
			Standard	Fine	S-CONE F 20	20.3 MnCr	KX350	16 mm - 32 mm	131 mm - 147 mm	2566553

CRUSHING SHELLS AND CRUSHING CONES

Series code	Serial code	Part	Crushing tool type	Application	Version	Manganese version Content	Tool type	Minimum gap width	Feed opening	Part no.
MCO 110 PRO	K110	crushing shell	Standard	Coarse	S-CONE C 18	18.2 MnCr	KX350	25 mm - 45 mm	220 mm - 240 mm	2461748
			Standard	Medium	S-CONE M 18	18.2 MnCr	KX350	19 mm - 38 mm	173 mm - 190 mm	2462360
			Short Head	Coarse	SH-CONE C 20	20.3 MnCr	KX350	13 mm - 25 mm	102 mm - 114 mm	2566554
		Crushing tools SET for cone crushers	Standard	Medium	S-CONE M 18	18.2 MnCr	KX350	19 mm - 38 mm	173 mm - 190 mm	2531635
			Standard	Coarse	S-CONE C 18	18.2 MnCr	KX350	25 mm - 45 mm	220 mm - 240 mm	2531630
			Standard	Fine	S-CONE F 18	18.2 MnCr	KX350	16 mm - 32 mm	131 mm - 147 mm	2531636
			Short Head	Coarse	SH-CONE C 18	18.2 MnCr	KX350	13 mm - 25 mm	102 mm - 114 mm	2531637
			Standard	Coarse	S-CONE C 20	20.3 MnCr	KX350	25 mm - 45 mm	220 mm - 240 mm	2572391
			Short Head	Medium	SH-CONE M 18	18.2 MnCr	KX350	10 mm - 22 mm	81 mm - 93 mm	2531639
			Standard	Fine	S-CONE F 20	20.3 MnCr	KX350	16 mm - 32 mm	131 mm - 147 mm	2572389
			Short Head	Coarse	SH-CONE C 20	20.3 MnCr	KX350	13 mm - 25 mm	102 mm - 114 mm	2572388
			Short Head	Medium	SH-CONE M 20	20.3 MnCr	KX350	10 mm - 22 mm	81 mm - 93 mm	2572386
			Short Head	Fine	SH-CONE F 20	20.3 MnCr	KX350	10 mm - 19 mm	52 mm - 62 mm	2572385

Original KLEEMANN

CRUSHING TOOLS FOR CONE CRUSHERS

CRUSHING SHELLS AND CRUSHING CONES										
Series code	Serial code	Part	Crushing tool type	Application	Version	Manganese version Content	Tool type	Minimum gap width	Feed opening	Part no.
MCO 110 PRO	K110	Crushing tools SET for cone crushers	Short Head	Fine	SH-CONE F 18	18.2 MnCr	KX350	10 mm - 19 mm	52 mm - 62 mm	2531640
			Standard	Medium	S-CONE M 20	20.3 MnCr	KX350	19 mm - 38 mm	173 mm - 190 mm	2572390
	K111	crushing cone	Standard	Fine; Medium; Coarse	S-CONE 20	20.3 MnCr	KX350	16 mm - 45 mm	131 mm - 240 mm	2566558
			Short Head	Fine; Medium; Coarse	SH-CONE 18	18.2 MnCr	KX350	10 mm - 25 mm	52 mm - 114 mm	2462298
			Standard	Fine; Medium; Coarse	S-CONE 18	18.2 MnCr	KX350	16 mm - 45 mm	131 mm - 240 mm	2461750
			Short Head	Fine; Medium; Coarse	SH-CONE 20	20.3 MnCr	KX350	10 mm - 25 mm	52 mm - 114 mm	2566560
		crushing shell	Standard	Medium	S-CONE M 18	18.2 MnCr	KX350	19 mm - 38 mm	173 mm - 190 mm	2462360
			Short Head	Coarse	SH-CONE C 20	20.3 MnCr	KX350	13 mm - 25 mm	102 mm - 114 mm	2566554
			Short Head	Medium	SH-CONE M 20	20.3 MnCr	KX350	10 mm - 22 mm	81 mm - 93 mm	2566555
			Short Head	Fine	SH-CONE F 20	20.3 MnCr	KX350	10 mm - 19 mm	52 mm - 62 mm	2566556
			Standard	Coarse	S-CONE C 20	20.3 MnCr	KX350	25 mm - 45 mm	220 mm - 240 mm	2566446
			Standard	Medium	S-CONE M 20	20.3 MnCr	KX350	19 mm - 38 mm	173 mm - 190 mm	2566480
			Standard	Fine	S-CONE F 20	20.3 MnCr	KX350	16 mm - 32 mm	131 mm - 147 mm	2566553

CRUSHING SHELLS AND CRUSHING CONES

Series code	Serial code	Part	Crushing tool type	Application	Version	Manganese version Content	Tool type	Minimum gap width	Feed opening	Part no.
MCO 110 PRO	K111	crushing shell	Short Head	Coarse	SH-CONE C 18	18.2 MnCr	KX350	13 mm - 25 mm	102 mm - 114 mm	2462422
			Short Head	Medium	SH-CONE M 18	18.2 MnCr	KX350	10 mm - 22 mm	81 mm - 93 mm	2487664
			Short Head	Fine	SH-CONE F 18	18.2 MnCr	KX350	10 mm - 19 mm	52 mm - 62 mm	2487609
			Standard	Coarse	S-CONE C 18	18.2 MnCr	KX350	25 mm - 45 mm	220 mm - 240 mm	2461748
			Standard	Fine	S-CONE F 18	18.2 MnCr	KX350	16 mm - 32 mm	131 mm - 147 mm	2487691
		Crushing tools SET for cone crushers	Standard	Coarse	S-CONE C 18	18.2 MnCr	KX350	25 mm - 45 mm	220 mm - 240 mm	2531630
			Standard	Coarse	S-CONE C 20	20.3 MnCr	KX350	25 mm - 45 mm	220 mm - 240 mm	2572391
			Standard	Medium	S-CONE M 18	18.2 MnCr	KX350	19 mm - 38 mm	173 mm - 190 mm	2531635
			Standard	Medium	S-CONE M 20	20.3 MnCr	KX350	19 mm - 38 mm	173 mm - 190 mm	2572390
			Standard	Fine	S-CONE F 20	20.3 MnCr	KX350	16 mm - 32 mm	131 mm - 147 mm	2572389
			Standard	Fine	S-CONE F 18	18.2 MnCr	KX350	16 mm - 32 mm	131 mm - 147 mm	2531636
			Short Head	Medium	SH-CONE M 20	20.3 MnCr	KX350	10 mm - 22 mm	81 mm - 93 mm	2572386
			Short Head	Fine	SH-CONE F 20	20.3 MnCr	KX350	10 mm - 19 mm	52 mm - 62 mm	2572385

Original KLEEMANN

CRUSHING TOOLS FOR CONE CRUSHERS

CRUSHING SHELLS AND CRUSHING CONES										
Series code	Serial code	Part	Crushing tool type	Application	Version	Manganese version Content	Tool type	Minimum gap width	Feed opening	Part no.
MCO 110 PRO	K111	Crushing tools SET for cone crushers	Short Head	Fine	SH-CONE F 18	18.2 MnCr	KX350	10 mm - 19 mm	52 mm - 62 mm	2531640
			Short Head	Medium	SH-CONE M 18	18.2 MnCr	KX350	10 mm - 22 mm	81 mm - 93 mm	2531639
			Short Head	Coarse	SH-CONE C 18	18.2 MnCr	KX350	13 mm - 25 mm	102 mm - 114 mm	2531637
			Short Head	Coarse	SH-CONE C 20	20.3 MnCr	KX350	13 mm - 25 mm	102 mm - 114 mm	2572388
MCO 110 S PRO	K064	crushing shell	Short Head	Coarse	SH-CONE C 18	18.2 MnCr	KX300	13 mm - 25 mm	102 mm - 114 mm	2272897
		Crushing tools SET for cone crushers	Standard	Coarse	S-CONE C 18	18.2 MnCr	KX300	25 mm - 45 mm	220 mm - 240 mm	2402532
			Standard	Medium	S-CONE M 18	18.2 MnCr	KX300	19 mm - 38 mm	173 mm - 190 mm	2402534
			Short Head	Fine	SH-CONE F 18	18.2 MnCr	KX300	10 mm - 19 mm	52 mm - 62 mm	2402538
			Short Head	Medium	SH-CONE M 18	18.2 MnCr	KX300	10 mm - 22 mm	81 mm - 93 mm	2402537
			Short Head	Coarse	SH-CONE C 18	18.2 MnCr	KX300	13 mm - 25 mm	102 mm - 114 mm	2402536
			Standard	Fine	S-CONE F 18	18.2 MnCr	KX300	16 mm - 32 mm	131 mm - 147 mm	2402535
MCO 130 PRO	K042	crushing cone	Short Head	Fine; Medium; Coarse	SH-CONE 20	20.3 MnCr	KX400	10 mm - 25 mm	62 mm - 132 mm	2359122
			Short Head	Fine; Medium; Coarse	SH-CONE 18	18.2 MnCr	KX400	10 mm - 25 mm	62 mm - 132 mm	2268993

CRUSHING SHELLS AND CRUSHING CONES

Series code	Serial code	Part	Crushing tool type	Application	Version	Manganese version Content	Tool type	Minimum gap width	Feed opening	Part no.
MCO 130 PRO	K042	crushing cone	Standard	Fine; Medium; Coarse	S-CONE 20	20.3 MnCr	KX400	16 mm - 32 mm	152 mm - 329 mm	2359123
			Standard	Fine; Medium; Coarse	S-CONE 18	18.2 MnCr	KX400	16 mm - 32 mm	152 mm - 329 mm	2269083
		crushing shell	Short Head	Medium	SH-CONE M 20	20.3 MnCr	KX350	10 mm - 22 mm	81 mm - 93 mm	2566555
			Short Head	Coarse	SH-CONE C 18	18.2 MnCr	KX400	13 mm - 25 mm	119 mm - 132 mm	2268971
			Short Head	Medium	SH-CONE M 18	18.2 MnCr	KX400	10 mm - 22 mm	74 mm - 87 mm	2268968
			Short Head	Fine	SH-CONE F 18	18.2 MnCr	KX400	10 mm - 19 mm	62 mm - 73 mm	2268967
			Standard	Coarse	S-CONE C 20	20.3 MnCr	KX400	25 mm - 45 mm	320 mm - 329 mm	2359124
			Standard	Medium	S-CONE M 20	20.3 MnCr	KX400	22 mm - 45 mm	228 mm - 251 mm	2359126
			Standard	Fine	S-CONE F 20	20.3 MnCr	KX400	16 mm - 32 mm	152 mm - 169 mm	2359127
			Standard	Coarse	S-CONE C 18	18.2 MnCr	KX400	25 mm - 45 mm	320 mm - 329 mm	2268981
			Standard	Medium	S-CONE M 18	18.2 MnCr	KX400	22 mm - 45 mm	228 mm - 251 mm	2268979
			Standard	Fine	S-CONE F 18	18.2 MnCr	KX400	16 mm - 32 mm	152 mm - 169 mm	2268977
			Short Head	Fine	SH-CONE F 20	20.3 MnCr	KX400	10 mm - 19 mm	62 mm - 73 mm	2359130

Original KLEEMANN

CRUSHING TOOLS FOR CONE CRUSHERS

CRUSHING SHELLS AND CRUSHING CONES										
Series code	Serial code	Part	Crushing tool type	Application	Version	Manganese version Content	Tool type	Minimum gap width	Feed opening	Part no.
MCO 130 PRO	K042	crushing shell	Short Head	Coarse	SH-CONE C 20	20.3 MnCr	KX350	13 mm - 25 mm	102 mm - 114 mm	2566554
		Crushing tools SET for cone crushers	Standard	Fine	S-CONE F 18	18.2 MnCr	KX400	16 mm - 32 mm	152 mm - 169 mm	2402579
			Short Head	Coarse	SH-CONE C 18	18.2 MnCr	KX400	13 mm - 25 mm	119 mm - 132 mm	2402580
			Standard	Medium	S-CONE M 18	18.2 MnCr	KX400	22 mm - 45 mm	228 mm - 251 mm	2402577
			Standard	Coarse	S-CONE C 18	18.2 MnCr	KX400	25 mm - 45 mm	320 mm - 329 mm	2402576
			Short Head	Fine	SH-CONE F 20	20.3 MnCr	KX350	10 mm - 19 mm	52 mm - 62 mm	2572385
			Short Head	Medium	SH-CONE M 18	18.2 MnCr	KX400	10 mm - 22 mm	74 mm - 87 mm	2402581
			Short Head	Coarse	SH-CONE C 20	20.3 MnCr	KX350	13 mm - 25 mm	102 mm - 114 mm	2572388
			Standard	Fine	S-CONE F 20	20.3 MnCr	KX350	16 mm - 32 mm	131 mm - 147 mm	2572389
			Standard	Medium	S-CONE M 20	20.3 MnCr	KX350	19 mm - 38 mm	173 mm - 190 mm	2572390
			Standard	Coarse	S-CONE C 20	20.3 MnCr	KX350	25 mm - 45 mm	220 mm - 240 mm	2572391
			Short Head	Fine	SH-CONE F 18	18.2 MnCr	KX400	10 mm - 19 mm	62 mm - 73 mm	2402582
			Short Head	Medium	SH-CONE M 20	20.3 MnCr	KX350	10 mm - 22 mm	81 mm - 93 mm	2572386

CRUSHING SHELLS AND CRUSHING CONES

Series code	Serial code	Part	Crushing tool type	Application	Version	Manganese version Content	Tool type	Minimum gap width	Feed opening	Part no.
MCO 130 S PRO	K044	crushing cone	Standard	Fine; Medium; Coarse	S-CONE 18	18.2 MnCr	KX400	16 mm - 32 mm	152 mm - 329 mm	2269083
			Short Head	Fine; Medium; Coarse	SH-CONE 20	20.3 MnCr	KX400	10 mm - 25 mm	62 mm - 132 mm	2359122
			Standard	Fine; Medium; Coarse	S-CONE 20	20.3 MnCr	KX400	16 mm - 32 mm	152 mm - 329 mm	2359123
			Short Head	Fine; Medium; Coarse	SH-CONE 18	18.2 MnCr	KX400	10 mm - 25 mm	62 mm - 132 mm	2268993
		crushing shell	Short Head	Medium	SH-CONE M 20	20.3 MnCr	KX350	10 mm - 22 mm	81 mm - 93 mm	2566555
			Short Head	Coarse	SH-CONE C 18	18.2 MnCr	KX400	13 mm - 25 mm	119 mm - 132 mm	2268971
			Short Head	Medium	SH-CONE M 18	18.2 MnCr	KX400	10 mm - 22 mm	74 mm - 87 mm	2268968
			Short Head	Fine	SH-CONE F 18	18.2 MnCr	KX400	10 mm - 19 mm	62 mm - 73 mm	2268967
			Standard	Coarse	S-CONE C 18	18.2 MnCr	KX400	25 mm - 45 mm	320 mm - 329 mm	2268981
			Standard	Medium	S-CONE M 18	18.2 MnCr	KX400	22 mm - 45 mm	228 mm - 251 mm	2268979
			Standard	Fine	S-CONE F 18	18.2 MnCr	KX400	16 mm - 32 mm	152 mm - 169 mm	2268977
			Short Head	Fine	SH-CONE F 20	20.3 MnCr	KX400	10 mm - 19 mm	62 mm - 73 mm	2359130
			Standard	Coarse	S-CONE C 20	20.3 MnCr	KX400	25 mm - 45 mm	320 mm - 329 mm	2359124

Original KLEEMANN

CRUSHING TOOLS FOR CONE CRUSHERS

CRUSHING SHELLS AND CRUSHING CONES										
Series code	Serial code	Part	Crushing tool type	Application	Version	Manganese version Content	Tool type	Minimum gap width	Feed opening	Part no.
MCO 130 S PRO	K044	crushing shell	Standard	Medium	S-CONE M 20	20.3 MnCr	KX400	22 mm - 45 mm	228 mm - 251 mm	2359126
			Standard	Fine	S-CONE F 20	20.3 MnCr	KX400	16 mm - 32 mm	152 mm - 169 mm	2359127
			Short Head	Coarse	SH-CONE C 20	20.3 MnCr	KX350	13 mm - 25 mm	102 mm - 114 mm	2566554
		Crushing tools SET for cone crushers	Standard	Coarse	S-CONE C 18	18.2 MnCr	KX400	25 mm - 45 mm	320 mm - 329 mm	2402576
			Standard	Fine	S-CONE F 18	18.2 MnCr	KX400	16 mm - 32 mm	152 mm - 169 mm	2402579
			Short Head	Coarse	SH-CONE C 18	18.2 MnCr	KX400	13 mm - 25 mm	119 mm - 132 mm	2402580
			Standard	Medium	S-CONE M 18	18.2 MnCr	KX400	22 mm - 45 mm	228 mm - 251 mm	2402577
			Short Head	Fine	SH-CONE F 20	20.3 MnCr	KX350	10 mm - 19 mm	52 mm - 62 mm	2572385
			Short Head	Medium	SH-CONE M 18	18.2 MnCr	KX400	10 mm - 22 mm	74 mm - 87 mm	2402581
			Short Head	Coarse	SH-CONE C 20	20.3 MnCr	KX350	13 mm - 25 mm	102 mm - 114 mm	2572388
			Standard	Fine	S-CONE F 20	20.3 MnCr	KX350	16 mm - 32 mm	131 mm - 147 mm	2572389
			Standard	Medium	S-CONE M 20	20.3 MnCr	KX350	19 mm - 38 mm	173 mm - 190 mm	2572390
			Standard	Coarse	S-CONE C 20	20.3 MnCr	KX350	25 mm - 45 mm	220 mm - 240 mm	2572391

CRUSHING SHELLS AND CRUSHING CONES

Series code	Serial code	Part	Crushing tool type	Application	Version	Manganese version Content	Tool type	Minimum gap width	Feed opening	Part no.
MCO 130 S PRO	K044	Crushing tools SET for cone crushers	Short Head	Fine	SH-CONE F 18	18.2 MnCr	KX400	10 mm - 19 mm	62 mm - 73 mm	2402582
			Short Head	Medium	SH-CONE M 20	20.3 MnCr	KX350	10 mm - 22 mm	81 mm - 93 mm	2572386
MCO 90 EVO	K120	crushing cone	Standard	Fine; Medium; Coarse	S-CONE 18	18.2 MnCr	KX200; KX250	16 mm - 45 mm	116 mm - 199 mm	2295672
			Short Head	Fine; Medium; Coarse	SH-CONE 18	18.2 MnCr	KX200; KX250	10 mm - 25 mm	71 mm - 142 mm	2295676
			Standard	Fine; Medium; Coarse	S-CONE 20	20.3 MnCr	KX200; KX250	16 mm - 45 mm	116 mm - 199 mm	2450546
			Short Head	Fine; Medium; Coarse	SH-CONE 20	20.3 MnCr	KX200; KX250	10 mm - 25 mm	71 mm - 142 mm	2599925
		crushing shell	Standard	Fine	S-CONE F 20	20.3 MnCr	KX200; KX250	16 mm - 32 mm	116 mm - 131 mm	2450551
			Short Head	Coarse	SH-CONE C 20	20.3 MnCr	KX200; KX250	13 mm - 25 mm	130 mm - 142 mm	2599957
			Short Head	Medium	SH-CONE M 20	20.3 MnCr	KX200; KX250	10 mm - 22 mm	99 mm - 111 mm	2599959
			Short Head	Fine	SH-CONE F 20	20.3 MnCr	KX200; KX250	10 mm - 19 mm	71 mm - 80 mm	2599960
			Standard	Medium	S-CONE M 20	20.3 MnCr	KX200; KX250	19 mm - 38 mm	138 mm - 157 mm	2450550
			Short Head	Medium	SH-CONE M 18	18.2 MnCr	KX200; KX250	10 mm - 22 mm	99 mm - 111 mm	2369191
			Standard	Fine	S-CONE F 18	18.2 MnCr	KX200; KX250	16 mm - 32 mm	116 mm - 131 mm	2295652

Original KLEEMANN

CRUSHING TOOLS FOR CONE CRUSHERS

CRUSHING SHELLS AND CRUSHING CONES										
Series code	Serial code	Part	Crushing tool type	Application	Version	Manganese version Content	Tool type	Minimum gap width	Feed opening	Part no.
MCO 90 EVO	K120	crushing shell	Short Head	Fine	SH-CONE F 18	18.2 MnCr	KX200; KX250	10 mm - 19 mm	71 mm - 80 mm	2369178
			Short Head	Coarse	SH-CONE C 18	18.2 MnCr	KX200; KX250	13 mm - 25 mm	130 mm - 142 mm	2369180
			Standard	Medium	S-CONE M 18	18.2 MnCr	KX200; KX250	19 mm - 38 mm	138 mm - 157 mm	2295649
		Crushing tools SET for cone crushers	Standard	Coarse	S-CONE C 18	18.2 MnCr	KX200; KX250	25 mm - 45 mm	179 mm - 199 mm	2615623
			Short Head	Medium	SH-CONE M 18	18.2 MnCr	KX200; KX250	10 mm - 22 mm	99 mm - 111 mm	2402523
			Standard	Fine	S-CONE F 18	18.2 MnCr	KX200; KX250	16 mm - 32 mm	116 mm - 131 mm	2615625
			Short Head	Coarse	SH-CONE C 18	18.2 MnCr	KX200; KX250	13 mm - 25 mm	130 mm - 142 mm	2615626
			Short Head	Medium	SH-CONE M 18	18.2 MnCr	KX200; KX250	10 mm - 22 mm	99 mm - 111 mm	2615628
			Short Head	Fine	SH-CONE F 18	18.2 MnCr	KX200; KX250	10 mm - 19 mm	71 mm - 80 mm	2615629
			Standard	Coarse	S-CONE C 20	20.3 MnCr	KX200; KX250	25 mm - 45 mm	179 mm - 199 mm	2615649
			Standard	Medium	S-CONE M 20	20.3 MnCr	KX200; KX250	19 mm - 38 mm	138 mm - 157 mm	2615650
			Standard	Fine	S-CONE F 20	20.3 MnCr	KX200; KX250	16 mm - 32 mm	116 mm - 131 mm	2615651
			Short Head	Coarse	SH-CONE C 20	20.3 MnCr	KX200; KX250	13 mm - 25 mm	130 mm - 142 mm	2615652

CRUSHING SHELLS AND CRUSHING CONES

Series code	Serial code	Part	Crushing tool type	Application	Version	Manganese version Content	Tool type	Minimum gap width	Feed opening	Part no.
MCO 90 EVO	K120	Crushing tools SET for cone crushers	Short Head	Medium	SH-CONE M 20	20.3 MnCr	KX200; KX250	10 mm - 22 mm	99 mm - 111 mm	2615653
			Short Head	Fine	SH-CONE F 20	20.3 MnCr	KX200; KX250	10 mm - 19 mm	71 mm - 80 mm	2615654
			Standard	Coarse	S-CONE C 20	20.3 MnCr	KX200; KX250	25 mm - 45 mm	179 mm - 199 mm	2615695
			Standard	Medium	S-CONE M 20	20.3 MnCr	KX200; KX250	19 mm - 38 mm	138 mm - 157 mm	2615697
			Standard	Fine	S-CONE F 20	20.3 MnCr	KX200; KX250	16 mm - 32 mm	116 mm - 131 mm	2615699
			Short Head	Coarse	SH-CONE C 20	20.3 MnCr	KX200; KX250	13 mm - 25 mm	130 mm - 142 mm	2615700
			Short Head	Medium	SH-CONE M 20	20.3 MnCr	KX200; KX250	10 mm - 22 mm	99 mm - 111 mm	2615701
			Short Head	Fine	SH-CONE F 20	20.3 MnCr	KX200; KX250	10 mm - 19 mm	71 mm - 80 mm	2615704
			Short Head	Coarse	SH-CONE C 18	18.2 MnCr	KX200; KX250	13 mm - 25 mm	130 mm - 142 mm	2402522
			Standard	Fine	S-CONE F 18	18.2 MnCr	KX200; KX250	16 mm - 32 mm	116 mm - 131 mm	2402521
			Standard	Medium	S-CONE M 18	18.2 MnCr	KX200; KX250	19 mm - 38 mm	138 mm - 157 mm	2402519
			Standard	Coarse	S-CONE C 18	18.2 MnCr	KX200; KX250	25 mm - 45 mm	179 mm - 199 mm	2402518
			Short Head	Fine	SH-CONE F 18	18.2 MnCr	KX200; KX250	10 mm - 19 mm	71 mm - 80 mm	2402524

Original KLEEMANN

CRUSHING TOOLS FOR CONE CRUSHERS

CRUSHING SHELLS AND CRUSHING CONES										
Series code	Serial code	Part	Crushing tool type	Application	Version	Manganese version Content	Tool type	Minimum gap width	Feed opening	Part no.
MCO 90 EVO	K120	Crushing tools SET for cone crushers	Standard	Medium	S-CONE M 18	18.2 MnCr	KX200; KX250	19 mm - 38 mm	138 mm - 157 mm	2615624
	K121	crushing cone	Standard	Fine; Medium; Coarse	S-CONE 20	20.3 MnCr	KX200; KX250	16 mm - 45 mm	116 mm - 199 mm	2450546
			Standard	Fine; Medium; Coarse	S-CONE 18	18.2 MnCr	KX200; KX250	16 mm - 45 mm	116 mm - 199 mm	2295672
			Short Head	Fine; Medium; Coarse	SH-CONE 18	18.2 MnCr	KX200; KX250	10 mm - 25 mm	71 mm - 142 mm	2295676
			Short Head	Fine; Medium; Coarse	SH-CONE 20	20.3 MnCr	KX200; KX250	10 mm - 25 mm	71 mm - 142 mm	2599925
		crushing shell	Standard	Medium	S-CONE M 18	18.2 MnCr	KX200; KX250	19 mm - 38 mm	138 mm - 157 mm	2295649
			Short Head	Medium	SH-CONE M 20	20.3 MnCr	KX200; KX250	10 mm - 22 mm	99 mm - 111 mm	2599959
			Standard	Medium	S-CONE M 20	20.3 MnCr	KX200; KX250	19 mm - 38 mm	138 mm - 157 mm	2450550
			Short Head	Coarse	SH-CONE C 20	20.3 MnCr	KX200; KX250	13 mm - 25 mm	130 mm - 142 mm	2599957
			Short Head	Medium	SH-CONE M 18	18.2 MnCr	KX200; KX250	10 mm - 22 mm	99 mm - 111 mm	2369191
			Short Head	Fine	SH-CONE F 20	20.3 MnCr	KX200; KX250	10 mm - 19 mm	71 mm - 80 mm	2599960
			Standard	Fine	S-CONE F 18	18.2 MnCr	KX200; KX250	16 mm - 32 mm	116 mm - 131 mm	2295652
			Short Head	Fine	SH-CONE F 18	18.2 MnCr	KX200; KX250	10 mm - 19 mm	71 mm - 80 mm	2369178

CRUSHING SHELLS AND CRUSHING CONES

Series code	Serial code	Part	Crushing tool type	Application	Version	Manganese version Content	Tool type	Minimum gap width	Feed opening	Part no.
MCO 90 EVO	K121	crushing shell	Short Head	Coarse	SH-CONE C 18	18.2 MnCr	KX200; KX250	13 mm - 25 mm	130 mm - 142 mm	2369180
			Standard	Fine	S-CONE F 20	20.3 MnCr	KX200; KX250	16 mm - 32 mm	116 mm - 131 mm	2450551
		Crushing tools SET for cone crushers	Standard	Fine	S-CONE F 20	20.3 MnCr	KX200; KX250	16 mm - 32 mm	116 mm - 131 mm	2615651
			Short Head	Coarse	SH-CONE C 20	20.3 MnCr	KX200; KX250	13 mm - 25 mm	130 mm - 142 mm	2615652
			Short Head	Medium	SH-CONE M 20	20.3 MnCr	KX200; KX250	10 mm - 22 mm	99 mm - 111 mm	2615653
			Short Head	Fine	SH-CONE F 20	20.3 MnCr	KX200; KX250	10 mm - 19 mm	71 mm - 80 mm	2615654
			Standard	Coarse	S-CONE C 20	20.3 MnCr	KX200; KX250	25 mm - 45 mm	179 mm - 199 mm	2615695
			Standard	Medium	S-CONE M 20	20.3 MnCr	KX200; KX250	19 mm - 38 mm	138 mm - 157 mm	2615697
			Standard	Fine	S-CONE F 20	20.3 MnCr	KX200; KX250	16 mm - 32 mm	116 mm - 131 mm	2615699
			Short Head	Coarse	SH-CONE C 20	20.3 MnCr	KX200; KX250	13 mm - 25 mm	130 mm - 142 mm	2615700
			Short Head	Medium	SH-CONE M 20	20.3 MnCr	KX200; KX250	10 mm - 22 mm	99 mm - 111 mm	2615701
			Standard	Medium	S-CONE M 20	20.3 MnCr	KX200; KX250	19 mm - 38 mm	138 mm - 157 mm	2615650
			Standard	Coarse	S-CONE C 20	20.3 MnCr	KX200; KX250	25 mm - 45 mm	179 mm - 199 mm	2615649

Original KLEEMANN

CRUSHING TOOLS FOR CONE CRUSHERS

CRUSHING SHELLS AND CRUSHING CONES										
Series code	Serial code	Part	Crushing tool type	Application	Version	Manganese version Content	Tool type	Minimum gap width	Feed opening	Part no.
MCO 90 EVO	K121	Crushing tools SET for cone crushers	Short Head	Fine	SH-CONE F 18	18.2 MnCr	KX200; KX250	10 mm - 19 mm	71 mm - 80 mm	2615629
			Short Head	Medium	SH-CONE M 18	18.2 MnCr	KX200; KX250	10 mm - 22 mm	99 mm - 111 mm	2615628
			Short Head	Coarse	SH-CONE C 18	18.2 MnCr	KX200; KX250	13 mm - 25 mm	130 mm - 142 mm	2615626
			Standard	Fine	S-CONE F 18	18.2 MnCr	KX200; KX250	16 mm - 32 mm	116 mm - 131 mm	2615625
			Standard	Medium	S-CONE M 18	18.2 MnCr	KX200; KX250	19 mm - 38 mm	138 mm - 157 mm	2615624
			Standard	Coarse	S-CONE C 18	18.2 MnCr	KX200; KX250	25 mm - 45 mm	179 mm - 199 mm	2615623
			Short Head	Fine	SH-CONE F 18	18.2 MnCr	KX200; KX250	10 mm - 19 mm	71 mm - 80 mm	2402524
			Short Head	Fine	SH-CONE F 20	20.3 MnCr	KX200; KX250	10 mm - 19 mm	71 mm - 80 mm	2615704
			Short Head	Coarse	SH-CONE C 18	18.2 MnCr	KX200; KX250	13 mm - 25 mm	130 mm - 142 mm	2402522
			Standard	Fine	S-CONE F 18	18.2 MnCr	KX200; KX250	16 mm - 32 mm	116 mm - 131 mm	2402521
			Standard	Medium	S-CONE M 18	18.2 MnCr	KX200; KX250	19 mm - 38 mm	138 mm - 157 mm	2402519
			Standard	Coarse	S-CONE C 18	18.2 MnCr	KX200; KX250	25 mm - 45 mm	179 mm - 199 mm	2402518
			Short Head	Medium	SH-CONE M 18	18.2 MnCr	KX200; KX250	10 mm - 22 mm	99 mm - 111 mm	2402523

ABRASION LINING

To protect the crusher inlet against damage, the housing is fully lined with highly wear-resistant original KLEEMANN plates.

KLEEMANN Resistance Steel (KRS) is available in three quality levels. KRS 40, which can resist hardness of up to 430 HV and has a high impact resistance, is recommended, in particular, for material with very low abrasiveness such as limestone or for the recycling of rubble and concrete.

KRS 50 is recommended for stone with medium abrasiveness and recycling and for materials with a hardness of up to 530 HV.

KRS HW, designed for material with high abrasiveness, has a significantly longer service life. Plates provided with a 10 mm thick wear layer can withstand hardnesses of up to 740 HV.

KRS 60 can withstand a hardness of up to 600 HV and is particularly suitable for very highly abrasive material and uncrushable materials (e.g. steel) in the feed material.

> Read more online

Original KLEEMANN

ABRASION LINING

RUBBER CURTAIN

Genuine KLEEMANN fibre-reinforced rubber curtains are attached to the crusher infeed to prevent material and dust from escaping.

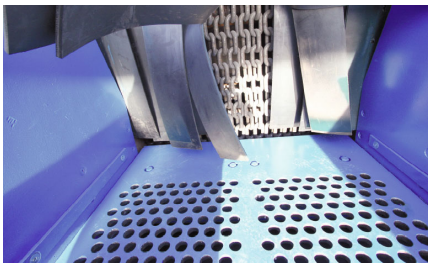

RUBBER CURTAIN					
Series code	Serial code	Series range	Position	Requirement	Part no.
MR 100 R	K012	1 - 9999	for crusher inlet	9 pc.	F10579704
MR 100 Z	K013	10 - 9999	for crusher inlet	9 pc.	F10579704
MR 110 R EVO	K016	1 - 9999	for crusher inlet	10 pc.	F10473414
MR 110 Z EVO	K017	3 - 9999	for crusher inlet	10 pc.	F10473414
MR 110 EVO	K018, K019	1 - 9999	for crusher inlet	10 pc.	F10473414
MR 122 PRO	K062	66 - 9999	for crusher inlet	14 pc.	F10503364
MR 130 R EVO	K023	1 - 199	for crusher inlet	14 pc.	F10473414
		200 - 9999	for crusher inlet	13 pc.	F20011339
MR 130 Z EVO	K024	70 - 299	for crusher inlet	14 pc.	F10473414
		301 - 9999	for crusher inlet	13 pc.	F20011339
MR 130 EVO	K077, K078	1 - 9999	for crusher inlet	13 pc.	F20011339
MR 122i PRO	K031	1 - 9999	for crusher inlet	14 pc.	F10503364
MR 130 PRO	K125, K124	1 - 9999	for crusher inlet	13 pc.	F20011339
MR 100 NEO	K136	1 - 9999	for crusher inlet	7 pc.	F10473414
MR 100 NEOe	K138	1 - 9999	for crusher inlet	7 pc.	F10473414

CHAIN CURTAIN

Genuine KLEEMANN chain curtains are particularly wear-resistant and, in combination with rubber curtains, ensure that neither material nor dust can escape from the crusher housing.

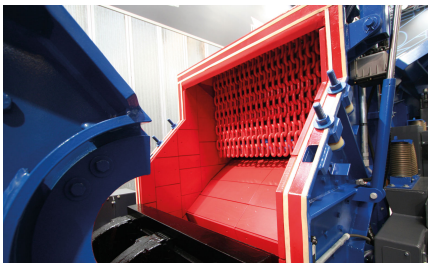

CHAIN CURTAIN					
Series code	Serial code	Series range	Position	Requirement	Part no.
MR 100 R	K012	33 - 9999	for crusher inlet	18 pc.	F10331504
MR 100 Z	K013	10 - 9999	for crusher inlet	18 pc.	F10331504
MR 110 R EVO	K016	1 - 9999	for crusher inlet	18 pc.	F10473404
MR 110 Z EVO	K017	3 - 9999	for crusher inlet	18 pc.	F10473404
MR 110 EVO	K018, K019	1 - 9999	for crusher inlet	18 pc.	F10473404
MR 122 PRO	K062	66 - 9999	for crusher inlet	16 pc.	F20000489
			for crusher inlet	20 pc.	F20002132
MR 130 R EVO	K023	1 - 199	for crusher inlet	21 pc.	F10473404
		200 - 9999	for crusher inlet	21 pc.	F20002132
MR 130 Z EVO	K024	70 - 299	for crusher inlet	21 pc.	F10473404
		301 - 9999	for crusher inlet	21 pc.	F20002132
MR 130 EVO	K077, K078	1 - 9999	for crusher inlet	21 pc.	F20002132
MR 122i PRO	K031	1 - 9999	for crusher inlet	16 pc.	F20000489
			for crusher inlet	20 pc.	F20002132
MR 130 PRO	K125, K124	1 - 9999	for crusher inlet	21 pc.	F20002132
MR 100 NEO	K136	1 - 9999	for crusher inlet	14 pc.	F10473404
MR 100 NEOe	K138	1 - 9999	for crusher inlet	14 pc.	F10473404

Original KLEEMANN

ABRASION LINING

WEAR PLATES

Genuine KLEEMANN wear plates protect the high-quality crusher housing from damage.

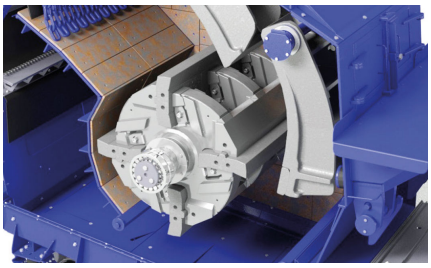

WEAR PLATES							
Series code	Serial code	Series range	Part	Version	Profile	Position	Part no.
MC 110 R EVO	K005	1 - 9999	Wear plate	KRS 40	special variant	for vibrating feeder / side	2416791
				KRS 40	special variant	for bypass	2249270
			Wear plate	KRS 40	special variant	for vibrating feeder / side	2261547
				KRS 40	special variant	for vibrating feeder / side	2261429
				KRS 40	special variant	for crusher out-let	2294387
				KRS 40	special variant	for crusher out-let	2294380
				KRS 40	special variant	for vibrating feeder / rear wall	2261635
				KRS 40	special variant	for vibrating feeder / side	2261570
				KRS 40	special variant	for vibrating feeder / side	2261598
		102 - 9999	Wear plate	KRS 40	special variant	for vibrating feeder / side	2416801
		106 - 9999	Wear plate	KRS 40	special variant	for vibrating feeder / base	2298078
				KRS 40	special variant	for vibrating feeder / base	2298079
				KRS 40	special variant	for vibrating feeder / rear wall	2298075
				KRS 40	special variant	for vibrating feeder / side	2248262
				KRS 40	special variant	for vibrating feeder / side	2416814
				KRS 40	special variant	for vibrating feeder / side	2416834
MC 110 Ri EVO	K014	1 - 9999	Wear plate	KRS 40	special variant	for bypass	2249270
				KRS 40	special variant	for vibrating feeder / side	2416791

WEAR PLATES

Series code	Serial code	Series range	Part	Version	Profile	Position	Part no.
MC 110 Ri EVO	K014	1 - 9999	Wear plate	KRS 40	special variant	for crusher outlet	2294380
				KRS 40	special variant	for crusher outlet	2294387
				KRS 40	special variant	for vibrating feeder / side	2261547
				KRS 40	special variant	for vibrating feeder / side	2261598
				KRS 40	special variant	for vibrating feeder / side	2261429
				KRS 40	special variant	for vibrating feeder / side	2261570
				KRS 40	special variant	for vibrating feeder / rear wall	2261635
		102 - 9999	Wear plate	KRS 40	special variant	for vibrating feeder / side	2416801
		106 - 9999	Wear plate	KRS 40	special variant	for vibrating feeder / side	2416834
				KRS 40	special variant	for vibrating feeder / side	2248262
				KRS 40	special variant	for vibrating feeder / side	2416814
				KRS 40	special variant	for vibrating feeder / rear wall	2298075
				KRS 40	special variant	for vibrating feeder / base	2298079
				KRS 40	special variant	for vibrating feeder / base	2298078
MC 110 Z EVO	K006	1 - 9999	Wear plate	KRS 40	special variant	for bypass	2249270
			Wear plate	KRS 40	special variant	for vibrating feeder / base	2293310
				KRS 40	special variant	for vibrating feeder / rear wall	2293311
				KRS 40	special variant	for vibrating feeder / side	2248262
				KRS 40	special variant	for vibrating feeder / side	2252886
				KRS 40	special variant	for crusher outlet	2294380
				KRS 40	special variant	for vibrating feeder / base	2293307
				KRS 40	special variant	for vibrating feeder / side	2252882
				KRS 40	special variant	for crusher outlet	2294387

ABRASION LINING

WEAR PLATES							
Series code	Serial code	Series range	Part	Version	Profile	Position	Part no.
MC 110 Z EVO	K006	1 - 9999	Wear plate	KRS 40	special variant	for vibrating feeder / side	2252851
				KRS 40	special variant	for vibrating feeder / side	2252846
				KRS 40	special variant	for vibrating feeder / side	2252908
		169 - 9999	Wear plate	KRS 40	special variant	for vibrating feeder / side	2410809
				KRS 40	special variant	for vibrating feeder / side	2410806
MC 110 Zi EVO	K015	1 - 9999	Wear plate	KRS 40	special variant	for bypass	2249270
			Wear plate	KRS 40	special variant	for crusher out-let	2294387
				KRS 40	special variant	for crusher out-let	2294380
				KRS 40	special variant	for vibrating feeder / base	2293307
				KRS 40	special variant	for vibrating feeder / base	2293310
				KRS 40	special variant	for vibrating feeder / side	2252846
				KRS 40	special variant	for vibrating feeder / side	2248262
				KRS 40	special variant	for vibrating feeder / side	2252908
				KRS 40	special variant	for vibrating feeder / rear wall	2293311
				KRS 40	special variant	for vibrating feeder / side	2252851
				KRS 40	special variant	for vibrating feeder / side	2252886
				KRS 40	special variant	for vibrating feeder / side	2252882
		169 - 9999	Wear plate	KRS 40	special variant	for vibrating feeder / side	2410806
				KRS 40	special variant	for vibrating feeder / side	2410809
MCO 9 EVO	K072	1 - 9999	Hatch lock	KRS 40	special variant	for crusher mainframe	3114051
				KRS 40	special variant	for crusher mainframe	2337101
			Wear plate	KRS 40	special variant	for crusher mainframe	2335070
			Wear element	KRS 40	special variant	for crusher mainframe	3114106
			Wear ring	KRS 40	special variant	for crusher countershaft	3113227
			Wear segment	KRS 40	special variant	for crusher mainframe	WX3300732

WEAR PLATES

Series code	Serial code	Series range	Part	Version	Profile	Position	Part no.
MCO 9 EVO	K072	1 - 9999	Wear segment	KRS 40	special variant	for crusher cam	2740871
			Wear element	KRS 40	special variant	for crusher mainframe	3104315
				KRS 40	special variant	for crusher mainframe	3104307
		61 - 9999	Wear plate	KRS 40	special variant	for crusher outlet	2449556
				KRS 40	special variant	for crusher outlet	2449555
				KRS 40	special variant	for crusher outlet	2449554
MCO 9i EVO	K073	1 - 9999	Hatch lock	KRS 40	special variant	for crusher mainframe	3114051
				KRS 40	special variant	for crusher mainframe	2337101
			Wear plate	KRS 40	special variant	for crusher outlet	2449554
				KRS 40	special variant	for crusher outlet	2449555
				KRS 40	special variant	for crusher outlet	2449556
			Wear plate	KRS 40	special variant	for crusher mainframe	2335070
			Wear element	KRS 40	special variant	for crusher mainframe	3114106
			Wear ring	KRS 40	special variant	for crusher countershaft	3113227
			Wear segment	KRS 40	special variant	for crusher cam	2740871
				KRS 40	special variant	for crusher mainframe	WX3300732
			Wear element	KRS 40	special variant	for crusher mainframe	3104315
				KRS 40	special variant	for crusher mainframe	3104307
MCO 9S EVO	K074	1 - 9999	Hatch lock	KRS 40	special variant	for crusher mainframe	3114051
				KRS 40	special variant	for crusher mainframe	2337101
			Wear plate	KRS 40	special variant	for crusher outlet	2449554
				KRS 40	special variant	for crusher outlet	2449556
				KRS 40	special variant	for crusher outlet	2449555
			Wear plate	KRS 40	special variant	for crusher mainframe	2335070
			Wear element	KRS 40	special variant	for crusher mainframe	3114106
			Wear ring	KRS 40	special variant	for crusher countershaft	3113227

ABRASION LINING

WEAR PLATES							
Series code	Serial code	Series range	Part	Version	Profile	Position	Part no.
MCO 9S EVO	K074	1 - 9999	Wear segment	KRS 40	special variant	for crusher mainframe	WX3300732
				KRS 40	special variant	for crusher cam	2740871
			Wear element	KRS 40	special variant	for crusher mainframe	3104315
				KRS 40	special variant	for crusher mainframe	3104307
MCO 9Si EVO	K075	1 - 9999	Hatch lock	KRS 40	special variant	for crusher mainframe	2337101
				KRS 40	special variant	for crusher mainframe	3114051
			Wear plate	KRS 40	special variant	for crusher outlet	2449555
				KRS 40	special variant	for crusher outlet	2449556
				KRS 40	special variant	for crusher outlet	2449554
			Wear plate	KRS 40	special variant	for crusher mainframe	2335070
			Wear element	KRS 40	special variant	for crusher mainframe	3114106
			Wear ring	KRS 40	special variant	for crusher countershaft	3113227
			Wear segment	KRS 40	special variant	for crusher mainframe	WX3300732
				KRS 40	special variant	for crusher cam	2740871
			Wear element	KRS 40	special variant	for crusher mainframe	3104307
				KRS 40	special variant	for crusher mainframe	3104315
MR 100 R	K012	33 - 9999	Wear lining set	KRS 40	miscellaneous	for crusher housing	F60000008
				KRS 40	miscellaneous	for crusher housing	F10617779
MR 110 R EVO	K016	1 - 9999	Wear lining set	KRS 40	miscellaneous	for screen casing	2998908
				KRS 40	miscellaneous	for feed hopper	2998570
				KRS 60	miscellaneous	for crusher housing / zone with limited accessibility	WX3182095
				KRS 40	miscellaneous	for crusher housing	F60000018
				KRS 60	miscellaneous	for crusher housing	WX3182093
			Wear plate	KRS 40	rectangular	for vibrating feeder / base	F20004948

WEAR PLATES

Series code	Serial code	Series range	Part	Version	Profile	Position	Part no.
MR 110 R EVO	K016	1 - 9999	Wear plate	KRS 40	rectangular	for vibrating feeder / rear wall	F20004950
				KRS 40	rectangular	for vibrating feeder side wall	F20004953
				KRS 40	special variant	for ejector chute	2200299
				KRS 40	special variant	for ejector chute	2194658
				KRS 40	special variant	for ejector chute	2194655
				KRS 40	special variant	for ejector chute	2194653
				KRS 40	special variant	for screen casing	2261435
				KRS 60	triangular	for crusher housing	WX3181833
				KRS 40	rectangular	for vibrating feeder / base	F20004949
				KRS 60	rectangular	for crusher housing	3061760
				KRS 60	square	for crusher housing	3061770
				KRS 50	triangular	for crusher housing	2462226
				KRS 40	square	for crusher housing	F20009533
				KRS 40	triangular	for crusher housing	F20009535
				KRS HW	square	for crusher housing	2234056
				KRS HW	rectangular	for crusher housing	2234057
				KRS HW	triangular	for crusher housing	2245882
				KRS 50	square	for crusher housing	2389211
				KRS 50	rectangular	for crusher housing	2389216
		7 - 9999	Wear plate	KRS 40	rectangular	for vibrating extractor / base	2234936
MR 110 Z EVO	K017	1 - 9999	Wear lining set	KRS 60	miscellaneous	for crusher housing / zone with limited accessibility	WX3182095
				KRS 40	miscellaneous	for crusher housing	F60000018
				KRS 60	miscellaneous	for crusher housing	WX3182093
			Wear plate	KRS 40	rectangular	for vibrating extractor / base	2234936

ABRASION LINING

WEAR PLATES							
Series code	Serial code	Series range	Part	Version	Profile	Position	Part no.
MR 110 Z EVO	K017	1 - 9999	Wear plate	KRS 40	special variant	for ejector chute	2200299
				KRS 40	special variant	for ejector chute	2194658
				KRS 40	special variant	for ejector chute	2194655
				KRS 40	special variant	for ejector chute	2194653
				KRS 40	special variant	for screen casing	2261435
				KRS 60	rectangular	for crusher housing	3061760
				KRS 60	square	for crusher housing	3061770
				KRS 60	triangular	for crusher housing	WX3181833
		3 - 9999	Wear lining set	KRS 40	miscellaneous	for feed hopper	2998570
				KRS 40	miscellaneous	for screen casing	2998908
			Wear plate	KRS 40	square	for crusher housing	F20009533
				KRS 40	rectangular	for crusher housing	F20009534
				KRS 40	triangular	for crusher housing	F20009535
				KRS 50	square	for crusher housing	2389211
				KRS HW	triangular	for crusher housing	2245882
				KRS HW	rectangular	for crusher housing	2234057
				KRS 50	triangular	for crusher housing	2462226
				KRS 50	rectangular	for crusher housing	2389216
				KRS HW	square	for crusher housing	2234056
MR 110 EVO	K018	1 - 9999	Wear lining set	KRS 60	miscellaneous	for crusher housing	WX3182093
				KRS 60	miscellaneous	for crusher housing / zone with limited accessibility	WX3182095
				KRS 40	miscellaneous	for crusher housing	2966884
			Wear plate	KRS 40	special variant	for crusher housing	F20009130
				KRS 40	special variant	for crusher housing	F20009129
				KRS 40	special variant	for crusher housing	F20009128

WEAR PLATES							
Series code	Serial code	Series range	Part	Version	Profile	Position	Part no.
MR 110 EVO	K018	1 - 9999	Wear plate	KRS 40	special variant	for crusher housing	F20009134
				KRS 40	special variant	for crusher housing	F20009151
				KRS 40	special variant	for crusher housing	F20009152
				KRS 40	special variant	for crusher housing	F20009153
				KRS 40	special variant	for crusher housing	2318722
				KRS 40	special variant	for crusher housing	2318724
				KRS 40	special variant	for crusher housing	2318727
				KRS 40	special variant	for crusher housing	2318728
				KRS 40	special variant	for crusher housing	2318729
				KRS 40	special variant	for crusher housing	2286538
				KRS 60	square	for crusher housing	3061770
				KRS 60	rectangular	for crusher housing	3061760
				KRS 40	special variant	for crusher housing	F20013112
				KRS 40	special variant	for crusher housing	F20009645
				KRS 40	special variant	for crusher housing	F20009180
				KRS 40	special variant	for screen casing	2261236
				KRS 40	special variant	for crusher housing	F20009132
				KRS HW	square	for crusher housing	2234056
				KRS 40	special variant	for crusher housing	F20009125
				KRS 40	special variant	for crusher housing	F20009127
				KRS 40	triangular	for crusher housing	F20009535
				KRS 40	rectangular	for crusher housing	F20009534
				KRS 40	square	for crusher housing	F20009533
				KRS 40	special variant	for screen casing	2647790
				KRS HW	rectangular	for crusher housing	2234057
				KRS HW	triangular	for crusher housing	2245882

ABRASION LINING

WEAR PLATES							
Series code	Serial code	Series range	Part	Version	Profile	Position	Part no.
MR 110 EVO	K018	1 - 9999	Wear plate	KRS 50	square	for crusher housing	2389211
				KRS 50	rectangular	for crusher housing	2389216
				KRS 50	triangular	for crusher housing	2462226
				KRS 60	triangular	for crusher housing	WX3181833
		1 - 99999	Wear lining set	KRS 40	miscellaneous	for screen casing	2998908
				KRS 40	miscellaneous	for feed hopper	2998570
		199 - 9999	Wear plate	KRS 40	special variant	for screen casing	2558173
				KRS 40	special variant	for screen casing	2261435
				KRS 40	special variant	for screen casing	2558166
	K019	1 - 9999	Wear lining set	KRS 60	miscellaneous	for crusher housing	WX3182093
				KRS 60	miscellaneous	for crusher housing / zone with limited accessibility	WX3182095
				KRS 40	miscellaneous	for crusher housing	2966884
			Wear plate	KRS 40	special variant	for crusher housing	2318728
				KRS 40	special variant	for crusher housing	2318729
				KRS 60	square	for crusher housing	3061770
				KRS 60	rectangular	for crusher housing	3061760
				KRS 40	special variant	for crusher housing	F20013112
				KRS 40	special variant	for crusher housing	F20009645
				KRS 40	special variant	for crusher housing	F20009180
				KRS 40	special variant	for crusher housing	F20009125
				KRS 40	special variant	for crusher housing	F20009127
				KRS 40	special variant	for crusher housing	F20009132
				KRS 40	special variant	for crusher housing	F20009130
				KRS 40	special variant	for crusher housing	F20009129
				KRS 40	special variant	for crusher housing	F20009128

WEAR PLATES

Series code	Serial code	Series range	Part	Version	Profile	Position	Part no.
MR 110 EVO	K019	1 - 9999	Wear plate	KRS 40	special variant	for crusher housing	F20009134
				KRS 40	special variant	for crusher housing	F20009151
				KRS 40	special variant	for crusher housing	F20009152
				KRS 40	special variant	for crusher housing	F20009153
				KRS 50	triangular	for crusher housing	2462226
				KRS 50	rectangular	for crusher housing	2389216
				KRS 50	square	for crusher housing	2389211
				KRS HW	triangular	for crusher housing	2245882
				KRS HW	rectangular	for crusher housing	2234057
				KRS 60	triangular	for crusher housing	WX3181833
				KRS 40	square	for crusher housing	F20009533
				KRS 40	rectangular	for crusher housing	F20009534
				KRS 40	triangular	for crusher housing	F20009535
				KRS HW	square	for crusher housing	2234056
		1 - 99999	Wear lining set	KRS 40	miscellaneous	for screen casing	2998908
				KRS 40	miscellaneous	for feed hopper	2998570
		67 - 9999	Wear plate	KRS 40	special variant	for screen casing	2261435
				KRS 40	special variant	for screen casing	2558166
				KRS 40	special variant	for screen casing	2558173
						for screen casing	
MR 122 PRO	K062	66 - 9999	Wear plate	KRS HW	rectangular	for crusher housing	2521336
MR 130 R EVO	K023	1 - 199	Wear plate	KRS 40	square	for crusher housing	F20009533
				KRS 50	rectangular	for crusher housing	2389216
				KRS 50	square	for crusher housing	2389211
				KRS 40	rectangular	for crusher housing	F20009534
				KRS HW	rectangular	for crusher housing	2234057

Original KLEEMANN

ABRASION LINING

WEAR PLATES							
Series code	Serial code	Series range	Part	Version	Profile	Position	Part no.
MR 130 R EVO	K023	1 - 199	Wear plate	KRS HW	square	for crusher housing	2234056
				KRS 40	triangular	for crusher housing	F20009535
				KRS HW	triangular	for crusher housing	2245882
		200 - 9999	Wear lining set	KRS 40	miscellaneous	for rotor area	F20011929
				KRS 40	miscellaneous	for crusher housing	F60000017
				KRS 40	miscellaneous	for screen casing	2998866
				KRS 40	miscellaneous	for feed hopper	2998502
			Wear plate	KRS 50	rectangular	for crusher housing	2389216
				KRS HW	square	for crusher housing	2234056
				KRS HW	triangular	for crusher housing	2245882
				KRS HW	rectangular	for crusher housing	2234057
				KRS HW	rectangular	for lower crusher housing	2797999
				KRS 40	square	for crusher housing	F20009533
				KRS 50	square	for crusher housing	2389211
MR 130 Z EVO	K024	1 - 299	Wear plate	KRS HW	square	for crusher housing	2234056
				KRS 50	square	for crusher housing	2389211
				KRS 50	rectangular	for crusher housing	2389216
				KRS HW	rectangular	for crusher housing	2234057
				KRS 40	square	for crusher housing	F20009533
				KRS HW	triangular	for crusher housing	2245882
		301 - 9999	Wear lining set	KRS 40	miscellaneous	for crusher housing	F60000017
				KRS 40	miscellaneous	for screen casing	2998866
				KRS 40	miscellaneous	for feed hopper	2998502
				KRS 40	miscellaneous	for rotor area	F20011929
			Wear plate	KRS HW	rectangular	for lower crusher housing	2797999
				KRS HW	rectangular	for crusher housing	2234057

WEAR PLATES

Series code	Serial code	Series range	Part	Version	Profile	Position	Part no.
MR 130 Z EVO	K024	301 - 9999	Wear plate	KRS HW	square	for crusher housing	2234056
				KRS 40	square	for crusher housing	F20009533
				KRS HW	triangular	for crusher housing	2245882
				KRS 50	square	for crusher housing	2389211
				KRS 50	rectangular	for crusher housing	2389216
MR 130 EVO	K077	1 - 9999	Abrasion lining	Gummi	miscellaneous	for vibrating extractor	2954464
			Wear lining set	KRS 40	miscellaneous	for oversize grain conveyor ejector chute	2460743
				KRS 60	miscellaneous	for crusher housing / zone with limited accessibility	WX3182097
				KRS HW	miscellaneous	for crusher housing	2966885
				KRS 60	miscellaneous	for crusher housing	WX3182093
				Gummi	miscellaneous	for vibrating extractor	3053502
				KRS 40	miscellaneous	for crusher housing	2966884
			Wear plate	KRS 40	rectangular	for vibrating feeder / left	F20008616
				KRS 40	rectangular	for vibrating extractor	2288301
				KRS 40	rectangular	for vibrating extractor	2288303
				KRS 40	rectangular	for oversize grain conveyor ejector chute	2460315
				KRS HW	rectangular	for oversize grain conveyor ejector chute	2651456
				KRS 40	special variant	for oversize grain conveyor ejector chute	2460427
				KRS HW	special variant	for oversize grain conveyor ejector chute	2651459

ABRASION LINING

WEAR PLATES							
Series code	Serial code	Series range	Part	Version	Profile	Position	Part no.
MR 130 EVO	K077	1 - 9999	Wear plate	KRS 40	special variant	for oversize grain conveyor ejector chute	2460712
				KRS HW	special variant	for oversize grain conveyor ejector chute	2651461
				KRS 40	special variant	for oversize grain conveyor ejector chute	2460479
				KRS HW	special variant	for oversize grain conveyor ejector chute	2651462
				KRS 40	special variant	for oversize grain conveyor ejector chute	2460739
				KRS HW	special variant	for oversize grain conveyor ejector chute	2651464
				KRS 60	rectangular	for crusher housing	3061760
				KRS 40	special variant	for feed hopper	2998444
				KRS 40	special variant	for feed hopper	2998471
				KRS 40	rectangular	for vibrating feeder / base	F20010854
				KRS 40	rectangular	for vibrating feeder / rear wall	F20010855
				KRS 40	rectangular	for vibrating feeder / side	F20008613
				KRS 40	rectangular	for vibrating feeder / side	F20008612
				KRS 40	special variant	for screen casing	2261435
				KRS 40	special variant	for screen casing	F20011469
				KRS HW	rectangular	for lower crusher housing	2798000
				KRS HW	rectangular	for lower crusher housing	2797999
				KRS 40	rectangular	for lower crusher housing	F20011161
				KRS 40	rectangular	for lower crusher housing	F20011162

WEAR PLATES

Series code	Serial code	Series range	Part	Version	Profile	Position	Part no.
MR 130 EVO	K077	1 - 9999	Wear plate	KRS 40	rectangular	for lower crusher housing	F20011160
				KRS HW	rectangular	for lower crusher housing	2797998
				KRS 60	square	for crusher housing	3061770
				KRS 40	square	for crusher housing	F20009533
				KRS 40	rectangular	for crusher housing	F20009534
				KRS 40	triangular	for crusher housing	F20009535
				KRS HW	square	for crusher housing	2234056
				KRS HW	rectangular	for crusher housing	2234057
				KRS HW	triangular	for crusher housing	2245882
				KRS 50	square	for crusher housing	2389211
				KRS 50	rectangular	for crusher housing	2389216
				KRS 50	triangular	for crusher housing	2462226
				KRS 60	triangular	for crusher housing	WX3181833
		1 - 99999	Wear lining set	KRS 40	miscellaneous	for feed hopper	2998502
				KRS 40	miscellaneous	for screen casing	2998866
		4 - 9999	Wear plate	KRS 40	special variant	for screen casing	2353118
		236 - 9999	Wear plate	KRS 40	special variant	for screen casing	2647790
				KRS 40	special variant	for screen casing	2647926
				KRS 40	special variant	for screen casing	2647908
	K078	1 - 9999	Abrasion lining	Gummi	miscellaneous	for vibrating extractor	2954464
			Wear lining set	KRS 40	miscellaneous	for oversize grain conveyor ejector chute	2460743
				KRS HW	miscellaneous	for crusher housing	2966885
				Gummi	miscellaneous	for vibrating extractor	3053502
				KRS 40	miscellaneous	for screen casing	2998866
				KRS 60	miscellaneous	for crusher housing	WX3182093

Original KLEEMANN

ABRASION LINING

WEAR PLATES							
Series code	Serial code	Series range	Part	Version	Profile	Position	Part no.
MR 130 EVO	K078	1 - 9999	Wear lining set	KRS 60	miscellaneous	for crusher housing / zone with limited accessibility	WX3182097
				KRS 40	miscellaneous	for crusher housing	2966884
				KRS 40	miscellaneous	for feed hopper	2998502
			Wear plate	KRS 40	rectangular	for vibrating feeder / side	F20008613
				KRS 40	rectangular	for vibrating feeder / side	F20008612
				KRS 40	rectangular	for vibrating feeder / left	F20008616
				KRS 40	rectangular	for vibrating extractor	2288301
				KRS 40	rectangular	for vibrating extractor	2288303
				KRS 40	rectangular	for oversize grain conveyor ejector chute	2460315
				KRS HW	rectangular	for oversize grain conveyor ejector chute	2651456
				KRS 40	special variant	for oversize grain conveyor ejector chute	2460427
				KRS HW	special variant	for oversize grain conveyor ejector chute	2651459
				KRS 40	special variant	for oversize grain conveyor ejector chute	2460712
				KRS HW	special variant	for oversize grain conveyor ejector chute	2651461
				KRS 40	special variant	for oversize grain conveyor ejector chute	2460479
				KRS HW	special variant	for oversize grain conveyor ejector chute	2651462

WEAR PLATES

Series code	Serial code	Series range	Part	Version	Profile	Position	Part no.
MR 130 EVO	K078	1 - 9999	Wear plate	KRS 40	special variant	for oversize grain conveyor ejector chute	2460739
				KRS HW	special variant	for oversize grain conveyor ejector chute	2651464
				KRS 40	special variant	for screen casing	2261435
				KRS 40	special variant	for screen casing	F20011469
				KRS 40	rectangular	for vibrating feeder / rear wall	F20010855
				KRS 40	rectangular	for vibrating feeder / base	F20010854
				KRS 40	special variant	for feed hopper	2998471
				KRS 40	special variant	for feed hopper	2998444
				KRS 60	rectangular	for crusher housing	3061760
				KRS 60	square	for crusher housing	3061770
				KRS HW	rectangular	for lower crusher housing	2797998
				KRS 40	rectangular	for lower crusher housing	F20011160
				KRS 40	rectangular	for lower crusher housing	F20011161
				KRS 40	rectangular	for lower crusher housing	F20011162
				KRS HW	rectangular	for lower crusher housing	2798000
				KRS HW	rectangular	for lower crusher housing	2797999
				KRS 40	square	for crusher housing	F20009533
				KRS 40	rectangular	for crusher housing	F20009534
				KRS 40	triangular	for crusher housing	F20009535
				KRS HW	square	for crusher housing	2234056
				KRS HW	rectangular	for crusher housing	2234057
				KRS HW	triangular	for crusher housing	2245882
				KRS 50	square	for crusher housing	2389211

Original KLEEMANN

ABRASION LINING

WEAR PLATES							
Series code	Serial code	Series range	Part	Version	Profile	Position	Part no.
MR 130 EVO	K078	1 - 9999	Wear plate	KRS 50	rectangular	for crusher housing	2389216
				KRS 50	triangular	for crusher housing	2462226
				KRS 60	triangular	for crusher housing	WX3181833
		4 - 9999	Wear plate	KRS 40	special variant	for screen casing	2353118
		236 - 9999	Wear plate	KRS 40	special variant	for screen casing	2647908
				KRS 40	special variant	for screen casing	2647926
				KRS 40	special variant	for screen casing	2647790
MSC 702 EVO	K083	10 - 9999	Wear plate	KRS 40	special variant	for feeding conveyor	2573582
		24 - 9999	Wear plate	KRS 40	special variant	for feeding conveyor	2573584
MSC 703 EVO	K084	10 - 9999	Wear plate	KRS 40	special variant	for feeding conveyor	2573582
				KRS 40	special variant	for screen casing	2466096
				KRS 40	special variant	for feeding conveyor	2573584
MSC 703i EVO	K104	10 - 9999	Wear plate	KRS 40	special variant	for feeding conveyor	2573582
				KRS 40	special variant	for screen casing	2466096
				KRS 40	special variant	for feeding conveyor	2573584
MSC 952 EVO	K085	10 - 9999	Wear plate	KRS 40	special variant	for feeding conveyor	2573584
				KRS 40	special variant	for feeding conveyor	2573582
MSC 952i EVO	K105	10 - 9999	Wear plate	KRS 40	special variant	for feeding conveyor	2573584
				KRS 40	special variant	for feeding conveyor	2573582
MSC 953 EVO	K086	10 - 9999	Wear plate	KRS 40	special variant	for feeding conveyor	2573582
				KRS 40	special variant	for screen casing	2466096
				KRS 40	special variant	for feeding conveyor	2573584
MSC 953i EVO	K106	10 - 9999	Wear plate	KRS 40	special variant	for feeding conveyor	2573582
				KRS 40	special variant	for screen casing	2466096
				KRS 40	special variant	for feeding conveyor	2573584
MC 110 EVO	K116	1 - 9999	Wear lining set	KRS 40	miscellaneous	for feed hopper	2998570

WEAR PLATES

Series code	Serial code	Series range	Part	Version	Profile	Position	Part no.
MC 110 EVO	K116	1 - 9999	Wear plate	KRS 40	rectangular	for vibrating feeder / base	2656626
				KRS 40	rectangular	for deflector plate	2820877
				KRS 40	rectangular	for vibrating feeder / left	2656629
				KRS 40	rectangular	for vibrating feeder / right	2656632
				KRS 40	rectangular	for vibrating feeder / left	2656634
				KRS 40	rectangular	for vibrating feeder / rear wall	2656628
				KRS 60	square	for deflector plate	3061770
				KRS 40	rectangular	for vibrating feeder / base	2656627
				KRS 40	square	for deflector plate	F20009533
				KRS 40	rectangular	for deflector plate	2820851
				KRS 40	rectangular	for deflector plate	F20009534
			Wear plate	KRS 40	special variant	for crusher outlet	2294387
				KRS 40	special variant	for crusher outlet	2294380
MCO 90 EVO	K120	1 - 9999	Hatch lock	KRS 40	special variant	for crusher mainframe	3114051
				KRS 40	special variant	for crusher mainframe	2337101
			Wear plate	KRS 40	special variant	for screen casing	2558166
				KRS 40	special variant	for screen casing	2647790
				KRS 40	special variant	for screen casing	2558173
				KRS 40	special variant	for screen casing	2261435
			Wear plate	KRS 40	special variant	for crusher mainframe	2335070
			Wear plate	KRS 40	special variant	for crusher outlet	2786938
			Wear ring	KRS 40	special variant	for crusher countershaft	3113227
			Wear segment	KRS 40	special variant	for crusher mainframe	WX3300732
				KRS 40	special variant	for crusher cam	2740871
			Wear element	KRS 40	special variant	for crusher mainframe	3104315

Original KLEEMANN

ABRASION LINING

WEAR PLATES							
Series code	Serial code	Series range	Part	Version	Profile	Position	Part no.
MCO 90 EVO	K120	1 - 9999				for crusher mainframe	
						for screen casing	
		2 - 9999	Wear plate	KRS 40	special variant	for crusher outlet	2786937
		15 - 9999	Wear plate	KRS 40	special variant	for ejector chute	2972467
				KRS 40	special variant	for ejector chute	2972359
				KRS 40	special variant	for ejector chute	2972292
	K121	1 - 9999	Hatch lock	KRS 40	special variant	for crusher mainframe	3114051
				KRS 40	special variant	for crusher mainframe	2337101
			Wear plate	KRS 40	special variant	for screen casing	2558166
				KRS 40	special variant	for screen casing	2647790
				KRS 40	special variant	for screen casing	2558173
			Wear plate	KRS 40	special variant	for crusher mainframe	2335070
			Wear plate	KRS 40	special variant	for crusher outlet	2786938
			Wear ring	KRS 40	special variant	for crusher countershaft	3113227
			Wear segment	KRS 40	special variant	for crusher cam	2740871
				KRS 40	special variant	for crusher mainframe	WX3300732
			Wear element	KRS 40	special variant	for crusher mainframe	3104315
						for crusher mainframe	
		2 - 9999	Wear plate	KRS 40	special variant	for crusher outlet	2786937
		15 - 9999	Wear plate	KRS 40	special variant	for ejector chute	2972359
				KRS 40	special variant	for ejector chute	2972292
				KRS 40	special variant	for ejector chute	2972467
MR 122i PRO	K031	1 - 9999	Wear plate	KRS HW	rectangular	for crusher housing	2521336
MR 130 PRO	K125	1 - 9999	Wear lining set	KRS 40	miscellaneous	for crusher housing	2966884
				KRS HW	miscellaneous	for crusher housing	2966885
				KRS 40	miscellaneous	for screen casing	2998866

WEAR PLATES

Series code	Serial code	Series range	Part	Version	Profile	Position	Part no.
MR 130 PRO	K125	1 - 9999	Wear lining set	KRS 60	miscellaneous	for crusher housing	WX3182093
				KRS 60	miscellaneous	for crusher housing / zone with limited accessibility	WX3182097
			Wear plate	KRS 40	special variant	for feed hopper	2998444
				KRS 40	special variant	for feed hopper	2998471
				KRS 40	rectangular	for vibrating feeder / base	F20010854
				KRS 40	rectangular	for vibrating feeder / rear wall	F20010855
				KRS 60	rectangular	for crusher housing	3061760
				KRS 60	square	for crusher housing	3061770
				KRS 40	triangular	for crusher housing	F20009535
				KRS 40	rectangular	for crusher housing	F20009534
				KRS 40	square	for crusher housing	F20009533
				KRS 50	triangular	for crusher housing	2462226
				KRS 50	rectangular	for crusher housing	2389216
				KRS HW	triangular	for crusher housing	2245882
				KRS 50	square	for crusher housing	2389211
				KRS HW	rectangular	for lower crusher housing	2798000
				KRS HW	rectangular	for lower crusher housing	2797999
				KRS 40	rectangular	for lower crusher housing	F20011161
				KRS 40	rectangular	for lower crusher housing	F20011162
				KRS 40	rectangular	for lower crusher housing	F20011160
				KRS HW	rectangular	for lower crusher housing	2797998
				KRS HW	square	for crusher housing	2234056
				KRS HW	rectangular	for crusher housing	2234057
				KRS 60	triangular	for crusher housing	WX3181833

ABRASION LINING

WEAR PLATES							
Series code	Serial code	Series range	Part	Version	Profile	Position	Part no.
MR 130 PRO	K124	1 - 9999	Wear lining set	KRS 60	miscellaneous	for crusher housing / zone with limited accessibility	WX3182097
				KRS 40	miscellaneous	for crusher housing	2966884
				KRS 60	miscellaneous	for crusher housing	WX3182093
				KRS HW	miscellaneous	for crusher housing	2966885
			Wear plate	KRS 60	triangular	for crusher housing	WX3181833
				KRS HW	rectangular	for lower crusher housing	2798000
				KRS HW	rectangular	for lower crusher housing	2797999
				KRS 40	rectangular	for lower crusher housing	F20011161
				KRS 40	rectangular	for lower crusher housing	F20011162
				KRS 40	rectangular	for lower crusher housing	F20011160
				KRS HW	square	for crusher housing	2234056
				KRS HW	rectangular	for crusher housing	2234057
				KRS HW	triangular	for crusher housing	2245882
				KRS 50	square	for crusher housing	2389211
				KRS 50	rectangular	for crusher housing	2389216
				KRS 50	triangular	for crusher housing	2462226
				KRS 40	square	for crusher housing	F20009533
				KRS 40	rectangular	for crusher housing	F20009534
				KRS 40	triangular	for crusher housing	F20009535
				KRS 60	square	for crusher housing	3061770
				KRS 60	rectangular	for crusher housing	3061760
		1 - 99999	Wear lining set	KRS 40	miscellaneous	for screen casing	2998866
MC 110 EVO	K117	1 - 9999	Wear lining set	KRS 40	miscellaneous	for feed hopper	2998570
			Wear plate	KRS 40	rectangular	for deflector plate	2820877

WEAR PLATES

Series code	Serial code	Series range	Part	Version	Profile	Position	Part no.
MC 110 EVO	K117	1 - 9999	Wear plate	KRS 40	rectangular	for vibrating feeder / rear wall	2656628
				KRS 40	rectangular	for deflector plate	F20009534
				KRS 40	rectangular	for vibrating feeder / left	2656629
				KRS 40	rectangular	for vibrating feeder / left	2656634
				KRS 40	rectangular	for vibrating feeder / right	2656632
				KRS 60	square	for deflector plate	3061770
				KRS 40	rectangular	for vibrating feeder / base	2656626
				KRS 40	rectangular	for vibrating feeder / base	2656627
				KRS 40	square	for deflector plate	F20009533
				KRS 40	rectangular	for deflector plate	2820851
			Wear plate	KRS 40	special variant	for crusher out-let	2294387
				KRS 40	special variant	for crusher out-let	2294380
MR 100 NEO	K136		Wear plate	KRS 50	triangular	for crusher housing	2462226
				KRS 50	rectangular	for crusher housing	2389216
				KRS HW	square	for crusher housing	2234056
				KRS 60	triangular	for crusher housing	WX3181833
				KRS 60	square	for crusher housing	3061770
		1 - 9999	Wear plate	KRS 40	triangular	for crusher housing	F20009535
				KRS 60	rectangular	for crusher housing	3061760
			Wear plate	KRS 40	square	for crusher housing	F20009533
				KRS 40	rectangular	for crusher housing	F20009534
		1 - 9999	Wear plate	KRS 40	special variant	for crusher housing	WX3050057
				KRS HW	triangular	for crusher housing	2245882
				KRS HW	rectangular	for crusher housing	2234057
				KRS 40	special variant	for crusher housing	WX3050091

WEAR PLATES							
Series code	Serial code	Series range	Part	Version	Profile	Position	Part no.
MR 100 NEO	K136	1 - 9999	Wear plate	KRS 40	special variant	for crusher housing	WX3050052
				KRS 50	square	for crusher housing	2389211
				KRS 40	special variant	for crusher housing	3017161
MR 100 NEOe	K138	1 - 9999	Wear plate	KRS HW	triangular	for crusher housing	2245882
				KRS HW	rectangular	for crusher housing	2234057
				KRS 40	special variant	for crusher housing	WX3050091
			Wear plate	KRS 60	rectangular	for crusher housing	3061760
		1 - 9999	Wear plate	KRS 40	special variant	for crusher housing	WX3050057
			Wear plate	KRS 40	special variant	for crusher housing	3152115
		1 - 9999	Wear plate	KRS 40	special variant	for crusher housing	WX3050052
MR 100 NEO	K135	1 - 9999	Wear plate	KRS HW	triangular	for crusher housing	2245882
				KRS HW	rectangular	for crusher housing	2234057
				KRS 40	special variant	for crusher housing	WX3050091
				KRS 40	special variant	for crusher housing	WX3050057
				KRS 40	special variant	for crusher housing	WX3050052
MR 100 NEOe	K137	1 - 9999	Wear plate	KRS 40	special variant	for crusher housing	WX3050057
				KRS HW	triangular	for crusher housing	2245882
				KRS 40	special variant	for crusher housing	WX3050052
				KRS 40	special variant	for crusher housing	WX3050091
				KRS HW	rectangular	for crusher housing	2234057
MSC 702 EVO	K148, K149	10 - 9999	Wear plate	KRS 40	special variant	for feeding conveyor	2573582
				KRS 40	special variant	for screen casing	2466096
				KRS 40	special variant	for feeding conveyor	2573584
MSC 703 EVO	K150, K151	10 - 9999	Wear plate	KRS 40	special variant	for feeding conveyor	2573582
				KRS 40	special variant	for screen casing	2466096
				KRS 40	special variant	for feeding conveyor	2573584

WEAR PLATES							
Series code	Serial code	Series range	Part	Version	Profile	Position	Part no.
MSC 952 EVO	K152	10 - 9999	Wear plate	KRS 40	special variant	for feeding conveyor	2573582
				KRS 40	special variant	for feeding conveyor	2573584
	K153	10 - 9999	Wear plate	KRS 40	special variant	for feeding conveyor	2573584
				KRS 40	special variant	for feeding conveyor	2573582
MSC 953 EVO	K154, K155	10 - 9999	Wear plate	KRS 40	special variant	for feeding conveyor	2573584
				KRS 40	special variant	for feeding conveyor	2573582

Original KLEEMANN

CRUSHER OVERLOAD PROTECTION

KLEEMANN pressure plates are used as crusher overload protection to prevent damage to the crushing chamber.

An overload can be caused by unbreakable materials such as pieces of steel. The pressure plate is designed to break at a specified pressure due to its material properties. This opens up the crushing chamber, removing the load from the crusher and thus protecting it from damage. Thanks to their special shape and the fact that they are made of special steel, genuine KLEEMANN pressure plates are specially designed for the forces exerted in the crusher.

> Read more online

PRESSURE PLATES

Pressure plates from KLEEMANN are used to protect the crusher from materials that cannot be processed, e.g. pieces of steel.

PRESSURE PLATES				
Series code	Serial code	Series range	Pressure resistance	Part no.
MC 100 R	K001	1 - 9999		F10351413
MC 100 EVO	K002, K011	1 - 9999		2542240

PRESSURE PLATES

Series code	Serial code	Series range	Pressure resistance	Part no.
MC 110 R EVO	K005	1 - 9999		2426262
MC 110 Ri EVO	K014	1 - 9999		2426262
MC 110 Z	K004	1 - 9999		F10377373
MC 110 Z EVO	K006	1 - 9999		2426262
MC 110 R	K003	1 - 9999		F10377373
MC 110 Zi EVO	K015	1 - 9999		2426262
MC 120 PRO	K034, K035	1 - 9999		2558961
MC 125 PRO	K008	1 - 9999		F10264034
MR 110 R EVO	K016	1 - 9999	300 bar	3138175
			350 bar	3138209
MR 110 Z EVO	K017		300 bar	3138175
			350 bar	3138209
MR 110 EVO	K018		300 bar	3138175
			350 bar	3138209
	K019		350 bar	3138209
			300 bar	3138175
MR 130 R EVO	K023	200 - 9999	300 bar	3138175
		301 - 9999	350 bar	3138209
MR 130 Z EVO	K024	200 - 9999	300 bar	3138175
		301 - 9999	350 bar	3138209
MR 130 EVO	K077		350 bar	3138209
			300 bar	3138175
	K078		300 bar	3138175
			350 bar	3138209
MC 110 EVO	K116	1 - 9999		2426262
MR 130 PRO	K125, K124		300 bar	3138175

Original KLEEMANN

CRUSHER OVERLOAD PROTECTION

PRESSURE PLATES				
Series code	Serial code	Series range	Pressure resistance	Part no.
MR 130 PRO	K125, K124		350 bar	3138209
MC 110 EVO	K117	1 - 9999		2426262
MR 100 NEO	K136	1 - 9999	300 bar	3138175
MR 100 NEOe	K138	1 - 9999	300 bar	3138175

CRUSHER DRIVE

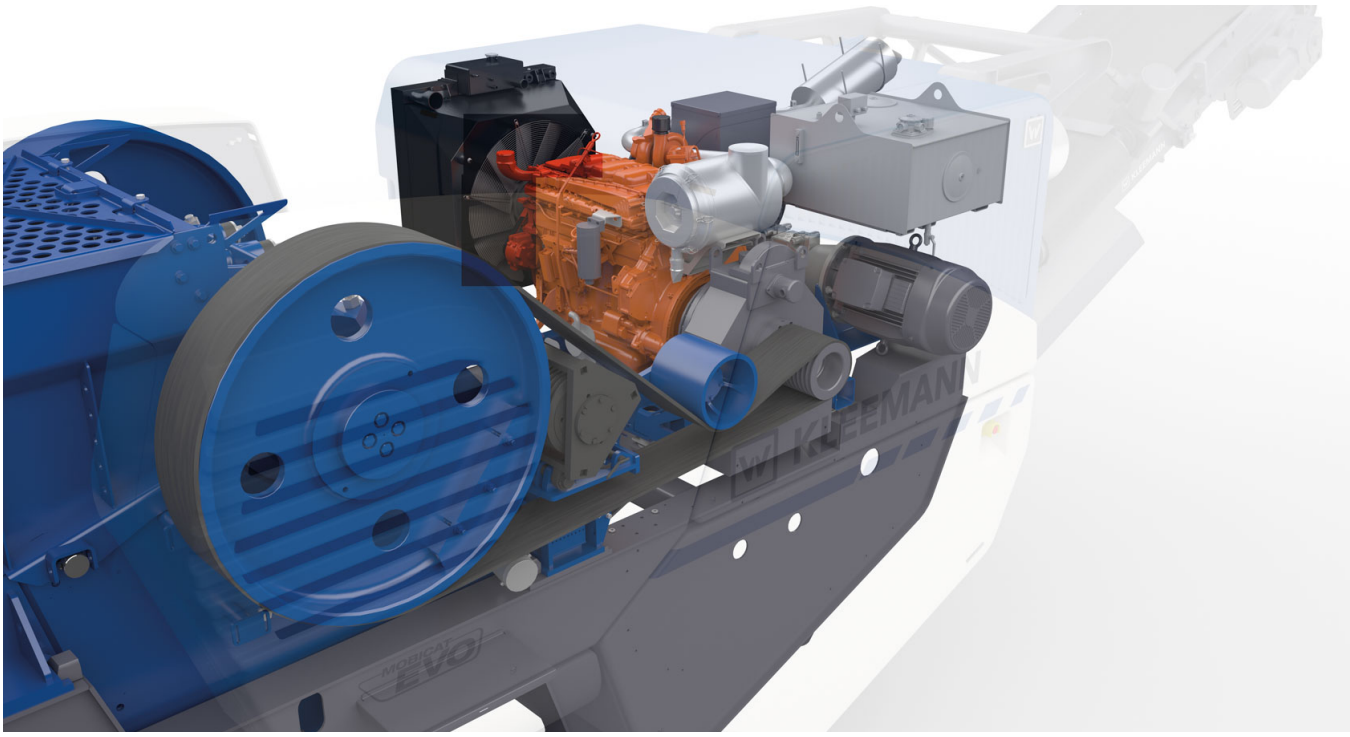

The high-performance, narrow V-belts for crusher drives are specially designed for large and heavy-duty drives. The low-stretch material features high tensile strength and also boasts extremely high abrasion and wear resistance. Unlike common V-belts, the heavy-duty V-belts come in a tapered shape that creates a raised profile. This ensures that it also meets the high demands of the crusher drive and runs smoothly.

> Read more online

V-BELT

The high-performance V-belts from KLEEMANN for the crusher drive are specially designed for large and heavily loaded drives.

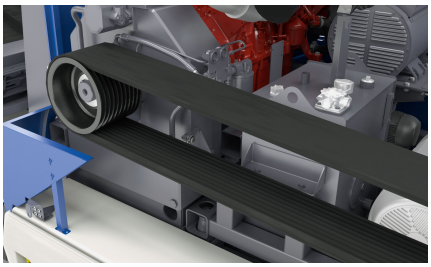

V-BELT					
Series code	Serial code	Series range	Package content	Requirement	Part no.
MC 100 R	K001	223 - 9999		1 pc.	M10021829
MC 100 EVO	K011	1 - 9999		8 pc.	2337123
MC 110 R EVO	K005	1 - 9999		10 pc.	2290313

CRUSHER DRIVE

V-BELT					
Series code	Serial code	Series range	Package content	Requirement	Part no.
MC 110 Ri EVO	K014	1 - 9999		10 pc.	2290313
MC 110 Z EVO	K006	1 - 9999		10 pc.	2290313
MC 110 Zi EVO	K015	1 - 9999		10 pc.	2290313
MC 120 Z	K007	1 - 9999		10 pc.	M10002720
MC 120 PRO	K034	1 - 9999		1 pc.	2617492
				1 pc.	2811817
	K035	1 - 9999		1 pc.	2811817
				1 pc.	2617492
MC 125 PRO	K008	1 - 9999		10 pc.	M00211050
MCO 9 EVO	K072	1 - 9999		1 pc.	2662079
MCO 9i EVO	K073	1 - 9999		1 pc.	2662079
MCO 9S EVO	K074	1 - 9999		1 pc.	2710883
MCO 9Si EVO	K075	1 - 9999		1 pc.	2710883
MCO 110 PRO	K110	4 - 9999		1 pc.	2478025
	K111	1 - 9999		1 pc.	2478025
MR 100 R	K012	1 - 9999		6 set	M10015185
MR 100 Z	K013	1 - 9999		6 pc.	M10015185
MR 110 R EVO	K016	1 - 9999		1 pc.	M10025610
				8 pc.	2227289
MR 110 Z EVO	K017	1 - 9999		8 pc.	2227289
		3 - 9999		1 pc.	M10025610
MR 110 EVO	K018, K019	1 - 9999	8 pc.	1 set	2404710
MR 122 PRO	K062	1 - 9999		10 pc.	M10001690
MR 130 R EVO	K023	201 - 9999		10 pc.	M00211041
MR 130 Z EVO	K024	70 - 299		10 pc.	M00211032
		301 - 9999		10 pc.	M00211041

V-BELT					
Series code	Serial code	Series range	Package content	Requirement	Part no.
MR 130 EVO	K077, K078	1 - 9999	10 pc.	1 set	2404713
MC 110 EVO	K116			10 set	2290313
MCO 90 EVO	K120, K121	1 - 9999		1 pc.	2875484
MR 122i PRO	K031	1 - 9999		10 set	M10001690
MR 130 PRO	K125, K124	1 - 9999		10 pc.	2874997
MC 110 EVO	K117	1 - 9999		10 set	2290313
MR 100 NEO	K136	1 - 9999		5 pc.	3054848
MR 100 NEOe	K138	1 - 9999		5 pc.	3054848

Original KLEEMANN

CONVEYOR UNIT

Among other factors, a plant's crushing capacity is also determined by the conveying capacity of the individual KLEEMANN conveying systems.

For many years, KLEEMANN has relied on three- or multi-layer conveyor belts that can handle whatever demands are placed on them in quarries and gravel pits. In order for the conveyor belt to be operated on the conveyor, the two ends must be spliced so that it forms an endless loop.

> Read more online

CONVEYOR BELTS

KLEEMANN offers both endless spliced conveyor belts as well as ZIP CLIP conveyor belts, which enable quick and easy replacement without external service providers and minimise waiting times for hardening. ZIP CLIP spare pins can be ordered individually.

CONVEYOR BELTS								
Series code	Serial code	Series range	Version	Variant	Conveyor belt type	Belt conveyor	Conveyor length	Part no.
MC 100 R	K001	35 - 9999	Zip Clip	Standard	Smooth	Prescreen conveyor, short, rigid	9 m	2902874
			Zip Clip	Standard	Smooth	Crusher discharge conveyor, standard	21.3 m	2902865
			Zip Clip	Standard	Smooth	Crusher discharge conveyor, folding, extended	23.2 m	2902866
			Endless	Standard	Cleated belt	Electromagnetic separator	5.1 m	M10023314
			Endless	Standard	Cleated belt	Permanent magnet separator	4.7 m	M10019176
			Zip Clip	Standard	Cleated belt	Permanent magnet separator	4.7 m	2915584
			Endless	Standard	Smooth	Prescreen conveyor, short, rigid	9 m	F20017275
			Endless	Standard	Smooth	Crusher discharge conveyor, standard	21.3 m	F20018220
			Endless	Standard	Smooth	Crusher discharge conveyor, folding, extended	23.2 m	F20018394

Original KLEEMANN

CONVEYOR UNIT

CONVEYOR BELTS								
Series code	Serial code	Series range	Version	Variant	Conveyor belt type	Belt conveyor	Conveyor length	Part no.
MC 100 R	K001	35 - 9999	Zip Clip	Standard	Cleated belt	Electromagnetic separator	5.1 m	2915582
MC 100 EVO	K002	1 - 61	Endless	Standard	Smooth	Crusher discharge conveyor, folding, extended	21.4 m	2527277
			Endless	Standard	Smooth	Crusher discharge conveyor, standard	18.3 m	2527273
			Zip Clip	Standard	Smooth	Crusher discharge conveyor, standard	18.3 m	2850225
			Zip Clip	Standard	Smooth	Crusher discharge conveyor, folding, extended	21.4 m	2902869
		1 - 9999	Zip Clip reinforced	Heavy duty	Cleated belt	Electromagnetic separator	4.5 m	2915543
			Zip Clip	Standard	Cleated belt	Electromagnetic separator	4.5 m	2915578
			Zip Clip	Standard	Cleated belt	Permanent magnet separator	4.7 m	2915584
			Endless	Standard	Cleated belt	Electromagnetic separator	4.5 m	2323184
			Endless	Standard	Smooth	Pre-screen conveyor, folding, left / right	10.7 m	2262332
			Endless	Standard	Smooth	Pre-screen conveyor, short, rigid, left / right	6.1 m	2226095
			Zip Clip	Standard	Smooth	Pre-screen conveyor, short, rigid, left / right	6.1 m	2902875

CONVEYOR BELTS

Series code	Serial code	Series range	Version	Variant	Conveyor belt type	Belt conveyor	Conveyor length	Part no.
MC 100 EVO	K002	1 - 9999	Zip Clip	Standard	Smooth	Pre-screen conveyor, folding, left / right	10.7 m	2902876
			Endless	Standard	Cleated belt	Permanent magnet separator	4.7 m	M10019176
		62 - 9999	Zip Clip	Standard	Smooth	Crusher discharge conveyor, folding, extended	21.3 m	2863348
			Endless	Standard	Smooth	Crusher discharge conveyor, standard	18.3 m	2551871
			Zip Clip	Standard	Smooth	Crusher discharge conveyor, standard	18.3 m	2850226
			Endless	Standard	Smooth	Crusher discharge conveyor, folding, extended	21.3 m	2552957
	K011	1 - 10	Endless	Standard	Smooth	Crusher discharge conveyor, standard	18.3 m	2527273
			Zip Clip	Standard	Smooth	Crusher discharge conveyor, standard	18.3 m	2850225
			Zip Clip	Standard	Smooth	Crusher discharge conveyor, folding, extended	21.4 m	2902869
			Endless	Standard	Smooth	Crusher discharge conveyor, folding, extended	21.4 m	2527277
		1 - 9999	Endless	Standard	Cleated belt	Electromagnetic separator	4.5 m	2323184

Original KLEEMANN

CONVEYOR UNIT

CONVEYOR BELTS								
Series code	Serial code	Series range	Version	Variant	Conveyor belt type	Belt conveyor	Conveyor length	Part no.
MC 100 EVO	K011	1 - 9999	Endless	Standard	Smooth	Pre-screen conveyor, folding, left / right	10.7 m	2262332
			Endless	Standard	Smooth	Pre-screen conveyor, short, rigid, left / right	6.1 m	2226095
			Endless	Standard	Cleated belt	Permanent magnet separator	4.7 m	M10019176
			Zip Clip reinforced	Heavy duty	Cleated belt	Electromagnetic separator	4.5 m	2915543
			Zip Clip	Standard	Cleated belt	Electromagnetic separator	4.5 m	2915578
			Zip Clip	Standard	Cleated belt	Permanent magnet separator	4.7 m	2915584
			Zip Clip	Standard	Smooth	Pre-screen conveyor, short, rigid, left / right	6.1 m	2902875
			Zip Clip	Standard	Smooth	Pre-screen conveyor, folding, left / right	10.7 m	2902876
		11 - 9999	Zip Clip	Standard	Smooth	Crusher discharge conveyor, folding, extended	21.3 m	2863348
			Endless	Standard	Smooth	Crusher discharge conveyor, standard	18.3 m	2551871
			Zip Clip	Standard	Smooth	Crusher discharge conveyor, standard	18.3 m	2850226
			Endless	Standard	Smooth	Crusher discharge conveyor, folding, extended	21.3 m	2552957

CONVEYOR BELTS

Series code	Serial code	Series range	Version	Variant	Conveyor belt type	Belt conveyor	Conveyor length	Part no.
MC 110 R EVO	K005	1 - 9999	Endless	Standard	Smooth	Crusher discharge conveyor, standard	19.4 m	2343610
			Endless	Standard	Cleated belt	Electromagnetic separator	4.5 m	2323184
			Zip Clip reinforced	Heavy duty	Cleated belt	Electromagnetic separator	4.5 m	2915543
			Zip Clip	Standard	Cleated belt	Electromagnetic separator	4.5 m	2915578
			Zip Clip	Standard	Cleated belt	Permanent magnet separator	4.7 m	2915584
			Zip Clip	Standard	Smooth	Crusher discharge conveyor, standard	19.4 m	2850229
			Zip Clip	Standard	Smooth	Pre-screen conveyor, short, rigid, left / right	6.1 m	2902875
			Zip Clip	Standard	Smooth	Pre-screen conveyor, folding, left / right	10.7 m	2902876
			Endless	Standard	Smooth	Crusher discharge conveyor, folding, extended	22.4 m	2343611
			Zip Clip	Standard	Smooth	Crusher discharge conveyor, folding, extended	22.4 m	2853280
			Endless	Standard	Cleated belt	Permanent magnet separator	4.7 m	M10019176
			Endless	Standard	Smooth	Pre-screen conveyor, short, rigid, left / right	6.1 m	2226095

Original KLEEMANN

CONVEYOR UNIT

CONVEYOR BELTS								
Series code	Serial code	Series range	Version	Variant	Conveyor belt type	Belt conveyor	Conveyor length	Part no.
MC 110 R EVO	K005	1 - 9999	Endless	Standard	Smooth	Pre-screen conveyor, folding, left / right	10.7 m	2262332
MC 110 Ri EVO	K014	1 - 9999	Endless	Standard	Smooth	Crusher discharge conveyor, standard	19.4 m	2343610
			Endless	Standard	Cleated belt	Electromagnetic separator	4.5 m	2323184
			Zip Clip reinforced	Heavy duty	Cleated belt	Electromagnetic separator	4.5 m	2915543
			Zip Clip	Standard	Cleated belt	Electromagnetic separator	4.5 m	2915578
			Zip Clip	Standard	Cleated belt	Permanent magnet separator	4.7 m	2915584
			Zip Clip	Standard	Smooth	Crusher discharge conveyor, standard	19.4 m	2850229
			Zip Clip	Standard	Smooth	Pre-screen conveyor, short, rigid, left / right	6.1 m	2902875
			Zip Clip	Standard	Smooth	Pre-screen conveyor, folding, left / right	10.7 m	2902876
			Zip Clip	Standard	Smooth	Crusher discharge conveyor, folding, extended	22.4 m	2853280
			Endless	Standard	Smooth	Crusher discharge conveyor, folding, extended	22.4 m	2343611
			Endless	Standard	Cleated belt	Permanent magnet separator	4.7 m	M10019176

CONVEYOR BELTS

Series code	Serial code	Series range	Version	Variant	Conveyor belt type	Belt conveyor	Conveyor length	Part no.
MC 110 Ri EVO	K014	1 - 9999	Endless	Standard	Smooth	Pre-screen conveyor, short, rigid, left / right	6.1 m	2226095
			Endless	Standard	Smooth	Pre-screen conveyor, folding, left / right	10.7 m	2262332
MC 110 Z	K004	200 - 9999	Endless	Standard	Cleated belt	Oversize grain conveyor	12.9 m	F20009761
			Zip Clip	Standard	Cleated belt	Permanent magnet separator	4.7 m	2915584
			Zip Clip	Standard	Cleated belt	Electromagnetic separator	5.7 m	2915592
			Zip Clip	Standard	Smooth	Crusher discharge conveyor, standard	20.4 m	2850227
			Zip Clip	Standard	Smooth	Prescreen conveyor, short, rigid	8.9 m	2902871
			Zip Clip	Standard	Smooth	Crusher discharge conveyor, folding, extended	22 m	2902872
			Zip Clip	Standard	Smooth	Fine grain conveyor	11.6 m	2902880
			Zip Clip	Standard	Cleated belt	Oversize grain conveyor	12.9 m	2902881
			Zip Clip	Standard	Smooth	Prescreen conveyor, long, rigid	12.9 m	2849100
			Endless	Standard	Cleated belt	Electromagnetic separator	5.7 m	2540777
			Endless	Standard	Cleated belt	Permanent magnet separator	4.7 m	M10019176

Original KLEEMANN

CONVEYOR UNIT

CONVEYOR BELTS								
Series code	Serial code	Series range	Version	Variant	Conveyor belt type	Belt conveyor	Conveyor length	Part no.
MC 110 Z	K004	200 - 9999	Endless	Standard	Smooth	Prescreen conveyor, long, rigid	12.9 m	F20009762
			Endless	Standard	Smooth	Prescreen conveyor, short, rigid	8.9 m	F20011025
			Endless	Standard	Smooth	Crusher discharge conveyor, standard	20.4 m	F20016923
			Endless	Standard	Smooth	Fine grain conveyor	11.6 m	F20017395
			Endless	Standard	Smooth	Crusher discharge conveyor, folding, extended	22 m	F20017438
MC 110 Z EVO	K006	1 - 9999	Endless	Standard	Smooth	Crusher discharge conveyor, standard	19.4 m	2343610
			Endless	Standard	Cleated belt	Electromagnetic separator	4.5 m	2323184
			Zip Clip reinforced	Heavy duty	Cleated belt	Electromagnetic separator	4.5 m	2915543
			Zip Clip	Standard	Cleated belt	Electromagnetic separator	4.5 m	2915578
			Zip Clip	Standard	Cleated belt	Permanent magnet separator	4.7 m	2915584
			Zip Clip	Standard	Smooth	Crusher discharge conveyor, standard	19.4 m	2850229
			Zip Clip	Standard	Smooth	Pre-screen conveyor, short, rigid, left / right	6.1 m	2902875
			Zip Clip	Standard	Smooth	Pre-screen conveyor, folding, left / right	10.7 m	2902876

CONVEYOR BELTS

Series code	Serial code	Series range	Version	Variant	Conveyor belt type	Belt conveyor	Conveyor length	Part no.
MC 110 Z EVO	K006	1 - 9999	Zip Clip	Standard	Smooth	Crusher discharge conveyor, folding, extended	22.4 m	2853280
			Endless	Standard	Smooth	Crusher discharge conveyor, folding, extended	22.4 m	2343611
			Endless	Standard	Cleated belt	Permanent magnet separator	4.7 m	M10019176
			Endless	Standard	Smooth	Pre-screen conveyor, short, rigid, left / right	6.1 m	2226095
			Endless	Standard	Smooth	Pre-screen conveyor, folding, left / right	10.7 m	2262332
MC 110 R	K003	200 - 9999	Zip Clip	Standard	Smooth	Fine grain conveyor	11.6 m	2902880
			Zip Clip	Standard	Cleated belt	Permanent magnet separator	4.7 m	2915584
			Zip Clip	Standard	Cleated belt	Electromagnetic separator	5.7 m	2915592
			Zip Clip	Standard	Smooth	Crusher discharge conveyor, standard	20.4 m	2850227
			Zip Clip	Standard	Smooth	Prescreen conveyor, short, rigid	8.9 m	2902871
			Zip Clip	Standard	Smooth	Crusher discharge conveyor, folding, extended	22 m	2902872
			Zip Clip	Standard	Smooth	Prescreen conveyor, long, rigid	12.9 m	2849100

Original KLEEMANN

CONVEYOR UNIT

CONVEYOR BELTS								
Series code	Serial code	Series range	Version	Variant	Conveyor belt type	Belt conveyor	Conveyor length	Part no.
MC 110 R	K003	200 - 9999	Endless	Standard	Cleated belt	Electromagnetic separator	5.7 m	2540777
			Endless	Standard	Cleated belt	Permanent magnet separator	4.7 m	M10019176
			Endless	Standard	Smooth	Prescreen conveyor, long, rigid	12.9 m	F20009762
			Endless	Standard	Smooth	Prescreen conveyor, short, rigid	8.9 m	F20011025
			Endless	Standard	Smooth	Crusher discharge conveyor, standard	20.4 m	F20016923
			Endless	Standard	Smooth	Fine grain conveyor	11.6 m	F20017395
			Endless	Standard	Smooth	Crusher discharge conveyor, folding, extended	22 m	F20017438
			Endless	Standard	Cleated belt	Oversize grain conveyor	12.9 m	F20009761
			Zip Clip	Standard	Cleated belt	Oversize grain conveyor	12.9 m	2902881
MC 110 Zi EVO	K015	1 - 9999	Endless	Standard	Smooth	Crusher discharge conveyor, standard	19.4 m	2343610
			Endless	Standard	Cleated belt	Electromagnetic separator	4.5 m	2323184
			Zip Clip reinforced	Heavy duty	Cleated belt	Electromagnetic separator	4.5 m	2915543
			Zip Clip	Standard	Cleated belt	Electromagnetic separator	4.5 m	2915578

CONVEYOR BELTS

Series code	Serial code	Series range	Version	Variant	Conveyor belt type	Belt conveyor	Conveyor length	Part no.
MC 110 Zi EVO	K015	1 - 9999	Zip Clip	Standard	Cleated belt	Permanent magnet separator	4.7 m	2915584
			Zip Clip	Standard	Smooth	Crusher discharge conveyor, standard	19.4 m	2850229
			Zip Clip	Standard	Smooth	Pre-screen conveyor, short, rigid, left / right	6.1 m	2902875
			Zip Clip	Standard	Smooth	Pre-screen conveyor, folding, left / right	10.7 m	2902876
			Zip Clip	Standard	Smooth	Crusher discharge conveyor, folding, extended	22.4 m	2853280
			Endless	Standard	Smooth	Crusher discharge conveyor, folding, extended	22.4 m	2343611
			Endless	Standard	Cleated belt	Permanent magnet separator	4.7 m	M10019176
			Endless	Standard	Smooth	Pre-screen conveyor, short, rigid, left / right	6.1 m	2226095
			Endless	Standard	Smooth	Pre-screen conveyor, folding, left / right	10.7 m	2262332
MC 120 Z	K007	53 - 211	Zip Clip	Standard	Smooth	Prescreen conveyor, long, rigid	12.9 m	2902873
		53 - 211	Endless	Standard	Smooth	Prescreen conveyor, long, rigid	13 m	F20015453

Original KLEEMANN

CONVEYOR UNIT

CONVEYOR BELTS								
Series code	Serial code	Series range	Version	Variant	Conveyor belt type	Belt conveyor	Conveyor length	Part no.
MC 120 Z	K007	53 - 211	Zip Clip	Standard	Smooth	Crusher discharge conveyor, folding, extended	24 m	2906256
			Endless	Standard	Cleated belt	Permanent magnet separator	4.7 m	2452708
			Zip Clip	Standard	Cleated belt	Electromagnetic separator	5.9 m	2915595
			Zip Clip	Standard	Smooth	Crusher discharge conveyor, standard	21 m	2850180
			Endless	Standard	Cleated belt	Electromagnetic separator	5.9 m	2203936
			Zip Clip	Standard	Cleated belt / reinforced	Permanent magnet separator	4.6 m	WX3174814
			Endless	Standard	Smooth	Crusher discharge conveyor, standard	21 m	F20014924
			Endless	Standard	Smooth	Crusher discharge conveyor, folding, extended	24 m	F20018504
			Endless	Standard	Smooth	Prescreen conveyor, long, rigid	12.9 m	F20009762
		212 - 9999	Zip Clip	Standard	Smooth	Prescreen conveyor, long, rigid	12.9 m	2849100
MC 120 PRO	K034	1 - 91	Endless	Standard	Cleated belt	Permanent magnet separator	5.3 m	2701888
			Zip Clip reinforced	Heavy duty	Cleated belt	Permanent magnet separator	5.3 m	2915601

CONVEYOR BELTS

Series code	Serial code	Series range	Version	Variant	Conveyor belt type	Belt conveyor	Conveyor length	Part no.
MC 120 PRO	K034	1 - 91	Zip Clip	Standard	Smooth	Pre-screen conveyor, long, rigid, left / right	14.1 m	2863266
			Endless	Standard	Smooth	Crusher discharge conveyor, 13.9 m without grooves	28.7 m	2538354
			Endless	Standard	Smooth	Crusher discharge conveyor, 12.3 m with grooves	25.3 m	2617389
			Zip Clip	Standard	Cleated belt	Electromagnetic separator	5.1 m	2910184
			Zip Clip reinforced	Heavy duty	Cleated belt	Electromagnetic separator	5.1 m	2915598
			Zip Clip	Standard	Smooth	Crusher discharge conveyor, 12.3 m with grooves	25.3 m	2863215
			Zip Clip	Standard	Smooth	Crusher discharge conveyor, 10.6 m with grooves	22.2 m	2863253
			Endless	Standard	Cleated belt	Electromagnetic separator	5.1 m	2540481
			Zip Clip	Standard	Smooth	Crusher discharge conveyor, 13.9 m without grooves	28.7 m	2863268
			Zip Clip	Standard	Smooth	Crusher discharge conveyor, 12.3 m without grooves	25.5 m	2863270

Original KLEEMANN

CONVEYOR UNIT

CONVEYOR BELTS								
Series code	Serial code	Series range	Version	Variant	Conveyor belt type	Belt conveyor	Conveyor length	Part no.
MC 120 PRO	K034	1 - 91	Endless	Standard	Smooth	Crusher discharge conveyor, 10.6 m with grooves	22.2 m	2560616
			Endless	Standard	Smooth	Pre-screen conveyor, long, rigid, left / right	14.1 m	2582476
			Endless	Standard	Smooth	Crusher discharge conveyor, 12.3 m without grooves	25.5 m	2608905
		92 - 9999	Zip Clip	Standard	Cleated belt	Permanent magnet separator	5.3 m	2946342
			Endless	Standard	Cleated belt	Permanent magnet separator	5.1 m	3100575
			Zip Clip reinforced	Heavy duty	Cleated belt	Permanent magnet separator	5.3 m	2915601
	K035	1 - 38	Endless	Standard	Cleated belt	Permanent magnet separator	5.3 m	2701888
			Zip Clip reinforced	Heavy duty	Cleated belt	Permanent magnet separator	5.3 m	2915601
			Zip Clip	Standard	Smooth	Pre-screen conveyor, long, rigid, left / right	14.1 m	2863266
			Endless	Standard	Smooth	Crusher discharge conveyor, 12.3 m with grooves	25.3 m	2617389
			Endless	Standard	Smooth	Crusher discharge conveyor, 12.3 m without grooves	25.5 m	2608905

CONVEYOR BELTS

Series code	Serial code	Series range	Version	Variant	Conveyor belt type	Belt conveyor	Conveyor length	Part no.
MC 120 PRO	K035	1 - 38	Zip Clip	Standard	Cleated belt	Electromagnetic separator	5.1 m	2910184
			Zip Clip reinforced	Heavy duty	Cleated belt	Electromagnetic separator	5.1 m	2915598
			Zip Clip	Standard	Smooth	Crusher discharge conveyor, 12.3 m with grooves	25.3 m	2863215
			Zip Clip	Standard	Smooth	Crusher discharge conveyor, 10.6 m with grooves	22.2 m	2863253
			Zip Clip	Standard	Smooth	Crusher discharge conveyor, 13.9 m without grooves	28.7 m	2863268
			Zip Clip	Standard	Smooth	Crusher discharge conveyor, 12.3 m without grooves	25.5 m	2863270
			Endless	Standard	Smooth	Crusher discharge conveyor, 13.9 m without grooves	28.7 m	2538354
			Endless	Standard	Cleated belt	Electromagnetic separator	5.1 m	2540481
			Endless	Standard	Smooth	Crusher discharge conveyor, 10.6 m with grooves	22.2 m	2560616
			Endless	Standard	Smooth	Pre-screen conveyor, long, rigid, left / right	14.1 m	2582476

Original KLEEMANN

CONVEYOR UNIT

CONVEYOR BELTS								
Series code	Serial code	Series range	Version	Variant	Conveyor belt type	Belt conveyor	Conveyor length	Part no.
MC 120 PRO	K035	39 - 9999	Zip Clip reinforced	Heavy duty	Cleated belt	Permanent magnet separator	5.3 m	2915601
			Zip Clip	Standard	Cleated belt	Permanent magnet separator	5.3 m	2946342
			Endless	Standard	Cleated belt	Permanent magnet separator	5.1 m	3100575
MC 125 PRO	K008	219 - 9999	Zip Clip	Standard	Smooth	Fine grain conveyor	25.3 m	2884287
			Zip Clip	Standard	Cleated belt	Permanent magnet separator	5.3 m	2946342
			Zip Clip reinforced	Heavy duty	Cleated belt	Permanent magnet separator	5.3 m	2915601
			Zip Clip	Standard	Cleated belt	Electromagnetic separator	5.7 m	2915592
		219 - 9999	Endless	Standard	Cleated belt	Permanent magnet separator	5.3 m	2701888
			Endless	Standard	Smooth	Crusher discharge conveyor, folding, extended	25.3 m	F20019182
			Endless	Standard	Smooth	Crusher discharge conveyor, standard	20.9 m	2201415
			Endless	Standard	Cleated belt	Electromagnetic separator	5.7 m	2540777
			Endless	Standard	Smooth	Side discharge conveyor, left / right	17 m	F20019180
MCO 9 EVO	K072	1 - 9999	Zip Clip	Standard	Smooth	Prescreen conveyor, long, rigid	12.9 m	2849100

CONVEYOR BELTS

Series code	Serial code	Series range	Version	Variant	Conveyor belt type	Belt conveyor	Conveyor length	Part no.
MCO 9 EVO	K072	1 - 9999	Endless	Standard	Smooth	Feeding conveyor	13.6 m	2454068
			Zip Clip	Standard	Smooth	Crusher discharge conveyor, folding, extended	21.8 m	2863342
			Endless	Standard	Smooth	Prescreen conveyor, long, rigid	12.9 m	F20009762
			Endless	Standard	Smooth	Crusher discharge conveyor, standard	18.6 m	2307107
			Endless	Standard	Smooth	Crusher discharge conveyor, folding, extended	21.8 m	2336946
			Zip Clip	Standard	Smooth	Crusher discharge conveyor, standard	18.6 m	2863333
MCO 9i EVO	K073	1 - 9999	Zip Clip	Standard	Smooth	Prescreen conveyor, long, rigid	12.9 m	2849100
			Endless	Standard	Smooth	Feeding conveyor	13.6 m	2454068
			Zip Clip	Standard	Smooth	Crusher discharge conveyor, standard	18.6 m	2863333
			Endless	Standard	Smooth	Prescreen conveyor, long, rigid	12.9 m	F20009762
			Endless	Standard	Smooth	Crusher discharge conveyor, standard	18.6 m	2307107
			Endless	Standard	Smooth	Crusher discharge conveyor, folding, extended	21.8 m	2336946

Original KLEEMANN

CONVEYOR UNIT

CONVEYOR BELTS								
Series code	Serial code	Series range	Version	Variant	Conveyor belt type	Belt conveyor	Conveyor length	Part no.
MCO 9i EVO	K073	1 - 9999	Zip Clip	Standard	Smooth	Crusher discharge conveyor, folding, extended	21.8 m	2863342
MCO 9S EVO	K074	1 - 9999	Zip Clip	Standard	Cleated belt	Return conveyor	20.3 m	2850173
			Zip Clip	Standard	Smooth	Fine grain conveyor	14.5 m	2902935
			Endless	Standard	Smooth	Feeding conveyor	13.6 m	2454068
			Zip Clip	Standard	Smooth	Crusher discharge conveyor, standard	19.6 m	2863276
			Endless	Standard	Smooth	Transfer conveyor	3.8 m	F20014794
			Endless	Standard	Cleated belt	Return conveyor	20.3 m	2305085
			Endless	Standard	Smooth	Fine grain conveyor	14.5 m	2322377
			Endless	Standard	Smooth	Crusher discharge conveyor, standard	19.6 m	2339948
			Zip Clip	Standard	Smooth	Transfer conveyor	3.8 m	2849098
MCO 9Si EVO	K075	1 - 9999	Zip Clip	Standard	Cleated belt	Return conveyor	20.3 m	2850173
			Zip Clip	Standard	Smooth	Fine grain conveyor	14.5 m	2902935
			Endless	Standard	Smooth	Feeding conveyor	13.6 m	2454068
			Zip Clip	Standard	Smooth	Crusher discharge conveyor, standard	19.6 m	2863276
			Endless	Standard	Smooth	Transfer conveyor	3.8 m	F20014794
			Endless	Standard	Cleated belt	Return conveyor	20.3 m	2305085
			Endless	Standard	Smooth	Fine grain conveyor	14.5 m	2322377
			Endless	Standard	Smooth	Crusher discharge conveyor, standard	19.6 m	2339948
			Zip Clip	Standard	Smooth	Transfer conveyor	3.8 m	2849098

CONVEYOR BELTS

Series code	Serial code	Series range	Version	Variant	Conveyor belt type	Belt conveyor	Conveyor length	Part no.
MCO 110	K038	228 - 9999	Endless	Standard	Smooth	Crusher discharge conveyor, standard	21.1 m	2209031
			Zip Clip	Standard	Smooth	Prescreen conveyor, long, rigid	12.9 m	2849100
			Endless	Standard	Smooth	Prescreen conveyor, long, rigid	12.9 m	F20009762
			Endless	Standard	Smooth	Feeding conveyor	11.8 m	2253296
MCO 110 PRO	K110	1 - 5	Endless	Standard	Smooth	Crusher discharge conveyor, folding, extended	22.4 m	2343611
		1 - 5	Zip Clip	Standard	Smooth	Crusher discharge conveyor, folding, extended	22.4 m	2853280
			Zip Clip	Standard	Smooth	Crusher discharge conveyor, standard	19.4 m	2850229
			Endless	Standard	Smooth	Crusher discharge conveyor, standard	19.4 m	2343610
		1 - 9999	Zip Clip	Standard	Smooth	Oversize grain conveyor	16.9 m	2906267
			Endless	Standard	Smooth	Oversize grain conveyor	16.9 m	2445498
			Endless	Standard	Smooth	Feeding conveyor	15.9 m	2435251
		6 - 9999	Endless	Standard	Smooth	Crusher discharge conveyor, standard	19.3 m	2503871

Original KLEEMANN

CONVEYOR UNIT

CONVEYOR BELTS								
Series code	Serial code	Series range	Version	Variant	Conveyor belt type	Belt conveyor	Conveyor length	Part no.
MCO 110 PRO	K110	6 - 9999	Zip Clip	Standard	Smooth	Crusher discharge conveyor, folding, extended	22.4 m	2853280
			Endless	Standard	Smooth	Crusher discharge conveyor, folding, extended	22.4 m	2343611
			Zip Clip	Standard	Smooth	Crusher discharge conveyor, standard	20.9 m	2863288
	K111	1 - 2	Endless	Standard	Smooth	Crusher discharge conveyor, folding, extended	22.4 m	2343611
		1 - 2	Zip Clip	Standard	Smooth	Crusher discharge conveyor, standard	19.4 m	2850229
			Endless	Standard	Smooth	Crusher discharge conveyor, standard	19.4 m	2343610
		1 - 9999	Endless	Standard	Smooth	Oversize grain conveyor	16.9 m	2445498
			Endless	Standard	Smooth	Feeding conveyor	15.9 m	2435251
			Zip Clip	Standard	Smooth	Oversize grain conveyor	16.9 m	2906267
		3 - 9999	Endless	Standard	Smooth	Crusher discharge conveyor, standard	19.3 m	2503871
			Zip Clip	Standard	Smooth	Crusher discharge conveyor, folding, extended	22.4 m	2853280

CONVEYOR BELTS

Series code	Serial code	Series range	Version	Variant	Conveyor belt type	Belt conveyor	Conveyor length	Part no.
MCO 110 PRO	K111	3 - 9999	Zip Clip	Standard	Smooth	Crusher discharge conveyor, standard	20.9 m	2863288
			Endless	Standard	Smooth	Crusher discharge conveyor, folding, extended	22.4 m	2343611
MCO 130 PRO	K042	213 - 9999	Endless	Standard	Smooth	Feeding conveyor	15.1 m	2309009
			Endless	Standard	Smooth	Crusher discharge conveyor, standard	22 m	2309417
MCO 130 S PRO	K044	0 - 0	Endless	Standard	Smooth	Side discharge conveyor	17 m	2447924
			Endless	Standard	Smooth	Fine grain conveyor	21.3 m	2200870
			Endless	Standard	Cleated belt	Feeding conveyor	36.2 m	2199517
			Endless	Standard	Smooth	Crusher discharge conveyor, standard	18.6 m	2200600
MR 100 R	K012	33 - 9999	Endless	Standard	Smooth	Prescreen conveyor, short, rigid	9 m	M10006116
			Endless	Standard	Cleated belt	Return conveyor	18.3 m	M10010651
			Endless	Standard	Smooth	Crusher discharge conveyor, standard	17.2 m	M10006219
			Zip Clip	Standard	Smooth	Fine grain conveyor	18.3 m	2884287
			Endless	Standard	Smooth	Transfer conveyor	4.3 m	2221210
			Endless	Standard	Cleated belt	Permanent magnet separator	4.7 m	M10019176
			Endless	Standard	Cleated belt	Electromagnetic separator	5.1 m	M10023314

Original KLEEMANN

CONVEYOR UNIT

CONVEYOR BELTS								
Series code	Serial code	Series range	Version	Variant	Conveyor belt type	Belt conveyor	Conveyor length	Part no.
MR 100 R	K012	33 - 9999	Zip Clip	Standard	Cleated belt	Electromagnetic separator	5.1 m	2915582
			Zip Clip	Standard	Cleated belt	Permanent magnet separator	4.7 m	2915584
			Zip Clip	Standard	Smooth	Fine grain conveyor	11.6 m	2902880
			Endless	Standard	Smooth	Fine grain conveyor	11.6 m	F20017395
MR 100 Z	K013	1 - 9999	Endless	Standard	Smooth	Prescreen conveyor, long, rigid	12.9 m	M10002025
			Endless	Standard	Cleated belt	Return conveyor	18.3 m	M10010651
			Zip Clip	Standard	Smooth	Fine grain conveyor	17.2 m	2884287
			Endless	Standard	Smooth	Crusher discharge conveyor, standard	17.2 m	M10006219
			Endless	Standard	Smooth	Transfer conveyor	4.3 m	2221210
			Endless	Standard	Cleated belt	Permanent magnet separator	4.7 m	M10019176
			Endless	Standard	Cleated belt	Electromagnetic separator	5.1 m	M10023314
			Zip Clip	Standard	Cleated belt	Electromagnetic separator	5.1 m	2915582
			Zip Clip	Standard	Cleated belt	Permanent magnet separator	4.7 m	2915584
			Zip Clip	Standard	Smooth	Fine grain conveyor	11.6 m	2902880
			Endless	Standard	Smooth	Fine grain conveyor	11.6 m	F20017395
MR 110 R EVO	K016	1 - 9999	Endless	Standard	Cleated belt	Electromagnetic separator	5.7 m	2540777

CONVEYOR BELTS

Series code	Serial code	Series range	Version	Variant	Conveyor belt type	Belt conveyor	Conveyor length	Part no.
MR 110 R EVO	K016	1 - 9999	Zip Clip	Standard	Cleated belt	Permanent magnet separator	4.7 m	2915584
			Zip Clip	Standard	Cleated belt	Electromagnetic separator	5.7 m	2915592
			Zip Clip	Standard	Smooth	Fine grain conveyor	14.6 m	2902882
			Zip Clip	Standard	Smooth	Crusher discharge conveyor, standard	19.7 m	2849066
			Zip Clip	Standard	Smooth	Transfer conveyor	3.8 m	2849098
			Zip Clip	Standard	Smooth	Prescreen conveyor, long, rigid	12.9 m	2849100
			Zip Clip	Standard	Cleated belt	Return conveyor	17.8 m	2849102
			Endless	Standard	Smooth	Prescreen conveyor, long, rigid	12.9 m	F20009762
			Endless	Standard	Smooth	Prescreen conveyor, short, rigid	8.9 m	F20011025
			Endless	Standard	Smooth	Crusher discharge conveyor, standard	19.7 m	F20012192
			Endless	Standard	Smooth	Fine grain conveyor	14.6 m	F20012551
			Endless	Standard	Smooth	Transfer conveyor	3.8 m	F20014794
			Endless	Standard	Cleated belt	Permanent magnet separator	4.7 m	M10019176
			Endless	Standard	Cleated belt	Return conveyor	17.8 m	2223573
		3 - 9999	Zip Clip	Standard	Smooth	Prescreen conveyor, short, rigid	8.9 m	2902871
MR 110 Z EVO	K017	3 - 9999	Endless	Standard	Cleated belt	Electromagnetic separator	5.7 m	2540777

Original KLEEMANN

CONVEYOR UNIT

CONVEYOR BELTS								
Series code	Serial code	Series range	Version	Variant	Conveyor belt type	Belt conveyor	Conveyor length	Part no.
MR 110 Z EVO	K017	3 - 9999	Zip Clip	Standard	Cleated belt	Permanent magnet separator	4.7 m	2915584
			Zip Clip	Standard	Cleated belt	Electromagnetic separator	5.7 m	2915592
			Zip Clip	Standard	Smooth	Prescreen conveyor, short, rigid	8.9 m	2902871
			Zip Clip	Standard	Smooth	Fine grain conveyor	14.6 m	2902882
			Zip Clip	Standard	Smooth	Crusher discharge conveyor, standard	19.7 m	2849066
			Zip Clip	Standard	Smooth	Transfer conveyor	3.8 m	2849098
			Zip Clip	Standard	Smooth	Prescreen conveyor, long, rigid	12.9 m	2849100
			Zip Clip	Standard	Cleated belt	Return conveyor	17.8 m	2849102
			Endless	Standard	Smooth	Prescreen conveyor, long, rigid	12.9 m	F20009762
			Endless	Standard	Smooth	Prescreen conveyor, short, rigid	8.9 m	F20011025
			Endless	Standard	Smooth	Crusher discharge conveyor, standard	19.7 m	F20012192
			Endless	Standard	Smooth	Fine grain conveyor	14.6 m	F20012551
			Endless	Standard	Smooth	Transfer conveyor	3.8 m	F20014794
			Endless	Standard	Cleated belt	Permanent magnet separator	4.7 m	M10019176
			Endless	Standard	Cleated belt	Return conveyor	17.8 m	2223573
MR 110 EVO	K018	1 - 9999	Endless	Standard	Cleated belt	Return conveyor, Bb650 [9.1 m]	18.9 m	2624777

CONVEYOR BELTS

Series code	Serial code	Series range	Version	Variant	Conveyor belt type	Belt conveyor	Conveyor length	Part no.
MR 110 EVO	K018	1 - 9999	Endless	Standard	Cleated belt	Permanent magnet separator	5.3 m	2701888
			Zip Clip	Standard	Smooth	Medium grain conveyor	13.3 m	3123373
			Endless	Standard	Smooth	Medium grain conveyor	13.3 m	3084386
			Zip Clip	Standard	Smooth	Crusher discharge conveyor, folding, extended	20.9 m	WX3167192
			Zip Clip	Standard	Cleated belt	Return conveyor, 650 mm	18.9 m	3131993
			Endless	Standard	Cleated belt	Return conveyor	18.6 m	WX3043733
			Endless	Standard	Smooth	Fine grain conveyor	14.9 m	2874731
			Zip Clip	Standard	Smooth	Fine grain conveyor	14.9 m	2978505
			Endless	Standard	Smooth	Crusher discharge conveyor, folding, extended	20.9 m	WX3037899
			Zip Clip	Standard	Cleated belt	Electromagnetic separator	5.1 m	2910184
			Endless	Standard	Smooth	Pre-screen conveyor, folding, left / right	12.4 m	2596212
			Endless	Standard	Smooth	Crusher discharge conveyor, folding, extended	22.9 m	2383550
			Zip Clip	Standard	Cleated belt	Permanent magnet separator	5.3 m	2946342

Original KLEEMANN

CONVEYOR UNIT

CONVEYOR BELTS								
Series code	Serial code	Series range	Version	Variant	Conveyor belt type	Belt conveyor	Conveyor length	Part no.
MR 110 EVO	K018	1 - 9999	Zip Clip reinforced	Heavy duty	Cleated belt	Electromagnetic separator	5.1 m	2915598
			Zip Clip reinforced	Heavy duty	Cleated belt	Permanent magnet separator	5.3 m	2915601
			Zip Clip	Standard	Smooth	Prescreen conveyor, short, rigid	8.9 m	2902871
			Zip Clip	Standard	Smooth	Crusher discharge conveyor, folding, extended	22.9 m	2902932
			Zip Clip	Standard	Smooth	Fine grain conveyor	14.5 m	2902935
			Zip Clip	Standard	Smooth	Transfer conveyor	3.8 m	2849098
			Zip Clip	Standard	Smooth	Prescreen conveyor, long, rigid	12.9 m	2849100
			Zip Clip	Standard	Smooth	Crusher discharge conveyor, standard	19.6 m	2849104
			Zip Clip	Standard	Cleated belt	Return conveyor, 500 mm	18.8 m	2849127
			Zip Clip	Standard	Smooth	Pre-screen conveyor, folding, left / right	12.4 m	2863250
			Endless	Standard	Cleated belt	Return conveyor, 500 mm	18.8 m	2336219
			Endless	Standard	Smooth	Crusher discharge conveyor, standard	19.6 m	2358281
			Endless	Standard	Cleated belt	Electromagnetic separator	5.1 m	2540481

CONVEYOR BELTS

Series code	Serial code	Series range	Version	Variant	Conveyor belt type	Belt conveyor	Conveyor length	Part no.
MR 110 EVO	K018	1 - 9999	Endless	Standard	Smooth	Prescreen conveyor, long, rigid	12.9 m	F20009762
			Endless	Standard	Smooth	Prescreen conveyor, short, rigid	8.9 m	F20011025
			Endless	Standard	Smooth	Transfer conveyor	3.8 m	F20014794
			Endless	Standard	Smooth	Fine grain conveyor	14.5 m	2322377
			Zip Clip	Standard	Cleated belt	Return conveyor	18.6 m	3123376
	K019	1 - 9999	Endless	Standard	Cleated belt	Return conveyor	18.6 m	WX3043733
			Endless	Standard	Cleated belt	Permanent magnet separator	5.3 m	2701888
			Zip Clip	Standard	Smooth	Medium grain conveyor	13.3 m	3123373
			Endless	Standard	Smooth	Medium grain conveyor	13.3 m	3084386
			Endless	Standard	Smooth	Fine grain conveyor	14.9 m	2874731
			Zip Clip	Standard	Smooth	Fine grain conveyor	14.9 m	2978505
			Zip Clip	Standard	Smooth	Crusher discharge conveyor, folding, extended	20.9 m	WX3167192
			Endless	Standard	Smooth	Crusher discharge conveyor, folding, extended	20.9 m	WX3037899
			Zip Clip	Standard	Cleated belt	Electromagnetic separator	5.1 m	2910184
			Endless	Standard	Smooth	Pre-screen conveyor, folding, left / right	12.4 m	2596212

Original KLEEMANN

CONVEYOR UNIT

CONVEYOR BELTS								
Series code	Serial code	Series range	Version	Variant	Conveyor belt type	Belt conveyor	Conveyor length	Part no.
MR 110 EVO	K019	1 - 9999	Endless	Standard	Smooth	Crusher discharge conveyor, folding, extended	22.9 m	2383550
			Zip Clip	Standard	Cleated belt	Permanent magnet separator	5.3 m	2946342
			Zip Clip reinforced	Heavy duty	Cleated belt	Electromagnetic separator	5.1 m	2915598
			Zip Clip reinforced	Heavy duty	Cleated belt	Permanent magnet separator	5.3 m	2915601
			Zip Clip	Standard	Smooth	Prescreen conveyor, short, rigid	8.9 m	2902871
			Zip Clip	Standard	Smooth	Crusher discharge conveyor, folding, extended	22.9 m	2902932
			Zip Clip	Standard	Smooth	Fine grain conveyor	14.5 m	2902935
			Zip Clip	Standard	Smooth	Transfer conveyor	3.8 m	2849098
			Zip Clip	Standard	Smooth	Prescreen conveyor, long, rigid	12.9 m	2849100
			Zip Clip	Standard	Smooth	Crusher discharge conveyor, standard	19.6 m	2849104
			Zip Clip	Standard	Cleated belt	Return conveyor, 500 mm	18.8 m	2849127
			Zip Clip	Standard	Smooth	Pre-screen conveyor, folding, left / right	12.4 m	2863250
			Endless	Standard	Cleated belt	Electromagnetic separator	5.1 m	2540481

CONVEYOR BELTS

Series code	Serial code	Series range	Version	Variant	Conveyor belt type	Belt conveyor	Conveyor length	Part no.
MR 110 EVO	K019	1 - 9999	Endless	Standard	Smooth	Transfer conveyor	3.8 m	F20014794
			Endless	Standard	Smooth	Fine grain conveyor	14.5 m	2322377
			Endless	Standard	Cleated belt	Return conveyor, 500 mm	18.8 m	2336219
			Endless	Standard	Smooth	Crusher discharge conveyor, standard	19.6 m	2358281
			Endless	Standard	Smooth	Prescreen conveyor, long, rigid	12.9 m	F20009762
			Endless	Standard	Smooth	Prescreen conveyor, short, rigid	8.9 m	F20011025
			Zip Clip	Standard	Cleated belt	Return conveyor	18.6 m	3123376
MR 122 PRO	K062	66 - 202	Zip Clip	Standard	Smooth	Prescreen conveyor, long, rigid	12.9 m	2902873
			Endless	Standard	Smooth	Prescreen conveyor, long, rigid	13 m	F20015453
		66 - 9999	Zip Clip	Standard	Smooth	Crusher discharge conveyor, folding, extended	24 m	2906256
			Endless	Standard	Cleated belt	Permanent magnet separator	4.7 m	2452708
			Zip Clip	Standard	Cleated belt	Electromagnetic separator	5.9 m	2915595
			Zip Clip	Standard	Smooth	Crusher discharge conveyor, standard	21 m	2850180
			Endless	Standard	Cleated belt	Electromagnetic separator	5.9 m	2203936

Original KLEEMANN

CONVEYOR UNIT

CONVEYOR BELTS								
Series code	Serial code	Series range	Version	Variant	Conveyor belt type	Belt conveyor	Conveyor length	Part no.
MR 122 PRO	K062	66 - 9999	Zip Clip	Standard	Cleated belt / reinforced	Permanent magnet separator	4.6 m	WX3174814
			Endless	Standard	Smooth	Crusher discharge conveyor, folding, extended	24 m	F20018504
			Endless	Standard	Smooth	Crusher discharge conveyor, standard	21 m	F20014924
		203 - 9999	Endless	Standard	Smooth	Prescreen conveyor, long, rigid	12.9 m	F20009762
			Zip Clip	Standard	Smooth	Prescreen conveyor, long, rigid	12.9 m	2849100
MR 130 R EVO	K023	200 - 9999	Zip Clip	Standard	Smooth	Fine grain conveyor	15.3 m	2884287
			Zip Clip	Standard	Cleated belt	Permanent magnet separator	4.7 m	2915584
			Zip Clip	Standard	Cleated belt	Electromagnetic separator	5.7 m	2915592
			Zip Clip	Standard	Smooth	Fine grain conveyor	15.3 m	2906254
			Zip Clip	Standard	Smooth	Crusher discharge conveyor, standard	20.5 m	2849129
			Zip Clip	Standard	Smooth	Transfer conveyor	4.2 m	2849132
			Zip Clip	Standard	Cleated belt	Return conveyor	18.8 m	2850162
			Zip Clip	Standard	Smooth	Prescreen conveyor, short, rigid	8.9 m	2902871
			Zip Clip	Standard	Smooth	Crusher discharge conveyor, folding, extended	23.1 m	2902949

CONVEYOR BELTS

Series code	Serial code	Series range	Version	Variant	Conveyor belt type	Belt conveyor	Conveyor length	Part no.
MR 130 R EVO	K023	200 - 9999	Zip Clip	Standard	Smooth	Prescreen conveyor, long, rigid	12.9 m	2849100
			Endless	Standard	Cleated belt	Permanent magnet separator	4.7 m	M10019176
			Endless	Standard	Cleated belt	Electromagnetic separator	5.7 m	2540777
			Endless	Standard	Smooth	Prescreen conveyor, long, rigid	12.9 m	F20009762
			Endless	Standard	Smooth	Prescreen conveyor, short, rigid	8.9 m	F20011025
			Endless	Standard	Smooth	Crusher discharge conveyor, standard	20.5 m	F20011462
			Endless	Standard	Smooth	Fine grain conveyor	15.3 m	F20011977
			Endless	Standard	Smooth	Fine grain conveyor, folding, extended	17.3 m	F20014597
			Endless	Standard	Smooth	Transfer conveyor	4.2 m	F20014607
			Endless	Standard	Smooth	Crusher discharge conveyor, folding, extended	23.1 m	F20014740
			Endless	Standard	Cleated belt	Return conveyor	18.8 m	2223564
MR 130 Z EVO	K024	70 - 299	Endless	Standard	Smooth	Transfer conveyor	9 m	2265921
		70 - 299	Endless	Standard	Cleated belt	Permanent magnet separator	5.3 m	2701888
		70 - 299	Endless	Standard	Smooth	Fine grain conveyor	11.4 m	2221575
			Endless	Standard	Smooth	Crusher discharge conveyor, standard	18.9 m	2221576

Original KLEEMANN

CONVEYOR UNIT

CONVEYOR BELTS								
Series code	Serial code	Series range	Version	Variant	Conveyor belt type	Belt conveyor	Conveyor length	Part no.
MR 130 Z EVO	K024	70 - 299	Endless	Standard	Cleated belt	Return conveyor	18.5 m	2202488
		70 - 299	Endless	Standard	Smooth	Prescreen conveyor, long, rigid	12.9 m	F20009762
		70 - 299	Endless	Standard	Cleated belt	Electromagnetic separator	5.7 m	2540777
		70 - 299	Zip Clip	Standard	Cleated belt	Electromagnetic separator	5.7 m	2915592
			Zip Clip	Standard	Cleated belt	Permanent magnet separator	5.3 m	2946342
			Zip Clip reinforced	Heavy duty	Cleated belt	Permanent magnet separator	5.3 m	2915601
			Zip Clip	Standard	Smooth	Fine grain conveyor	18.9 m	2884287
		301 - 9999	Endless	Standard	Smooth	Prescreen conveyor, long, rigid	12.9 m	F20009762
			Endless	Standard	Cleated belt	Return conveyor	18.8 m	2223564
			Endless	Standard	Smooth	Prescreen conveyor, short, rigid	8.9 m	F20011025
			Endless	Standard	Smooth	Crusher discharge conveyor, standard	20.5 m	F20011462
			Endless	Standard	Smooth	Fine grain conveyor	15.3 m	F20011977
			Zip Clip	Standard	Cleated belt	Permanent magnet separator	4.7 m	2915584
			Endless	Standard	Smooth	Fine grain conveyor, folding, extended	17.3 m	F20014597
			Zip Clip	Standard	Cleated belt	Electromagnetic separator	5.7 m	2915592

CONVEYOR BELTS

Series code	Serial code	Series range	Version	Variant	Conveyor belt type	Belt conveyor	Conveyor length	Part no.
MR 130 Z EVO	K024	301 - 9999	Zip Clip	Standard	Smooth	Fine grain conveyor	15.3 m	2906254
			Zip Clip	Standard	Smooth	Crusher discharge conveyor, standard	20.5 m	2849129
			Zip Clip	Standard	Smooth	Transfer conveyor	4.2 m	2849132
			Zip Clip	Standard	Cleated belt	Return conveyor	18.8 m	2850162
			Zip Clip	Standard	Smooth	Prescreen conveyor, short, rigid	8.9 m	2902871
			Zip Clip	Standard	Smooth	Crusher discharge conveyor, folding, extended	23.1 m	2902949
			Zip Clip	Standard	Smooth	Prescreen conveyor, long, rigid	12.9 m	2849100
			Endless	Standard	Cleated belt	Permanent magnet separator	4.7 m	M10019176
			Endless	Standard	Smooth	Transfer conveyor	4.2 m	F20014607
			Endless	Standard	Smooth	Crusher discharge conveyor, folding, extended	23.1 m	F20014740
			Endless	Standard	Cleated belt	Electromagnetic separator	5.7 m	2540777
			Zip Clip	Standard	Smooth	Fine grain conveyor	17.3 m	2884287
MR 130 EVO	K077	1 - 9999	Zip Clip	Standard	Smooth	Crusher discharge conveyor, folding, extended	23.6 m	2906259
			Endless	Standard	Cleated belt	Permanent magnet separator	5.3 m	2701888

Original KLEEMANN

CONVEYOR UNIT

CONVEYOR BELTS								
Series code	Serial code	Series range	Version	Variant	Conveyor belt type	Belt conveyor	Conveyor length	Part no.
MR 130 EVO	K077	1 - 9999	Zip Clip	Standard	Cleated belt	Electromagnetic separator	5.1 m	2910184
			Endless	Standard	Smooth	Pre-screen conveyor, folding, left / right	12.4 m	2596212
			Zip Clip reinforced	Heavy duty	Smooth - Epp reinforced version	Crusher discharge conveyor, standard	20.4 m	3030366
			Zip Clip	Standard	Cleated belt	Permanent magnet separator	5.3 m	2946342
			Endless	Standard	Cleated belt	Return conveyor, 650 mm	20.3 m	2367237
			Zip Clip reinforced	Heavy duty	Cleated belt	Electromagnetic separator	5.1 m	2915598
			Zip Clip reinforced	Heavy duty	Cleated belt	Permanent magnet separator	5.3 m	2915601
			Zip Clip	Standard	Smooth	Transfer conveyor	4.2 m	2849132
			Zip Clip	Standard	Smooth	Crusher discharge conveyor, standard	20.4 m	2850168
			Zip Clip	Standard	Cleated belt	Return conveyor	20.3 m	2850173
			Zip Clip	Standard	Smooth	Prescreen conveyor, short, rigid	8.9 m	2902871
			Zip Clip	Standard	Smooth	Prescreen conveyor, long, rigid	12.9 m	2849100
			Zip Clip	Standard	Smooth	Pre-screen conveyor, folding, left / right	12.4 m	2863250
			Zip Clip	Standard	Cleated belt	Return conveyor, 650 mm	20.3 m	2863258

CONVEYOR BELTS

Series code	Serial code	Series range	Version	Variant	Conveyor belt type	Belt conveyor	Conveyor length	Part no.
MR 130 EVO	K077	1 - 9999	Endless	Standard	Cleated belt	Electromagnetic separator	5.1 m	2540481
			Endless	Standard	Smooth	Prescreen conveyor, long, rigid	12.9 m	F20009762
			Endless	Standard	Smooth	Prescreen conveyor, short, rigid	8.9 m	F20011025
			Endless	Standard	Smooth	Transfer conveyor	4.2 m	F20014607
			Endless	Standard	Smooth	Fine grain conveyor	14.7 m	2305013
			Endless	Standard	Cleated belt	Return conveyor	20.3 m	2305085
			Endless	Standard	Smooth	Crusher discharge conveyor, folding, extended	23.6 m	2351696
			Endless	Standard	Smooth	Crusher discharge conveyor, standard	20.4 m	2358152
			Zip Clip	Standard	Smooth	Fine grain conveyor	14.7 m	2906264
	K078	1 - 9999	Zip Clip	Standard	Smooth	Crusher discharge conveyor, folding, extended	23.6 m	2906259
			Endless	Standard	Cleated belt	Permanent magnet separator	5.3 m	2701888
			Endless	Standard	Smooth	Pre-screen conveyor, folding, left / right	12.4 m	2596212
			Zip Clip reinforced	Heavy duty	Smooth - Epp reinforced version	Crusher discharge conveyor, standard	20.4 m	3030366
			Zip Clip	Standard	Cleated belt	Permanent magnet separator	5.3 m	2946342

Original KLEEMANN

CONVEYOR UNIT

CONVEYOR BELTS								
Series code	Serial code	Series range	Version	Variant	Conveyor belt type	Belt conveyor	Conveyor length	Part no.
MR 130 EVO	K078	1 - 9999	Endless	Standard	Cleated belt	Return conveyor, 650 mm	20.3 m	2367237
			Zip Clip	Standard	Cleated belt	Electromagnetic separator	5.1 m	2910184
			Zip Clip reinforced	Heavy duty	Cleated belt	Electromagnetic separator	5.1 m	2915598
			Zip Clip reinforced	Heavy duty	Cleated belt	Permanent magnet separator	5.3 m	2915601
			Zip Clip	Standard	Smooth	Transfer conveyor	4.2 m	2849132
			Zip Clip	Standard	Smooth	Crusher discharge conveyor, standard	20.4 m	2850168
			Zip Clip	Standard	Cleated belt	Return conveyor	20.3 m	2850173
			Zip Clip	Standard	Smooth	Prescreen conveyor, short, rigid	8.9 m	2902871
			Zip Clip	Standard	Smooth	Prescreen conveyor, long, rigid	12.9 m	2849100
			Zip Clip	Standard	Smooth	Pre-screen conveyor, folding, left / right	12.4 m	2863250
			Zip Clip	Standard	Cleated belt	Return conveyor, 650 mm	20.3 m	2863258
			Endless	Standard	Cleated belt	Electromagnetic separator	5.1 m	2540481
			Endless	Standard	Smooth	Prescreen conveyor, long, rigid	12.9 m	F20009762
			Endless	Standard	Smooth	Prescreen conveyor, short, rigid	8.9 m	F20011025

CONVEYOR BELTS

Series code	Serial code	Series range	Version	Variant	Conveyor belt type	Belt conveyor	Conveyor length	Part no.
MR 130 EVO	K078	1 - 9999	Endless	Standard	Smooth	Transfer conveyor	4.2 m	F20014607
			Endless	Standard	Smooth	Fine grain conveyor	14.7 m	2305013
			Endless	Standard	Cleated belt	Return conveyor	20.3 m	2305085
			Endless	Standard	Smooth	Crusher discharge conveyor, folding, extended	23.6 m	2351696
			Endless	Standard	Smooth	Crusher discharge conveyor, standard	20.4 m	2358152
			Zip Clip	Standard	Smooth	Fine grain conveyor	14.7 m	2906264
MSS 352 EVO	K067	200 - 9999	Zip Clip	Standard	Smooth	Hopper discharge conveyor	7.3 m	3009107
			Zip Clip	Standard	Smooth	Fine grain conveyor	5 m	3009110
			Zip Clip	Standard	Smooth	Side conveyor, fine grain	14.7 m	3009113
			Zip Clip	Standard	Cleated belt	Main discharge conveyor	10.1 m	3009117
			Endless	Standard	Cleated belt	Main discharge conveyor	10.1 m	WX3221587
			Endless	Standard	Smooth	Hopper discharge conveyor	7.3 m	WX3221577
			Endless	Standard	Smooth	Fine grain conveyor	5 m	WX3221579
			Endless	Standard	Cleated belt	Side conveyor, fine grain	14.7 m	WX3221580
		200 - 9999	Zip Clip	Standard	Smooth	Fine grain conveyor		2884287
		200 - 9999	Zip Clip	Standard	Cleated belt	Side conveyor, fine grain	14.7 m	3013181

Original KLEEMANN

CONVEYOR UNIT

CONVEYOR BELTS								
Series code	Serial code	Series range	Version	Variant	Conveyor belt type	Belt conveyor	Conveyor length	Part no.
MSS 502 EVO	K066	200 - 9999	Zip Clip	Standard	Smooth	Fine grain conveyor	7.2 m	3009109
			Zip Clip	Standard	Smooth	Side conveyor, fine grain	14.2 m	3009111
			Zip Clip	Standard	Smooth	Side conveyor, medium grain	15.1 m	3009115
			Zip Clip	Standard	Cleated belt	Main discharge conveyor	10.1 m	3009116
			Zip Clip	Standard	Smooth	Hopper discharge conveyor	8.8 m	3009106
			Endless	Standard	Cleated belt	Main discharge conveyor	10.1 m	WX3221571
			Endless	Standard	Smooth	Hopper discharge conveyor	8.8 m	WX3221624
			Endless	Standard	Smooth	Fine grain conveyor	7.1 m	WX3221686
			Endless	Standard	Smooth	Side conveyor, fine grain	14.2 m	WX3221687
			Endless	Standard	Smooth	Side conveyor, medium grain	15.1 m	WX3221689
MS 14 Z	K068	200 - 9999	Zip Clip	Standard	Smooth	Fine grain conveyor	7.3 m	2884287
		200 - 9999	Endless	Standard	Smooth	Hopper discharge conveyor	7.3 m	2345644
			Endless	Standard	Smooth	Main discharge conveyor	10.4 m	2345647
			Endless	Standard	Cleated belt	Side discharge conveyor, left / right	16.4 m	2345646
			Endless	Standard	Cleated belt	Feeding conveyor	16.5 m	2345645

CONVEYOR BELTS

Series code	Serial code	Series range	Version	Variant	Conveyor belt type	Belt conveyor	Conveyor length	Part no.
MS 16 Z	K048	200 - 9999	Zip Clip	Standard	Smooth	Main discharge conveyor	13.3 m	2983204
			Zip Clip	Standard	Cleated belt	Side discharge conveyor, left / right	18.9 m	2992026
			Zip Clip	Standard	Smooth	Feeding conveyor	20 m	2983064
			Zip Clip	Standard	Cleated belt	Feeding conveyor	20 m	2983147
			Zip Clip	Standard	Smooth	Chute discharge conveyor, short	8.1 m	2850235
			Endless	Standard	Smooth	Chute discharge conveyor, long	9.8 m	M10020071
			Endless	Standard	Smooth	Feeding conveyor	20 m	M10020212
			Endless	Standard	Cleated belt	Side discharge conveyor, left / right	18.9 m	WX3221981
			Endless	Standard	Smooth	Main discharge conveyor	13.3 m	WX3221983
			Endless	Standard	Cleated belt	Feeding conveyor	20 m	WX3221570
			Zip Clip	Standard	Smooth	Chute discharge conveyor, long	9.9 m	2983152
			Endless	Standard	Smooth	Chute discharge conveyor, short	8 m	WX3221975
		200 - 9999	Endless	Standard	Cleated belt	Magnet_test BTH		2957960
			Zip Clip	Standard	Smooth	Fine grain conveyor		2884287
MS 16 D	K049	200 - 9999	Zip Clip	Standard	Smooth	Fine grain conveyor		2884287
		200 - 9999	Endless	Standard	Cleated belt	Feeding conveyor	20 m	WX3221570
			Zip Clip	Standard	Cleated belt	Feeding conveyor	20 m	2983147

Original KLEEMANN

CONVEYOR UNIT

CONVEYOR BELTS								
Series code	Serial code	Series range	Version	Variant	Conveyor belt type	Belt conveyor	Conveyor length	Part no.
MS 16 D	K049	200 - 9999	Zip Clip	Standard	Smooth	Chute discharge conveyor, long	9.9 m	2983152
			Zip Clip	Standard	Smooth	Main discharge conveyor	13.3 m	2983204
			Zip Clip	Standard	Cleated belt	Oversize grain conveyor, 650 mm	17.7 m	2992022
			Zip Clip	Standard	Cleated belt	Side discharge conveyor, left / right	18.9 m	2992026
			Zip Clip	Standard	Cleated belt	Oversize grain conveyor, 500 mm	17.7 m	2992034
			Zip Clip	Standard	Smooth	Feeding conveyor	20 m	2983064
			Zip Clip	Standard	Smooth	Transfer conveyor	4.1 m	2850170
			Zip Clip	Standard	Smooth	Chute discharge conveyor, short	8.1 m	2850235
			Endless	Standard	Smooth	Transfer conveyor	4.1 m	2286400
			Endless	Standard	Cleated belt	Oversize grain conveyor	17.7 m	WX3221535
			Endless	Standard	Smooth	Chute discharge conveyor, short	8 m	WX3221975
			Endless	Standard	Smooth	Chute discharge conveyor, long	9.8 m	M10020071
			Endless	Standard	Smooth	Feeding conveyor	20 m	M10020212
			Endless	Standard	Cleated belt	Side discharge conveyor, left / right	18.9 m	WX3221981
			Endless	Standard	Smooth	Main discharge conveyor	13.3 m	WX3221983

CONVEYOR BELTS

Series code	Serial code	Series range	Version	Variant	Conveyor belt type	Belt conveyor	Conveyor length	Part no.
MS 16 D	K049	200 - 9999	Endless	Standard	Cleated belt	Oversize grain conveyor	17.7 m	WX3221515
		200 - 9999	Endless	Standard	Cleated belt	Magnet_test BTH		2957960
MS 19 Z	K054	200 - 9999	Zip Clip	Standard	Smooth	Fine grain conveyor		2884287
			Endless	Standard	Cleated belt	Magnet_test BTH		2957960
		200 - 9999	Zip Clip	Standard	Smooth	Main discharge conveyor	16.8 m	2983076
			Zip Clip	Standard	Smooth	Chute discharge conveyor, long	9.9 m	2983152
			Zip Clip	Standard	Smooth	Feeding conveyor	24.4 m	2983071
			Zip Clip	Standard	Cleated belt	Feeding conveyor	24.4 m	2983142
			Zip Clip	Standard	Smooth	Chute discharge conveyor, short	8.1 m	2850235
			Zip Clip	Standard	Cleated belt	Side discharge conveyor, left / right	21.3 m	2850271
			Endless	Standard	Smooth	Chute discharge conveyor, short	8 m	WX3221975
			Endless	Standard	Smooth	Chute discharge conveyor, long	9.8 m	M10020071
			Endless	Standard	Smooth	Feeding conveyor	24.4 m	WX3221979
			Endless	Standard	Cleated belt	Side discharge conveyor, left / right	21.3 m	2228594
			Endless	Standard	Cleated belt	Feeding conveyor	24.4 m	WX3221531
			Endless	Standard	Smooth	Main discharge conveyor	16.8 m	2287587
MS 19 D	K055	200 - 9999	Endless	Standard	Cleated belt	Magnet_test BTH		2957960

Original KLEEMANN

CONVEYOR UNIT

CONVEYOR BELTS								
Series code	Serial code	Series range	Version	Variant	Conveyor belt type	Belt conveyor	Conveyor length	Part no.
MS 19 D	K055	200 - 9999	Endless	Standard	Smooth	Main discharge conveyor	16.8 m	2287587
			Zip Clip	Standard	Smooth	Main discharge conveyor	16.8 m	2983076
			Zip Clip	Standard	Smooth	Chute discharge conveyor, long	9.9 m	2983152
			Zip Clip	Standard	Cleated belt	Oversize grain conveyor, 650 mm	17.8 m	2992020
			Zip Clip	Standard	Cleated belt	Oversize grain conveyor, 650 mm	17.7 m	2992022
			Zip Clip	Standard	Cleated belt	Oversize grain conveyor, 500 mm	17.7 m	2992034
			Zip Clip	Standard	Smooth	Feeding conveyor	24.4 m	2983071
			Zip Clip	Standard	Cleated belt	Feeding conveyor	24.4 m	2983142
			Zip Clip	Standard	Smooth	Transfer conveyor	4.1 m	2850170
			Zip Clip	Standard	Smooth	Chute discharge conveyor, short	8.1 m	2850235
			Endless	Standard	Cleated belt	Oversize grain conveyor	17.7 m	WX3221535
			Zip Clip	Standard	Cleated belt	Side discharge conveyor, left / right	21.3 m	2850271
			Endless	Standard	Smooth	Chute discharge conveyor, short	8 m	WX3221975
			Endless	Standard	Smooth	Chute discharge conveyor, long	9.8 m	M10020071
			Endless	Standard	Smooth	Feeding conveyor	24.4 m	WX3221979

CONVEYOR BELTS

Series code	Serial code	Series range	Version	Variant	Conveyor belt type	Belt conveyor	Conveyor length	Part no.
MS 19 D	K055	200 - 9999	Endless	Standard	Cleated belt	Oversize grain conveyor	17.7 m	WX3221515
			Endless	Standard	Cleated belt	Side discharge conveyor, left / right	21.3 m	2228594
			Endless	Standard	Smooth	Transfer conveyor	4.1 m	2286400
			Endless	Standard	Cleated belt	Feeding conveyor	24.4 m	WX3221531
			Endless	Standard	Cleated belt	Oversize grain conveyor, 650 mm	17.8 m	WX3221993
MSS 1102 PRO	K076	1 - 9999	Zip Clip	Standard	Smooth	Chute discharge conveyor, short	10.6 m	2900754
			Zip Clip	Standard	Smooth	Side conveyor, medium grain	17.2 m	3009194
			Zip Clip	Standard	Smooth	Side conveyor, fine grain	16.6 m	3009188
			Zip Clip	Standard	Cleated belt	Main discharge conveyor	11.8 m	2900756
			Endless	Standard	Cleated belt	Main discharge conveyor	11.8 m	2345653
			Endless	Standard	Smooth	Chute discharge conveyor, short	10.6 m	WX3221572
			Endless	Standard	Smooth	Fine grain conveyor	11.9 m	WX3221727
			Endless	Standard	Smooth	Side conveyor, fine grain	16.6 m	WX3221732
			Endless	Standard	Smooth	Side conveyor, medium grain	17.2 m	WX3221736
			Zip Clip	Standard	Smooth	Fine grain conveyor	11.9 m	3009185

Original KLEEMANN

CONVEYOR UNIT

CONVEYOR BELTS								
Series code	Serial code	Series range	Version	Variant	Conveyor belt type	Belt conveyor	Conveyor length	Part no.
MSC 702 EVO	K083	1 - 9999	Endless	Standard	Smooth	Feeding conveyor	21.5 m	2366596
		1 - 9999	Endless	Standard	Cleated belt	Feeding conveyor	21.5 m	2409572
			Zip Clip	Standard	Cleated belt	Feeding conveyor	21.5 m	2946346
			Zip Clip	Standard	Cleated belt	Side discharge conveyor, left / right	21.2 m	2946347
			Zip Clip	Standard	Smooth	Main discharge conveyor	14.1 m	2946344
			Zip Clip	Standard	Smooth	Chute discharge conveyor, long, 10 m³	9.7 m	2946345
			Zip Clip	Standard	Smooth	Chute discharge conveyor, short	8.1 m	2850235
			Zip Clip	Standard	Smooth	Feeding conveyor	21.5 m	2850264
		1 - 9999	Endless	Standard	Smooth	Chute discharge conveyor, long, 10 m³	9.7 m	2354663
			Endless	Standard	Cleated belt	Side discharge conveyor, left / right	21.2 m	2364608
			Endless	Standard	Smooth	Chute discharge conveyor, short, 8 m³	8.1 m	2365474
			Endless	Standard	Smooth	Main discharge conveyor	14.1 m	2365692
MSC 702i EVO	K103	1 - 9999	Endless	Standard	Smooth	Feeding conveyor	21.5 m	2366596
		1 - 9999	Endless	Standard	Cleated belt	Feeding conveyor	21.5 m	2409572
			Zip Clip	Standard	Cleated belt	Feeding conveyor	21.5 m	2946346
			Zip Clip	Standard	Cleated belt	Side discharge conveyor, left / right	21.2 m	2946347

CONVEYOR BELTS

Series code	Serial code	Series range	Version	Variant	Conveyor belt type	Belt conveyor	Conveyor length	Part no.
MSC 702i EVO	K103	1 - 9999	Zip Clip	Standard	Smooth	Main discharge conveyor	14.1 m	2946344
			Zip Clip	Standard	Smooth	Chute discharge conveyor, long, 10 m³	9.7 m	2946345
			Zip Clip	Standard	Smooth	Chute discharge conveyor, short	8.1 m	2850235
			Zip Clip	Standard	Smooth	Feeding conveyor	21.5 m	2850264
		1 - 9999	Endless	Standard	Smooth	Chute discharge conveyor, long, 10 m³	9.7 m	2354663
			Endless	Standard	Cleated belt	Side discharge conveyor, left / right	21.2 m	2364608
			Endless	Standard	Smooth	Chute discharge conveyor, short, 8 m³	8.1 m	2365474
			Endless	Standard	Smooth	Main discharge conveyor	14.1 m	2365692
MSC 703 EVO	K084	1 - 9999	Endless	Standard	Smooth	Feeding conveyor	21.5 m	2366596
		1 - 9999	Endless	Standard	Cleated belt	Feeding conveyor	21.5 m	2409572
			Zip Clip	Standard	Cleated belt	Feeding conveyor	21.5 m	2946346
			Zip Clip	Standard	Cleated belt	Side discharge conveyor, left / right	21.2 m	2946347
			Zip Clip	Standard	Smooth	Main discharge conveyor	14.1 m	2946344
			Zip Clip	Standard	Smooth	Chute discharge conveyor, long, 10 m³	9.7 m	2946345
			Zip Clip	Standard	Smooth	Transfer conveyor	4.2 m	2850230

Original KLEEMANN

CONVEYOR UNIT

CONVEYOR BELTS								
Series code	Serial code	Series range	Version	Variant	Conveyor belt type	Belt conveyor	Conveyor length	Part no.
MSC 703 EVO	K084	1 - 9999	Zip Clip	Standard	Smooth	Chute discharge conveyor, short	8.1 m	2850235
			Zip Clip	Standard	Cleated belt	Oversize grain conveyor	18.6 m	2850249
			Endless	Standard	Cleated belt	Side discharge conveyor, left / right	21.2 m	2364608
			Zip Clip	Standard	Smooth	Feeding conveyor	21.5 m	2850264
		1 - 9999	Endless	Standard	Smooth	Chute discharge conveyor, long, 10 m³	9.7 m	2354663
			Endless	Standard	Smooth	Transfer conveyor	4.2 m	2355971
			Endless	Standard	Cleated belt	Oversize grain conveyor	18.6 m	2355976
			Endless	Standard	Smooth	Chute discharge conveyor, short, 8 m³	8.1 m	2365474
			Endless	Standard	Smooth	Main discharge conveyor	14.1 m	2365692
MSC 703i EVO	K104	1 - 9999	Endless	Standard	Smooth	Feeding conveyor	21.5 m	2366596
		1 - 9999	Endless	Standard	Cleated belt	Feeding conveyor	21.5 m	2409572
			Zip Clip	Standard	Cleated belt	Feeding conveyor	21.5 m	2946346
			Zip Clip	Standard	Cleated belt	Side discharge conveyor, left / right	21.2 m	2946347
			Zip Clip	Standard	Smooth	Main discharge conveyor	14.1 m	2946344
			Zip Clip	Standard	Smooth	Chute discharge conveyor, long, 10 m³	9.7 m	2946345
			Zip Clip	Standard	Smooth	Transfer conveyor	4.2 m	2850230

CONVEYOR BELTS

Series code	Serial code	Series range	Version	Variant	Conveyor belt type	Belt conveyor	Conveyor length	Part no.
MSC 703i EVO	K104	1 - 9999	Zip Clip	Standard	Smooth	Chute discharge conveyor, short	8.1 m	2850235
			Zip Clip	Standard	Cleated belt	Oversize grain conveyor	18.6 m	2850249
		1 - 9999	Endless	Standard	Cleated belt	Side discharge conveyor, left / right	21.2 m	2364608
		1 - 9999	Zip Clip	Standard	Smooth	Feeding conveyor	21.5 m	2850264
		1 - 9999	Endless	Standard	Smooth	Chute discharge conveyor, long, 10 m³	9.7 m	2354663
			Endless	Standard	Smooth	Transfer conveyor	4.2 m	2355971
			Endless	Standard	Cleated belt	Oversize grain conveyor	18.6 m	2355976
			Endless	Standard	Smooth	Chute discharge conveyor, short, 8 m³	8.1 m	2365474
			Endless	Standard	Smooth	Main discharge conveyor	14.1 m	2365692
MSC 952 EVO	K085	1 - 9999	Endless	Standard	Smooth	Chute discharge conveyor, short, 8 m³	8.1 m	2365474
		1 - 9999	Endless	Standard	Cleated belt	Feeding conveyor	24.9 m	2404381
			Zip Clip	Standard	Cleated belt	Feeding conveyor	24.9 m	2948757
			Zip Clip	Standard	Smooth	Main discharge conveyor	23.9 m	2948759
			Zip Clip	Standard	Smooth	Chute discharge conveyor, long, 10 m³	9.7 m	2946345
			Zip Clip	Standard	Smooth	Feeding conveyor	24.9 m	2850262

Original KLEEMANN

CONVEYOR UNIT

CONVEYOR BELTS								
Series code	Serial code	Series range	Version	Variant	Conveyor belt type	Belt conveyor	Conveyor length	Part no.
MSC 952 EVO	K085	1 - 9999	Zip Clip	Standard	Cleated belt	Side discharge conveyor, left / right	21.2 m	2850233
			Zip Clip	Standard	Smooth	Chute discharge conveyor, short	8.1 m	2850235
		1 - 9999	Endless	Standard	Cleated belt	Side discharge conveyor, left / right	21.2 m	2347436
			Endless	Standard	Smooth	Feeding conveyor	24.9 m	2350690
			Endless	Standard	Smooth	Main discharge conveyor	17.1 m	2351092
			Endless	Standard	Smooth	Chute discharge conveyor, long, 10 m³	9.7 m	2354663
MSC 952i EVO	K105	1 - 9999	Endless	Standard	Smooth	Chute discharge conveyor, short, 8 m³	8.1 m	2365474
		1 - 9999	Endless	Standard	Cleated belt	Feeding conveyor	24.9 m	2404381
			Zip Clip	Standard	Cleated belt	Feeding conveyor	24.9 m	2948757
			Zip Clip	Standard	Smooth	Main discharge conveyor	23.9 m	2948759
			Zip Clip	Standard	Smooth	Chute discharge conveyor, long, 10 m³	9.7 m	2946345
			Zip Clip	Standard	Smooth	Chute discharge conveyor, short	8.1 m	2850235
			Zip Clip	Standard	Cleated belt	Side discharge conveyor, left / right	21.2 m	2850233
			Zip Clip	Standard	Smooth	Feeding conveyor	24.9 m	2850262
		1 - 9999	Endless	Standard	Smooth	Main discharge conveyor	17.1 m	2351092

CONVEYOR BELTS

Series code	Serial code	Series range	Version	Variant	Conveyor belt type	Belt conveyor	Conveyor length	Part no.
MSC 952i EVO	K105	1 - 9999	Endless	Standard	Smooth	Chute discharge conveyor, long, 10 m³	9.7 m	2354663
			Endless	Standard	Cleated belt	Side discharge conveyor, left / right	21.2 m	2347436
			Endless	Standard	Smooth	Feeding conveyor	24.9 m	2350690
MSC 953 EVO	K086	1 - 9999	Endless	Standard	Smooth	Feeding conveyor	24.9 m	2350690
		1 - 9999	Endless	Standard	Cleated belt	Feeding conveyor	24.9 m	2404381
			Zip Clip	Standard	Cleated belt	Feeding conveyor	24.9 m	2948757
			Zip Clip	Standard	Smooth	Main discharge conveyor	23.9 m	2948759
			Zip Clip	Standard	Smooth	Chute discharge conveyor, long, 10 m³	9.7 m	2946345
			Zip Clip	Standard	Smooth	Transfer conveyor	4.2 m	2850230
			Zip Clip	Standard	Cleated belt	Side discharge conveyor, left / right	21.2 m	2850233
			Zip Clip	Standard	Smooth	Chute discharge conveyor, short	8.1 m	2850235
			Zip Clip	Standard	Cleated belt	Oversize grain conveyor	18.6 m	2850249
			Zip Clip	Standard	Smooth	Feeding conveyor	24.9 m	2850262
		1 - 9999	Endless	Standard	Smooth	Main discharge conveyor	17.1 m	2351092
			Endless	Standard	Smooth	Chute discharge conveyor, long, 10 m³	9.7 m	2354663
			Endless	Standard	Smooth	Transfer conveyor	4.2 m	2355971

Original KLEEMANN

CONVEYOR UNIT

CONVEYOR BELTS								
Series code	Serial code	Series range	Version	Variant	Conveyor belt type	Belt conveyor	Conveyor length	Part no.
MSC 953 EVO	K086	1 - 9999	Endless	Standard	Cleated belt	Oversize grain conveyor	18.6 m	2355976
			Endless	Standard	Smooth	Chute discharge conveyor, short, 8 m³	8.1 m	2365474
			Endless	Standard	Cleated belt	Side discharge conveyor, left / right	21.2 m	2347436
MSC 953i EVO	K106	1 - 9999	Endless	Standard	Smooth	Chute discharge conveyor, short, 8 m³	8.1 m	2365474
		1 - 9999	Endless	Standard	Cleated belt	Feeding conveyor	24.9 m	2404381
			Zip Clip	Standard	Cleated belt	Feeding conveyor	24.9 m	2948757
			Zip Clip	Standard	Smooth	Main discharge conveyor	23.9 m	2948759
			Zip Clip	Standard	Smooth	Chute discharge conveyor, long, 10 m³	9.7 m	2946345
			Zip Clip	Standard	Smooth	Chute discharge conveyor, short	8.1 m	2850235
			Zip Clip	Standard	Cleated belt	Oversize grain conveyor	18.6 m	2850249
			Zip Clip	Standard	Smooth	Transfer conveyor	4.2 m	2850230
			Zip Clip	Standard	Cleated belt	Side discharge conveyor, left / right	21.2 m	2850233
			Zip Clip	Standard	Smooth	Feeding conveyor	24.9 m	2850262
		1 - 9999	Endless	Standard	Cleated belt	Side discharge conveyor, left / right	21.2 m	2347436
			Endless	Standard	Smooth	Feeding conveyor	24.9 m	2350690

CONVEYOR BELTS

Series code	Serial code	Series range	Version	Variant	Conveyor belt type	Belt conveyor	Conveyor length	Part no.
MSC 953i EVO	K106	1 - 9999	Endless	Standard	Smooth	Main discharge conveyor	17.1 m	2351092
			Endless	Standard	Smooth	Chute discharge conveyor, long, 10 m³	9.7 m	2354663
			Endless	Standard	Smooth	Transfer conveyor	4.2 m	2355971
			Endless	Standard	Cleated belt	Oversize grain conveyor	18.6 m	2355976
MC 110 EVO	K116	1 - 9999	Endless	Standard	Smooth	Crusher discharge conveyor, standard	20 m	2757762
			Zip Clip reinforced	Heavy duty	Smooth - Toughflex Epp	Crusher discharge conveyor, folding, extended	23 m	2978496
			Zip Clip reinforced	Heavy duty	Smooth - Toughflex Epp	Crusher discharge conveyor, standard	20 m	2978498
			Endless	Standard	Cleated belt	Electromagnetic separator	4.5 m	2323184
			Zip Clip reinforced	Heavy duty	Smooth	Crusher discharge conveyor, folding, extended	23 m	2915418
			Zip Clip	Standard	Smooth	Crusher discharge conveyor, standard	20 m	2915437
			Zip Clip reinforced	Heavy duty	Cleated belt	Electromagnetic separator	4.5 m	2915543
			Zip Clip	Standard	Cleated belt	Electromagnetic separator	4.5 m	2915578

Original KLEEMANN

CONVEYOR UNIT

CONVEYOR BELTS								
Series code	Serial code	Series range	Version	Variant	Conveyor belt type	Belt conveyor	Conveyor length	Part no.
MC 110 EVO	K116	1 - 9999	Zip Clip	Standard	Smooth	Pre-screen conveyor, short, rigid, left / right	6.1 m	2902875
			Zip Clip	Standard	Smooth	Pre-screen conveyor, folding, left / right	10.7 m	2902876
			Endless, reinforced	Heavy duty	Smooth - Toughflex Epp	Crusher discharge conveyor, folding, extended	23 m	2845542
			Endless, reinforced	Heavy duty	Smooth - Toughflex Epp	Crusher discharge conveyor, standard	20 m	2845553
			Endless, reinforced	Heavy duty	Smooth	Crusher discharge conveyor, folding, extended	23 m	2814449
			Endless	Standard	Smooth	Pre-screen conveyor, short, rigid, left / right	6.1 m	2226095
			Endless	Standard	Smooth	Pre-screen conveyor, folding, left / right	10.7 m	2262332
MCO 90 EVO	K120	1 - 9999	Endless	Standard	Cleated belt	Return conveyor	18.8 m	2792510
			Endless	Standard	Smooth	Transfer conveyor	3.8 m	F20014794
			Endless	Standard	Smooth	Crusher discharge conveyor, folding, extended	20.5 m	3036228
			Zip Clip	Standard	Cleated belt	Return conveyor	18.6 m	3123376
			Endless	Standard	Cleated belt	Return conveyor	18.6 m	WX3043733
			Endless	Standard	Smooth	Medium grain conveyor	13.3 m	3084386

CONVEYOR BELTS

Series code	Serial code	Series range	Version	Variant	Conveyor belt type	Belt conveyor	Conveyor length	Part no.
MCO 90 EVO	K120	1 - 9999	Zip Clip	Standard	Smooth	Medium grain conveyor	13.3 m	3123373
			Zip Clip	Standard	Smooth	Fine grain conveyor	14.9 m	2978505
			Zip Clip	Standard	Smooth	Crusher discharge conveyor, standard	19 m	2978509
			Zip Clip	Standard	Smooth	Crusher discharge conveyor, folding, extended	21.7 m	2978539
			Endless	Standard	Smooth	Crusher discharge conveyor, standard	19 m	2821995
			Endless	Standard	Smooth	Crusher discharge conveyor, folding, extended	21.7 m	2844215
			Zip Clip	Standard	Smooth	Transfer conveyor	3.8 m	2849098
			Zip Clip	Standard	Smooth	Prescreen conveyor, long, rigid	12.9 m	2849100
			Zip Clip	Standard	Cleated belt	Return conveyor, 500 mm	18.8 m	2849127
			Endless	Standard	Smooth	Fine grain conveyor	14.9 m	2874731
			Endless	Standard	Smooth	Feeding conveyor	12.6 m	2762177
			Endless	Standard	Smooth	Prescreen conveyor, long, rigid	12.9 m	F20009762
			Zip Clip	Standard	Smooth	Crusher discharge conveyor, folding, extended	20.5 m	3123372
	K121	1 - 9999	Endless	Standard	Cleated belt	Return conveyor	18.8 m	2792510

Original KLEEMANN

CONVEYOR UNIT

CONVEYOR BELTS								
Series code	Serial code	Series range	Version	Variant	Conveyor belt type	Belt conveyor	Conveyor length	Part no.
MCO 90 EVO	K121	1 - 9999	Endless	Standard	Smooth	Transfer conveyor	3.8 m	F20014794
			Zip Clip	Standard	Cleated belt	Return conveyor	18.6 m	3123376
			Zip Clip	Standard	Smooth	Medium grain conveyor	13.3 m	3123373
			Endless	Standard	Smooth	Medium grain conveyor	13.3 m	3084386
			Endless	Standard	Smooth	Crusher discharge conveyor, folding, extended	20.5 m	3036228
			Zip Clip	Standard	Smooth	Crusher discharge conveyor, folding, extended	20.5 m	3123372
			Zip Clip	Standard	Smooth	Fine grain conveyor	14.9 m	2978505
			Zip Clip	Standard	Smooth	Crusher discharge conveyor, standard	19 m	2978509
			Zip Clip	Standard	Smooth	Crusher discharge conveyor, folding, extended	21.7 m	2978539
			Zip Clip	Standard	Cleated belt	Return conveyor, 500 mm	18.8 m	2849127
			Endless	Standard	Smooth	Crusher discharge conveyor, standard	19 m	2821995
			Endless	Standard	Smooth	Crusher discharge conveyor, folding, extended	21.7 m	2844215
			Zip Clip	Standard	Smooth	Transfer conveyor	3.8 m	2849098

CONVEYOR BELTS

Series code	Serial code	Series range	Version	Variant	Conveyor belt type	Belt conveyor	Conveyor length	Part no.
MCO 90 EVO	K121	1 - 9999	Zip Clip	Standard	Smooth	Prescreen conveyor, long, rigid	12.9 m	2849100
			Endless	Standard	Smooth	Fine grain conveyor	14.9 m	2874731
			Endless	Standard	Smooth	Feeding conveyor	12.6 m	2762177
			Endless	Standard	Smooth	Prescreen conveyor, long, rigid	12.9 m	F20009762
			Endless	Standard	Cleated belt	Return conveyor	18.6 m	WX3043733
MSS 802 EVO	K082	1 - 9999	Zip Clip	Standard	Smooth	Hopper discharge conveyor	10 m	2924093
			Endless	Standard	Smooth	Side conveyor, fine grain, long	16.4 m	2746248
			Endless	Standard	Smooth	Hopper discharge conveyor	10 m	2724468
			Endless	Standard	Cleated belt	Side conveyor, medium grain, telescopic	18.4 m	2670262
			Endless	Standard	Smooth	Fine grain conveyor	9.6 m	2670353
			Endless	Standard	Smooth	Side conveyor, fine grain, telescopic	18.4 m	2670360
			Zip Clip	Standard	Smooth	Fine grain conveyor	9.6 m	2924073
			Zip Clip	Standard	Smooth	Side conveyor, fine grain, long	18.4 m	2924080
			Zip Clip	Standard	Smooth	Side conveyor, fine grain, telescopic	18.4 m	2924082
			Zip Clip	Standard	Cleated belt	Side conveyor, medium grain, long	18.4 m	2924088

Original KLEEMANN

CONVEYOR UNIT

CONVEYOR BELTS								
Series code	Serial code	Series range	Version	Variant	Conveyor belt type	Belt conveyor	Conveyor length	Part no.
MSS 802 EVO	K082	1 - 9999	Zip Clip	Standard	Cleated belt	Side conveyor, medium grain, telescopic	18.4 m	2924091
			Endless	Standard	Cleated belt	Side conveyor, medium grain, long	18.4 m	2746448
		10 - 9999	Endless	Standard	Cleated belt	Main discharge conveyor, standard	13 m	2738993
			Endless	Standard	Cleated belt	Main discharge conveyor, extended	15.9 m	2670376
			Zip Clip	Standard	Cleated belt	Main discharge conveyor, extended	15.9 m	2924086
			Zip Clip	Standard	Cleated belt	Main discharge conveyor, standard	13 m	2924084
			Endless	Standard	Cleated belt	Permanent magnet separator	4.7 m	2452708
			Zip Clip	Standard	Cleated belt / reinforced	Permanent magnet separator	4.6 m	WX3174814
MR 122i PRO	K031	1 - 9999	Endless	Standard	Smooth	Prescreen conveyor, long, rigid	12.9 m	F20009762
			Endless	Standard	Smooth	Crusher discharge conveyor, folding, extended	24 m	F20018504
			Zip Clip	Standard	Cleated belt / reinforced	Permanent magnet separator	4.6 m	WX3174814
			Endless	Standard	Smooth	Crusher discharge conveyor, standard	21 m	F20014924

CONVEYOR BELTS

Series code	Serial code	Series range	Version	Variant	Conveyor belt type	Belt conveyor	Conveyor length	Part no.
MR 122i PRO	K031	1 - 9999	Zip Clip	Standard	Smooth	Crusher discharge conveyor, folding, extended	24 m	2906256
			Endless	Standard	Cleated belt	Permanent magnet separator	4.7 m	2452708
			Zip Clip	Standard	Cleated belt	Electromagnetic separator	5.9 m	2915595
			Zip Clip	Standard	Smooth	Crusher discharge conveyor, standard	21 m	2850180
			Endless	Standard	Cleated belt	Electromagnetic separator	5.9 m	2203936
			Zip Clip	Standard	Smooth	Prescreen conveyor, long, rigid	12.9 m	2849100
MSC 1202 PRO	K129	1 - 9999	Zip Clip	Standard	Smooth	Chute discharge conveyor, long	9.9 m	2983152
			Endless	Standard	Smooth	Chute discharge conveyor, long	9.8 m	M10020071
			Zip Clip	Standard	Smooth	Feeding conveyor	26.3 m	3007917
			Zip Clip	Standard	Cleated belt	Feeding conveyor	26.3 m	3007924
			Zip Clip	Standard	Cleated belt	Side discharge conveyor, left / right, slewing	22.9 m	3007927
			Zip Clip	Standard	Smooth	Main discharge conveyor	18.7 m	3007956
			Endless	Standard	Smooth	Main discharge conveyor	19 m	2848413

Original KLEEMANN

CONVEYOR UNIT

CONVEYOR BELTS								
Series code	Serial code	Series range	Version	Variant	Conveyor belt type	Belt conveyor	Conveyor length	Part no.
MSC 1202 PRO	K129	1 - 9999	Endless	Standard	Cleated belt	Feeding conveyor	26.5 m	WX3221768
			Endless	Standard	Smooth	Feeding conveyor	26.5 m	WX3221777
			Endless	Standard	Cleated belt	Side discharge conveyor, left / right, slewing	22.5 m	2855562
MSC 1203 PRO	K130	1 - 9999	Zip Clip	Standard	Smooth	Chute discharge conveyor, long	9.9 m	2983152
			Endless	Standard	Smooth	Chute discharge conveyor, long	9.8 m	M10020071
			Zip Clip	Standard	Smooth	Feeding conveyor	26.3 m	3007917
			Zip Clip	Standard	Cleated belt	Feeding conveyor	26.3 m	3007924
			Zip Clip	Standard	Cleated belt	Side discharge conveyor, left / right, slewing	22.9 m	3007927
			Zip Clip	Standard	Smooth	Main discharge conveyor	18.7 m	3007956
			Zip Clip	Standard	Smooth	Transfer conveyor	5.1 m	3007980
			Zip Clip	Standard	Cleated belt	Oversize grain conveyor	20.8 m	3007981
			Endless	Standard	Smooth	Main discharge conveyor	19 m	2848413
			Endless	Standard	Cleated belt	Feeding conveyor	26.5 m	WX3221768
			Endless	Standard	Smooth	Feeding conveyor	26.5 m	WX3221777
			Endless	Standard	Cleated belt	Side discharge conveyor, left / right, slewing	22.5 m	2855562

CONVEYOR BELTS

Series code	Serial code	Series range	Version	Variant	Conveyor belt type	Belt conveyor	Conveyor length	Part no.
MSC 1203 PRO	K130	1 - 9999	Endless	Standard	Smooth	Transfer conveyor	5.4 m	2859970
			Endless	Standard	Cleated belt	Oversize grain conveyor	21 m	2860210
MBT 24	K127	1 - 9999	Endless	Standard	Smooth	Main discharge conveyor	50.5 m	WX3221752
			Zip Clip	Standard	Smooth	Main discharge conveyor	48 m	3060506
MBW 15	K126	1 - 9999	Zip Clip	Standard	Smooth	Main discharge conveyor	30.4 m	3057521
			Endless	Standard	Smooth	Main discharge conveyor	30.4 m	WX3221765
MBT 20	K128	1 - 9999	Zip Clip	Standard	Smooth	Fine grain conveyor		2884287
			Zip Clip	Standard	Smooth	Main discharge conveyor	37.8 m	WX3060507
MR 130 PRO	K125	1 - 9999	Zip Clip	Standard	Smooth	Fine grain conveyor	16.4 m	3125488
			Endless	Standard	Smooth	Transfer conveyor	4.2 m	F20014607
			Zip Clip	Standard	Smooth	Pre-screen conveyor, long, rigid, left / right	14.1 m	2863266
			Endless	Standard	Smooth	Pre-screen conveyor, long, rigid, left / right	14.1 m	2582476
			Zip Clip	Standard	Smooth	Prescreen conveyor, long, rigid	12.9 m	2902873
			Endless	Standard	Smooth	Pre-screen conveyor, folding, left / right	12.9 m	2861804
			Zip Clip	Standard	Cleated belt	Return conveyor, 500 mm	23.3 m	3125485

Original KLEEMANN

CONVEYOR UNIT

CONVEYOR BELTS								
Series code	Serial code	Series range	Version	Variant	Conveyor belt type	Belt conveyor	Conveyor length	Part no.
MR 130 PRO	K125	1 - 9999	Endless	Standard	Cleated belt	Return conveyor, 500 mm	23.2 m	2885748
			Zip Clip reinforced	Heavy duty	Cleated belt	Permanent magnet separator	5.6 m	3140587
			Zip Clip	Standard	Cleated belt	Permanent magnet separator	5.6 m	3140581
			Endless	Standard	Cleated belt	Permanent magnet separator	5.6 m	3127855
			Zip Clip	Standard	Cleated belt	Medium grain conveyor	14.4 m	3125472
			Endless	Standard	Cleated belt	Medium grain conveyor	14.4 m	2883446
			Zip Clip	Standard	Cleated belt	Electromagnetic separator	5.5 m	3140870
			Zip Clip reinforced	Heavy duty	Cleated belt	Electromagnetic separator	5.5 m	3140869
			Endless	Standard	Cleated belt	Electromagnetic separator	5.5 m	3062900
			Zip Clip reinforced	Heavy duty	Smooth	Crusher discharge conveyor, standard	25.1 m	3038486
			Endless	Standard	Smooth	Crusher discharge conveyor, standard	25.1 m	2892988
			Zip Clip	Standard	Smooth	Fine grain conveyor	25.1 m	2884287
			Zip Clip	Standard	Smooth	Transfer conveyor	4.2 m	2849132
	K124	1 - 9999	Zip Clip	Standard	Cleated belt	Electromagnetic separator	1 m	3140870

CONVEYOR BELTS

Series code	Serial code	Series range	Version	Variant	Conveyor belt type	Belt conveyor	Conveyor length	Part no.
MR 130 PRO	K124	1 - 9999	Zip Clip	Standard	Smooth	Fine grain conveyor	25.1 m	2884287
			Endless	Standard	Smooth	Pre-screen conveyor, folding, left / right	12.9 m	2861804
			Zip Clip	Standard	Cleated belt	Return conveyor, 500 mm	23.3 m	3125485
			Endless	Standard	Cleated belt	Return conveyor, 500 mm	23.2 m	2885748
			Zip Clip reinforced	Heavy duty	Cleated belt	Permanent magnet separator	0.7 m	3140587
			Zip Clip	Standard	Cleated belt	Permanent magnet separator	0.7 m	3140581
			Endless	Standard	Cleated belt	Permanent magnet separator	0.7 m	3127855
			Zip Clip	Standard	Cleated belt	Medium grain conveyor	14.4 m	3125472
			Endless	Standard	Cleated belt	Medium grain conveyor	14.4 m	2883446
			Zip Clip	Standard	Smooth	Fine grain conveyor	18 m	3125488
			Endless	Standard	Cleated belt	Electromagnetic separator	5.5 m	3062900
			Zip Clip reinforced	Heavy duty	Smooth	Crusher discharge conveyor, standard	25.1 m	3038486
			Endless	Standard	Smooth	Crusher discharge conveyor, standard	25.1 m	2892988
			Zip Clip	Standard	Smooth	Transfer conveyor	4.2 m	2849132
			Endless	Standard	Smooth	Transfer conveyor	4.2 m	F20014607

Original KLEEMANN

CONVEYOR UNIT

CONVEYOR BELTS								
Series code	Serial code	Series range	Version	Variant	Conveyor belt type	Belt conveyor	Conveyor length	Part no.
MR 130 PRO	K124	1 - 9999	Zip Clip	Standard	Smooth	Pre-screen conveyor, long, rigid, left / right	14.1 m	2863266
			Endless	Standard	Smooth	Pre-screen conveyor, long, rigid, left / right	14.1 m	2582476
			Zip Clip	Standard	Smooth	Prescreen conveyor, long, rigid	12.9 m	2902873
			Zip Clip reinforced	Heavy duty	Cleated belt	Electromagnetic separator	1 m	3140869
MBT 20	K131	1 - 9999	Zip Clip	Standard	Smooth/reinforced	Main discharge conveyor	39.5 m	WX3171818
			Zip Clip	Standard	Cleated belt	Main discharge conveyor	39.5 m	WX3171807
			Endless	Standard	Smooth	Main discharge conveyor	395 m	3023055
			Endless, reinforced	Heavy duty	Smooth/reinforced	Main discharge conveyor	39.5 m	3042929
			Endless	Standard	Cleated belt	Main discharge conveyor	39.5 m	3042849
			Zip Clip	Standard	Smooth	Main discharge conveyor	39.5 m	WX3171802
MBT 24	K133	1 - 9999	Zip Clip	Standard	Smooth/reinforced	Main discharge conveyor	46.2 m	WX3171819
			Zip Clip	Standard	Cleated belt	Main discharge conveyor	46.2 m	WX3171811
			Endless	Standard	Smooth	Main discharge conveyor	46.2 m	3023127

CONVEYOR BELTS

Series code	Serial code	Series range	Version	Variant	Conveyor belt type	Belt conveyor	Conveyor length	Part no.
MBT 24	K133	1 - 9999	Endless, reinforced	Heavy duty	Smooth/reinforced	Main discharge conveyor	46.2 m	3042931
			Endless	Standard	Cleated belt	Main discharge conveyor	46.2 m	3042850
			Zip Clip	Standard	Smooth	Main discharge conveyor	46.2 m	WX3171806
	K134	1 - 9999	Endless, reinforced	Heavy duty	Smooth/reinforced	Main discharge conveyor	46.2 m	3042931
			Endless	Standard	Smooth	Main discharge conveyor	46.2 m	3023127
			Endless	Standard	Cleated belt	Main discharge conveyor	46.2 m	3042850
MS 15 Z	K047	200 - 9999	Zip Clip	Standard	Smooth	Fine grain conveyor	16.1 m	2884287
		200 - 9999	Zip Clip	Standard	Smooth	Side conveyor, fine grain	16.1 m	2983210
			Zip Clip	Standard	Smooth	Fine grain conveyor	9.7 m	2992037
			Zip Clip	Standard	Cleated belt	Main discharge conveyor	11.8 m	2850276
			Endless	Standard	Smooth	Side conveyor, fine grain	16.1 m	WX3221567
			Endless	Standard	Smooth	Fine grain conveyor	16.1 m	WX3221528
			Zip Clip	Standard	Cleated belt	Side conveyor, medium grain	16.1 m	3060491
			Zip Clip	Standard	Smooth	Chute discharge conveyor, short	10 m	2850280

Original KLEEMANN

CONVEYOR UNIT

CONVEYOR BELTS								
Series code	Serial code	Series range	Version	Variant	Conveyor belt type	Belt conveyor	Conveyor length	Part no.
MS 15 Z	K047	200 - 9999	Endless	Standard	Smooth	Chute discharge conveyor, short	10 m	WX3221524
			Endless	Standard	Cleated belt	Main discharge conveyor	11.8 m	2274517
							15.1 m	
							15.1 m	
							15.1 m	
MSS 802 EVO	K102	1 - 9999	Zip Clip	Standard	Cleated belt / reinforced	Permanent magnet separator	4.6 m	WX3174814
			Endless	Standard	Cleated belt	Side conveyor, medium grain, long	18.4 m	2746448
			Endless	Standard	Cleated belt	Side conveyor, medium grain, telescopic	18.4 m	2670262
			Endless	Standard	Smooth	Fine grain conveyor	9.6 m	2670353
			Zip Clip	Standard	Smooth	Fine grain conveyor	9.6 m	2924073
			Zip Clip	Standard	Smooth	Side conveyor, fine grain, long	18.4 m	2924080
			Zip Clip	Standard	Smooth	Side conveyor, fine grain, telescopic	18.4 m	2924082
		1 - 9999	Zip Clip	Standard	Cleated belt	Main discharge conveyor, standard	13 m	2924084
			Zip Clip	Standard	Cleated belt	Main discharge conveyor, extended	15.9 m	2924086
		1 - 9999	Zip Clip	Standard	Cleated belt	Side conveyor, medium grain, long	18.4 m	2924088

CONVEYOR BELTS

Series code	Serial code	Series range	Version	Variant	Conveyor belt type	Belt conveyor	Conveyor length	Part no.
MSS 802 EVO	K102	1 - 9999	Zip Clip	Standard	Cleated belt	Side conveyor, medium grain, telescopic	18.4 m	2924091
			Zip Clip	Standard	Smooth	Hopper discharge conveyor	10 m	2924093
			Endless	Standard	Cleated belt	Permanent magnet separator	4.7 m	2452708
			Endless	Standard	Smooth	Side conveyor, fine grain, long	18.4 m	2746248
			Endless	Standard	Smooth	Side conveyor, fine grain, telescopic	18.4 m	2670360
		1 - 9999	Endless	Standard	Cleated belt	Main discharge conveyor, extended	15.9 m	2670376
		1 - 9999	Endless	Standard	Smooth	Hopper discharge conveyor	10 m	2724468
		1 - 9999	Endless	Standard	Cleated belt	Main discharge conveyor, standard	13 m	2738993
MC 110 EVO	K117	1 - 9999	Endless, reinforced	Heavy duty	Smooth	Crusher discharge conveyor, folding, extended	23 m	2814449
			Zip Clip reinforced	Heavy duty	Smooth - Toughflex Epp	Crusher discharge conveyor, folding, extended	23 m	2978496
			Zip Clip reinforced	Heavy duty	Smooth - Toughflex Epp	Crusher discharge conveyor, standard	20 m	2978498
			Endless	Standard	Cleated belt	Electromagnetic separator	4.5 m	2323184

Original KLEEMANN

CONVEYOR UNIT

CONVEYOR BELTS								
Series code	Serial code	Series range	Version	Variant	Conveyor belt type	Belt conveyor	Conveyor length	Part no.
MC 110 EVO	K117	1 - 9999	Zip Clip reinforced	Heavy duty	Smooth	Crusher discharge conveyor, folding, extended	23 m	2915418
			Zip Clip	Standard	Smooth	Crusher discharge conveyor, standard	20 m	2915437
			Zip Clip reinforced	Heavy duty	Cleated belt	Electromagnetic separator	4.5 m	2915543
			Zip Clip	Standard	Cleated belt	Electromagnetic separator	4.5 m	2915578
			Zip Clip	Standard	Smooth	Pre-screen conveyor, short, rigid, left / right	6.1 m	2902875
			Zip Clip	Standard	Smooth	Pre-screen conveyor, folding, left / right	10.7 m	2902876
			Endless, reinforced	Heavy duty	Smooth - Toughflex Epp	Crusher discharge conveyor, folding, extended	23 m	2845542
			Endless, reinforced	Heavy duty	Smooth - Toughflex Epp	Crusher discharge conveyor, standard	20 m	2845553
			Endless	Standard	Smooth	Crusher discharge conveyor, standard	20 m	2757762
			Endless	Standard	Smooth	Pre-screen conveyor, short, rigid, left / right	6.1 m	2226095
			Endless	Standard	Smooth	Pre-screen conveyor, folding, left / right	10.7 m	2262332
MR 100 NEO	K136	1 - 9999	Zip Clip	Standard	Smooth	Prescreen conveyor, right, folding	8.5 m	3123428

CONVEYOR BELTS								
Series code	Serial code	Series range	Version	Variant	Conveyor belt type	Belt conveyor	Conveyor length	Part no.
MR 100 NEO	K136	1 - 9999	Zip Clip	Standard	Cleated belt	Return conveyor, 500 mm	15.5 m	3123558
			Endless	Standard	Smooth	Fine grain conveyor	9.1 m	3022592
			Zip Clip	Standard	Smooth	Complete fine grain conveyor	9.1 m	3123426
			Zip Clip	Standard	Smooth	Transfer conveyor	3.8 m	2849098
			Endless	Standard	Smooth	Transfer conveyor	3.8 m	F20014794
			Endless	Standard	Smooth	Prescreen conveyor, right, folding	8.5 m	3073267
			Endless	Standard	Cleated belt	Return conveyor, 500 mm	15.5 m	3054222
			Endless, reinforced	Endless, reinforced	Smooth	Crusher discharge conveyor, standard	17.2 m	3042682

Original KLEEMANN

SCREENING

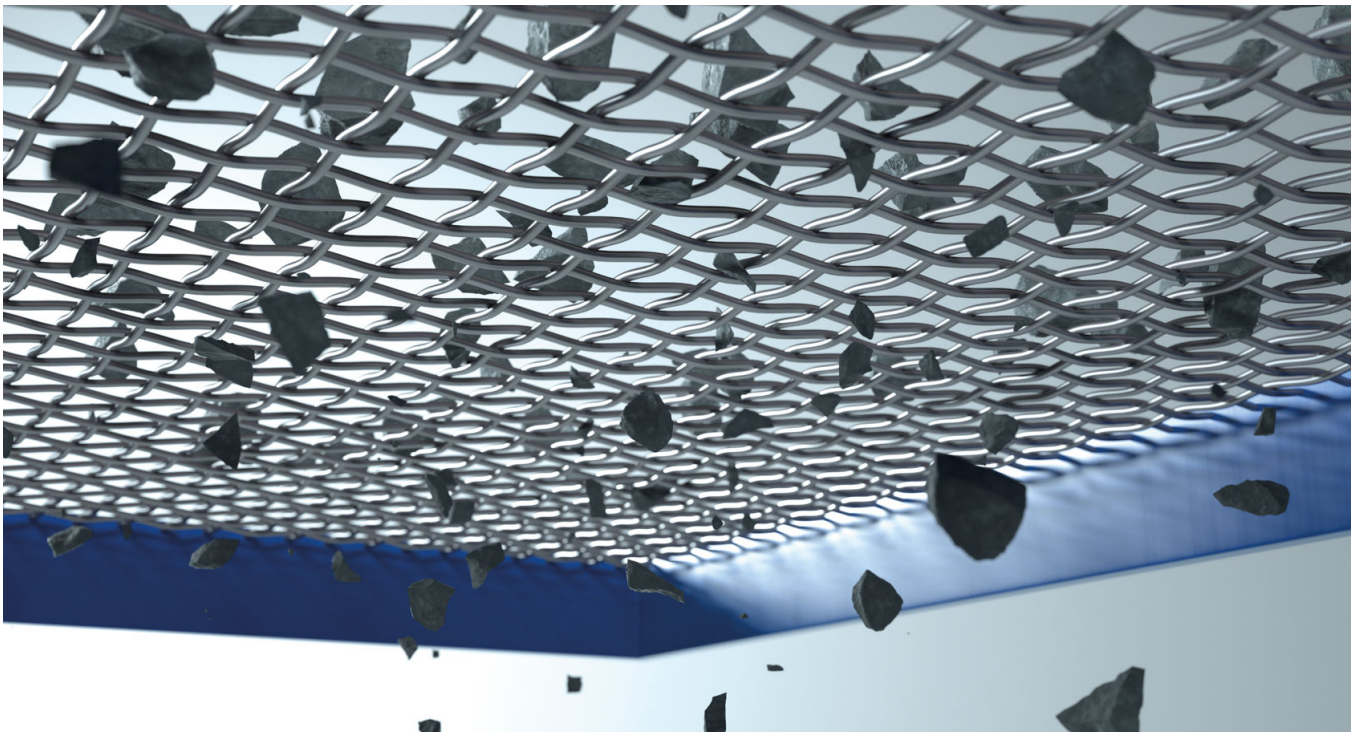

Genuine screen linings from KLEEMANN precisely screen out both coarse grains and fines to reduce wear within the crusher and ensure that the final product is of significantly higher quality. Prescreens and grate chutes are primarily responsible for removing the fines from the supplied material. With the help of a secondary screening unit, a defined grain size can be screened out by selecting the required screen configuration. Coarse grains or crushed material that does not correspond to the final grain size is either discharged to the side or reintroduced into the crushing process. Genuine KLEEMANN screen linings stand out due to their perfect fit and can be delivered in all common sizes within a very short time.

> Read more online

WIRE MESH

Screen linings are put to a tough test in everyday use. In order to permanently and reliably ensure that material is screened to the desired final grain size, KLEEMANN uses screen linings made of special wear-resistant stainless steel spring wire or round wires.

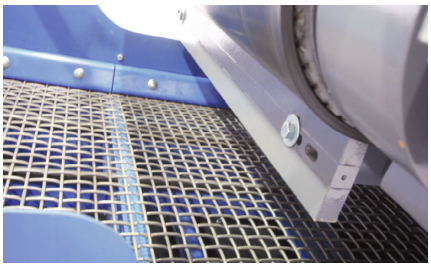

WIRE MESH										
Series code	Serial code	Series range	Part	Version	Clear mesh size	Deck	Posi-tion	Wire dia-meter	Re-quire-ment	Part no.
MC 100 EVO	K002, K011	1 - 9999	Dummy cover	for pre-screening units		Lower deck			1 pc.	2339284
		2 - 9999	QM-GRADE 10 rect-angular mesh	for pre-screening units	10 mm	Lower deck		4 mm	1 pc.	2291445
			QM-GRADE 12 rect-angular mesh	for pre-screening units	12 mm	Lower deck		4 mm	1 pc.	2339205
			QM-GRADE 15 rect-angular mesh	for pre-screening units	15 mm	Lower deck		4 mm	1 pc.	2339206
			QM-GRADE 18 rect-angular mesh	for pre-screening units	18 mm	Lower deck		4 mm	1 pc.	2339207
			QM-GRADE 20 rect-angular mesh	for pre-screening units	20 mm	Lower deck		5 mm	1 pc.	2339208
			QM-GRADE 25 rect-angular mesh	for pre-screening units	25 mm	Lower deck		6 mm	1 pc.	2291447

WIRE MESH										
Series code	Serial code	Series range	Part	Version	Clear mesh size	Deck	Posi-tion	Wire dia-meter	Re-quire-ment	Part no.
MC 100 EVO	K002, K011	2 - 9999	QM-GRADE 30 rect-angular mesh	for pre-screening units	30 mm	Lower deck		8 mm	1 pc.	2339209
			QM-GRADE 35 rect-angular mesh	for pre-screening units	35 mm	Lower deck		8 mm	1 pc.	2291449
			QM-GRADE 40 rect-angular mesh	for pre-screening units	40 mm	Lower deck		8 mm	1 pc.	2339210
			QM-GRADE 45 rect-angular mesh	for pre-screening units	45 mm	Lower deck		8 mm	1 pc.	2339211
			QM-GRADE 50 rect-angular mesh	for pre-screening units	50 mm	Lower deck		10 mm	1 pc.	2339212
			QM-GRADE 55 rect-angular mesh	for pre-screening units	55 mm	Lower deck		10 mm	1 pc.	2339213
MC 110 R EVO	K005	1 - 9999	Dummy rubber	for pre-screening units		Lower deck			1 pc.	WX3225247
			QM-GRADE 10 rect-angular mesh	for pre-screening units	10 mm	Lower deck		4 mm	1 pc.	2298547
			QM-GRADE 12 rect-angular mesh	for pre-screening units	12 mm	Lower deck		4 mm	1 pc.	2298549

WIRE MESH

Series code	Serial code	Series range	Part	Version	Clear mesh size	Deck	Position	Wire diameter	Requirement	Part no.
MC 110 R EVO	K005	1 - 9999	QM-GRADE 15 rectangular mesh	for pre-screening units	15 mm	Lower deck		4 mm	1 pc.	2298550
			QM-GRADE 18 rectangular mesh	for pre-screening units	18 mm	Lower deck		4 mm	1 pc.	2298551
			QM-GRADE 20 rectangular mesh	for pre-screening units	20 mm	Lower deck		5 mm	1 pc.	2298552
			QM-GRADE 22 rectangular mesh	for pre-screening units	22 mm	Lower deck		6 mm	1 pc.	2617143
			QM-GRADE 25 rectangular mesh	for pre-screening units	25 mm	Lower deck		6 mm	1 pc.	2298554
			QM-GRADE 30 rectangular mesh	for pre-screening units	30 mm	Lower deck		8 mm	1 pc.	2298555
			QM-GRADE 35 rectangular mesh	for pre-screening units	35 mm	Lower deck		8 mm	1 pc.	2298556
			QM-GRADE 40 rectangular mesh	for pre-screening units	40 mm	Lower deck		8 mm	1 pc.	2298557

WIRE MESH										
Series code	Serial code	Series range	Part	Version	Clear mesh size	Deck	Position	Wire diameter	Requirement	Part no.
MC 110 R EVO	K005	1 - 9999	QM-GRADE 45 rectangular mesh	for pre-screening units	45 mm	Lower deck		8 mm	1 pc.	2298558
			QM-GRADE 50 rectangular mesh	for pre-screening units	50 mm	Lower deck		10 mm	1 pc.	2298559
			QM-GRADE 55 rectangular mesh	for pre-screening units	55 mm	Lower deck		10 mm	1 pc.	2298560
			QM-GRADE 60 rectangular mesh	for pre-screening units	60 mm	Lower deck		10 mm	1 pc.	2607436
MC 110 Ri EVO	K014	1 - 9999	Dummy rubber	for pre-screening units		Lower deck			1 pc.	WX3225247
			QM-GRADE 10 rectangular mesh	for pre-screening units	10 mm	Lower deck		4 mm	1 pc.	2298547
			QM-GRADE 12 rectangular mesh	for pre-screening units	12 mm	Lower deck		4 mm	1 pc.	2298549
			QM-GRADE 15 rectangular mesh	for pre-screening units	15 mm	Lower deck		4 mm	1 pc.	2298550
			QM-GRADE 18 rectangular mesh	for pre-screening units	18 mm	Lower deck		4 mm	1 pc.	2298551

WIRE MESH

Series code	Serial code	Series range	Part	Version	Clear mesh size	Deck	Position	Wire diameter	Requirement	Part no.
MC 110 Ri EVO	K014	1 - 9999	QM-GRADE 20 rectangular mesh	for pre-screening units	20 mm	Lower deck		5 mm	1 pc.	2298552
			QM-GRADE 22 rectangular mesh	for pre-screening units	22 mm	Lower deck		6 mm	1 pc.	2617143
			QM-GRADE 25 rectangular mesh	for pre-screening units	25 mm	Lower deck		6 mm	1 pc.	2298554
			QM-GRADE 30 rectangular mesh	for pre-screening units	30 mm	Lower deck		8 mm	1 pc.	2298555
			QM-GRADE 35 rectangular mesh	for pre-screening units	35 mm	Lower deck		8 mm	1 pc.	2298556
			QM-GRADE 40 rectangular mesh	for pre-screening units	40 mm	Lower deck		8 mm	1 pc.	2298557
			QM-GRADE 45 rectangular mesh	for pre-screening units	45 mm	Lower deck		8 mm	1 pc.	2298558
			QM-GRADE 50 rectangular mesh	for pre-screening units	50 mm	Lower deck		10 mm	1 pc.	2298559

WIRE MESH										
Series code	Serial code	Series range	Part	Version	Clear mesh size	Deck	Position	Wire diameter	Requirement	Part no.
MC 110 Ri EVO	K014	1 - 9999	QM-GRADE 55 rectangular mesh	for pre-screening units	55 mm	Lower deck		10 mm	1 pc.	2298560
			QM-GRADE 60 rectangular mesh	for pre-screening units	60 mm	Lower deck		10 mm	1 pc.	2607436
MC 110 Z	K004	1 - 9999	Dummy rubber	for pre-screening units		Lower deck			1 pc.	F20003969
			CMS 65 rectangular mesh	for secondary screening units	65 mm	Upper deck - NSE	Screen section, large	10 mm	2 pc.	M20000148
			QM-GRADE 10 rectangular mesh	for pre-screening units	10 mm	Lower deck		4 mm	1 pc.	M20001709
			QM-GRADE 15 rectangular mesh	for pre-screening units	15 mm	Lower deck		4 mm	1 pc.	M20001344
			QM-GRADE 18 rectangular mesh	for secondary screening units	18 mm	Upper deck - NSE	Screen section, large	4 mm	2 pc.	2194538
				for pre-screening units	18 mm	Lower deck		4 mm	1 pc.	M20001398
			QM-GRADE 20 rectangular mesh	for pre-screening units	20 mm	Lower deck		5 mm	1 pc.	M20001376

WIRE MESH										
Series code	Serial code	Series range	Part	Version	Clear mesh size	Deck	Position	Wire diameter	Requirement	Part no.
MC 110 Z	K004	1 - 9999	QM-GRADE 22 rectangular mesh	for pre-screening units	22 mm	Lower deck		6 mm	1 pc.	2410151
				for secondary screening units	22 mm	Upper deck - NSE	Screen section, large	5 mm	2 pc.	M10017783
			QM-GRADE 25 rectangular mesh	for secondary screening units	25 mm	Upper deck - NSE	Screen section, large	6 mm	2 pc.	M10021718
				for pre-screening units	25 mm	Lower deck		6 mm	1 pc.	M20000800
			QM-GRADE 28 rectangular mesh	for pre-screening units	28 mm	Lower deck		6 mm	1 pc.	2217706
				for secondary screening units	28 mm	Upper deck - NSE	Screen section, large	7 mm	2 pc.	M20001153
			QM-GRADE 30 rectangular mesh	for secondary screening units	30 mm	Upper deck - NSE	Screen section, large	8 mm	2 pc.	2234804
				for pre-screening units	30 mm	Lower deck		8 mm	1 pc.	M20001522
			QM-GRADE 32 rectangular mesh	for pre-screening units	32 mm	Lower deck		8 mm	1 pc.	M20000632
			QM-GRADE 35 rectangular mesh	for secondary screening units	35 mm	Upper deck - NSE	Screen section, large	8 mm	2 pc.	M20000147
				for pre-screening units	35 mm	Lower deck		8 mm	1 pc.	M20000315

WIRE MESH										
Series code	Serial code	Series range	Part	Version	Clear mesh size	Deck	Position	Wire diameter	Requirement	Part no.
MC 110 Z	K004	1 - 9999	QM-GRADE 40 rectangular mesh	for pre-screening units	40 mm	Lower deck		8 mm	1 pc.	M20000373
				for secondary screening units	40 mm	Upper deck - NSE	Screen section, large	8 mm	2 pc.	M20000377
			QM-GRADE 45 rectangular mesh	for pre-screening units	45 mm	Lower deck		8 mm	1 pc.	M20000393
				for secondary screening units	45 mm	Upper deck - NSE	Screen section, large	8 mm	2 pc.	M10017736
			QM-GRADE 50 rectangular mesh	for pre-screening units	50 mm	Lower deck		10 mm	1 pc.	2234812
				for secondary screening units	50 mm	Upper deck - NSE	Screen section, large	10 mm	2 pc.	M20000799
			QM-GRADE 55 rectangular mesh	for secondary screening units	55 mm	Upper deck - NSE	Screen section, large	10 mm	2 pc.	M20000666
			QM-GRADE 60 rectangular mesh	for secondary screening units	60 mm	Upper deck - NSE	Screen section, large	10 mm	2 pc.	M20000273
			QM-GRADE 70 rectangular mesh	for secondary screening units	70 mm	Upper deck - NSE	Screen section, large	10 mm	2 pc.	2607304
			QM-GRADE 80 rectangular mesh	for secondary screening units	80 mm	Upper deck - NSE	Screen section, large	10 mm	2 pc.	M20000898

WIRE MESH										
Series code	Serial code	Series range	Part	Version	Clear mesh size	Deck	Position	Wire diameter	Requirement	Part no.
MC 110 Z	K004	1 - 9999	QM-GRADE 90 rectangular mesh	for secondary screening units	90 mm	Upper deck - NSE	Screen section, large	10 mm	2 pc.	2432813
MC 110 Z EVO	K006	1 - 9999	Dummy rubber	for pre-screening units		Lower deck			1 pc.	WX3225247
			QM-GRADE 10 rectangular mesh	for pre-screening units	10 mm	Lower deck		4 mm	1 pc.	2298547
			QM-GRADE 12 rectangular mesh	for pre-screening units	12 mm	Lower deck		4 mm	1 pc.	2298549
			QM-GRADE 15 rectangular mesh	for pre-screening units	15 mm	Lower deck		4 mm	1 pc.	2298550
			QM-GRADE 18 rectangular mesh	for pre-screening units	18 mm	Lower deck		4 mm	1 pc.	2298551
			QM-GRADE 20 rectangular mesh	for pre-screening units	20 mm	Lower deck		5 mm	1 pc.	2298552
			QM-GRADE 22 rectangular mesh	for pre-screening units	22 mm	Lower deck		6 mm	1 pc.	2617143
			QM-GRADE 25 rectangular mesh	for pre-screening units	25 mm	Lower deck		6 mm	1 pc.	2298554

WIRE MESH										
Series code	Serial code	Series range	Part	Version	Clear mesh size	Deck	Posi-tion	Wire dia-meter	Re-quire-ment	Part no.
MC 110 Z EVO	K006	1 - 9999	QM-GRADE 30 rect-angular mesh	for pre-screening units	30 mm	Lower deck		8 mm	1 pc.	2298555
			QM-GRADE 35 rect-angular mesh	for pre-screening units	35 mm	Lower deck		8 mm	1 pc.	2298556
			QM-GRADE 40 rect-angular mesh	for pre-screening units	40 mm	Lower deck		8 mm	1 pc.	2298557
			QM-GRADE 45 rect-angular mesh	for pre-screening units	45 mm	Lower deck		8 mm	1 pc.	2298558
			QM-GRADE 50 rect-angular mesh	for pre-screening units	50 mm	Lower deck		10 mm	1 pc.	2298559
			QM-GRADE 55 rect-angular mesh	for pre-screening units	55 mm	Lower deck		10 mm	1 pc.	2298560
			QM-GRADE 60 rect-angular mesh	for pre-screening units	60 mm	Lower deck		10 mm	1 pc.	2607436
MC 110 R	K003	1 - 9999	Dummy rubber	for pre-screening units		Lower deck			1 pc.	F20006960
			QM-GRADE 15 rect-angular mesh	for pre-screening units	15 mm	Lower deck		4 mm	1 pc.	2232158

WIRE MESH

Series code	Serial code	Series range	Part	Version	Clear mesh size	Deck	Position	Wire diameter	Requirement	Part no.
MC 110 R	K003	1 - 9999	QM-GRADE 18 rectangular mesh	for pre-screening units	18 mm	Lower deck		4 mm	1 pc.	2232159
			QM-GRADE 20 rectangular mesh	for pre-screening units	20 mm	Lower deck		6 mm	1 pc.	2220614
			QM-GRADE 25 rectangular mesh	for pre-screening units	25 mm	Lower deck		6 mm	1 pc.	M20000541
			QM-GRADE 30 rectangular mesh	for pre-screening units	30 mm	Lower deck		6 mm	1 pc.	2224928
			QM-GRADE 35 rectangular mesh	for pre-screening units	35 mm	Lower deck		8 mm	1 pc.	M20000543
			QM-GRADE 40 rectangular mesh	for pre-screening units	40 mm	Lower deck		8 mm	1 pc.	2232160
			QM-GRADE 45 rectangular mesh	for pre-screening units	45 mm	Lower deck		8 mm	1 pc.	2329434
			QM-GRADE 50 rectangular mesh	for pre-screening units	50 mm	Lower deck		10 mm	1 pc.	2329435
		200 - 9999	CMS 65 rectangular mesh	for secondary screening units	65 mm	Upper deck - NSE	Screen section, large	10 mm	2 pc.	M20000148

WIRE MESH										
Series code	Serial code	Series range	Part	Version	Clear mesh size	Deck	Position	Wire diameter	Requirement	Part no.
MC 110 R	K003	200 - 9999	QM-GRADE 13 rectangular mesh	for pre-screening units	13 mm	Upper deck - NSE	Screen section, large	4 mm	2 pc.	M20001152
			QM-GRADE 18 rectangular mesh	for secondary screening units	18 mm	Upper deck - NSE	Screen section, large	4 mm	2 pc.	2194538
			QM-GRADE 20 rectangular mesh	for pre-screening units	20 mm	Upper deck - NSE	Screen section, large	5 mm	2 pc.	M20000146
			QM-GRADE 22 rectangular mesh	for secondary screening units	22 mm	Upper deck - NSE	Screen section, large	5 mm	2 pc.	M10017783
			QM-GRADE 25 rectangular mesh	for secondary screening units	25 mm	Upper deck - NSE	Screen section, large	6 mm	2 pc.	M10021718
			QM-GRADE 28 rectangular mesh	for secondary screening units	28 mm	Upper deck - NSE	Screen section, large	7 mm	2 pc.	M20001153
			QM-GRADE 30 rectangular mesh	for secondary screening units	30 mm	Upper deck - NSE	Screen section, large	8 mm	2 pc.	2234804
			QM-GRADE 35 rectangular mesh	for secondary screening units	35 mm	Upper deck - NSE	Screen section, large	8 mm	2 pc.	M20000147

WIRE MESH										
Series code	Serial code	Series range	Part	Version	Clear mesh size	Deck	Position	Wire diameter	Requirement	Part no.
MC 110 R	K003	200 - 9999	QM-GRADE 40 rectangular mesh	for secondary screening units	40 mm	Upper deck - NSE	Screen section, large	8 mm	2 pc.	M20000377
			QM-GRADE 45 rectangular mesh	for secondary screening units	45 mm	Upper deck - NSE	Screen section, large	8 mm	2 pc.	M10017736
			QM-GRADE 50 rectangular mesh	for secondary screening units	50 mm	Upper deck - NSE	Screen section, large	10 mm	2 pc.	M20000799
			QM-GRADE 55 rectangular mesh	for secondary screening units	55 mm	Upper deck - NSE	Screen section, large	10 mm	2 pc.	M20000666
			QM-GRADE 60 rectangular mesh	for secondary screening units	60 mm	Upper deck - NSE	Screen section, large	10 mm	2 pc.	M20000273
			QM-GRADE 70 rectangular mesh	for secondary screening units	70 mm	Upper deck - NSE	Screen section, large	10 mm	2 pc.	2607304
			QM-GRADE 80 rectangular mesh	for secondary screening units	80 mm	Upper deck - NSE	Screen section, large	10 mm	2 pc.	M20000898
			QM-GRADE 90 rectangular mesh	for secondary screening units	90 mm	Upper deck - NSE	Screen section, large	10 mm	2 pc.	2432813
MC 110 Zi EVO	K015	1 - 9999	Dummy rubber	for pre-screening units		Lower deck			1 pc.	WX3225247

WIRE MESH										
Series code	Serial code	Series range	Part	Version	Clear mesh size	Deck	Posi-tion	Wire dia-meter	Re-quire-ment	Part no.
MC 110 Zi EVO	K015	1 - 9999	QM-GRADE 10 rect-angular mesh	for pre-screening units	10 mm	Lower deck		4 mm	1 pc.	2298547
			QM-GRADE 12 rect-angular mesh	for pre-screening units	12 mm	Lower deck		4 mm	1 pc.	2298549
			QM-GRADE 15 rect-angular mesh	for pre-screening units	15 mm	Lower deck		4 mm	1 pc.	2298550
			QM-GRADE 18 rect-angular mesh	for pre-screening units	18 mm	Lower deck		4 mm	1 pc.	2298551
			QM-GRADE 20 rect-angular mesh	for pre-screening units	20 mm	Lower deck		5 mm	1 pc.	2298552
			QM-GRADE 22 rect-angular mesh	for pre-screening units	22 mm	Lower deck		6 mm	1 pc.	2617143
			QM-GRADE 25 rect-angular mesh	for pre-screening units	25 mm	Lower deck		6 mm	1 pc.	2298554
			QM-GRADE 30 rect-angular mesh	for pre-screening units	30 mm	Lower deck		8 mm	1 pc.	2298555

WIRE MESH										
Series code	Serial code	Series range	Part	Version	Clear mesh size	Deck	Posi-tion	Wire dia-meter	Re-quire-ment	Part no.
MC 110 Zi EVO	K015	1 - 9999	QM-GRADE 35 rect-angular mesh	for pre-screening units	35 mm	Lower deck		8 mm	1 pc.	2298556
			QM-GRADE 40 rect-angular mesh	for pre-screening units	40 mm	Lower deck		8 mm	1 pc.	2298557
			QM-GRADE 45 rect-angular mesh	for pre-screening units	45 mm	Lower deck		8 mm	1 pc.	2298558
			QM-GRADE 50 rect-angular mesh	for pre-screening units	50 mm	Lower deck		10 mm	1 pc.	2298559
			QM-GRADE 55 rect-angular mesh	for pre-screening units	55 mm	Lower deck		10 mm	1 pc.	2298560
			QM-GRADE 60 rect-angular mesh	for pre-screening units	60 mm	Lower deck		10 mm	1 pc.	2607436
MC 120 Z	K007	1 - 9999	Dummy rubber	for pre-screening units		Lower deck			1 pc.	F10285544
			QM-GRADE 10 rect-angular mesh	for pre-screening units	10 mm	Lower deck		4 mm	1 pc.	M10010237
			QM-GRADE 12 rect-angular mesh	for pre-screening units	12 mm	Lower deck		4 mm	1 pc.	2234790

WIRE MESH										
Series code	Serial code	Series range	Part	Version	Clear mesh size	Deck	Posi-tion	Wire dia-meter	Re-quire-ment	Part no.
MC 120 Z	K007	1 - 9999	QM-GRADE 15 rect-angular mesh	for pre-screening units	15 mm	Lower deck		4 mm	1 pc.	M10013885
			QM-GRADE 16 rect-angular mesh	for pre-screening units	16 mm	Lower deck		4 mm	1 pc.	M10007592
			QM-GRADE 18 rect-angular mesh	for pre-screening units	18 mm	Lower deck		4 mm	1 pc.	M10007005
			QM-GRADE 20 rect-angular mesh	for pre-screening units	20 mm	Lower deck		5 mm	1 pc.	M10007905
			QM-GRADE 22 rect-angular mesh	for pre-screening units	22 mm	Lower deck		6 mm	1 pc.	M10005821
			QM-GRADE 25 rect-angular mesh	for pre-screening units	25 mm	Lower deck		6 mm	1 pc.	M10010004
			QM-GRADE 28 rect-angular mesh	for pre-screening units	28 mm	Lower deck		6.3 mm	1 pc.	M10009743
			QM-GRADE 30 rect-angular mesh	for pre-screening units	30 mm	Lower deck		8 mm	1 pc.	M20000033

WIRE MESH

Series code	Serial code	Series range	Part	Version	Clear mesh size	Deck	Position	Wire diameter	Requirement	Part no.
MC 120 Z	K007	1 - 9999	QM-GRADE 32 rectangular mesh	for pre-screening units	32 mm	Lower deck		8 mm	1 pc.	M10008122
			QM-GRADE 35 rectangular mesh	for pre-screening units	35 mm	Lower deck		8 mm	1 pc.	M10004739
			QM-GRADE 40 rectangular mesh	for pre-screening units	40 mm	Lower deck		8 mm	1 pc.	M10004738
			QM-GRADE 45 rectangular mesh	for pre-screening units	45 mm	Lower deck		8 mm	1 pc.	M10006092
			QM-GRADE 50 rectangular mesh	for pre-screening units	50 mm	Lower deck		10 mm	1 pc.	M10012445
			QM-GRADE 55 rectangular mesh	for pre-screening units	55 mm	Lower deck		10 mm	1 pc.	M10016328
			QM-GRADE 60 rectangular mesh	for pre-screening units	60 mm	Lower deck		10 mm	1 pc.	M20000339
			QM-GRADE 65 rectangular mesh	for pre-screening units	65 mm	Lower deck		10 mm	1 pc.	M20000040

WIRE MESH										
Series code	Serial code	Series range	Part	Version	Clear mesh size	Deck	Posi-tion	Wire dia-meter	Re-quire-ment	Part no.
MC 120 Z	K007	1 - 9999	QM-GRADE 8 rect-angular mesh	for pre-screening units	8 mm	Lower deck		4 mm	1 pc.	M20000952
MC 120 PRO	K034	1 - 6	Dummy rubber	for pre-screening units		Lower deck			2 pc.	2600174
			QM-GRADE 20 rect-angular mesh	for pre-screening units	20 mm	Lower deck		8 mm	2 pc.	2581129
			QM-GRADE 25 rect-angular mesh	for pre-screening units	25 mm	Lower deck		8 mm	2 pc.	2581128
			QM-GRADE 30 rect-angular mesh	for pre-screening units	30 mm	Lower deck		10 mm	2 pc.	2581127
			QM-GRADE 35 rect-angular mesh	for pre-screening units	35 mm	Lower deck		10 mm	2 pc.	2581126
			QM-GRADE 40 rect-angular mesh	for pre-screening units	40 mm	Lower deck		12.5 mm	2 pc.	2581125
			QM-GRADE 45 rect-angular mesh	for pre-screening units	45 mm	Lower deck		12.5 mm	2 pc.	2581124
			QM-GRADE 50 rect-angular mesh	for pre-screening units	50 mm	Lower deck		12.2 mm	2 pc.	2581122

WIRE MESH

Series code	Serial code	Series range	Part	Version	Clear mesh size	Deck	Position	Wire diameter	Requirement	Part no.
MC 120 PRO	K034	7 - 9999	Dummy rubber	for pre-screening units		Lower deck			2 pc.	2633441
			QM-GRADE 20 rectangular mesh	for pre-screening units	20 mm	Lower deck		8 mm	2 pc.	2601987
			QM-GRADE 25 rectangular mesh	for pre-screening units	25 mm	Lower deck		8 mm	2 pc.	2601985
			QM-GRADE 30 rectangular mesh	for pre-screening units	30 mm	Lower deck		10 mm	2 pc.	2601983
			QM-GRADE 35 rectangular mesh	for pre-screening units	35 mm	Lower deck		10 mm	2 pc.	2601982
			QM-GRADE 40 rectangular mesh	for pre-screening units	40 mm	Lower deck		12.5 mm	2 pc.	2601976
			QM-GRADE 45 rectangular mesh	for pre-screening units	45 mm	Lower deck		12.5 mm	2 pc.	2601959
			QM-GRADE 50 rectangular mesh	for pre-screening units	50 mm	Lower deck		12.2 mm	2 pc.	2601957
	K035	1 - 1	Dummy rubber	for pre-screening units		Lower deck			2 pc.	2600174

WIRE MESH										
Series code	Serial code	Series range	Part	Version	Clear mesh size	Deck	Posi-tion	Wire dia-meter	Re-quire-ment	Part no.
MC 120 PRO	K035	1 - 1	QM-GRADE 20 rect-angular mesh	for pre-screening units	20 mm	Lower deck		8 mm	2 pc.	2581129
			QM-GRADE 25 rect-angular mesh	for pre-screening units	25 mm	Lower deck		8 mm	2 pc.	2581128
			QM-GRADE 30 rect-angular mesh	for pre-screening units	30 mm	Lower deck		10 mm	2 pc.	2581127
			QM-GRADE 35 rect-angular mesh	for pre-screening units	35 mm	Lower deck		10 mm	2 pc.	2581126
			QM-GRADE 40 rect-angular mesh	for pre-screening units	40 mm	Lower deck		12.5 mm	2 pc.	2581125
			QM-GRADE 45 rect-angular mesh	for pre-screening units	45 mm	Lower deck		12.5 mm	2 pc.	2581124
			QM-GRADE 50 rect-angular mesh	for pre-screening units	50 mm	Lower deck		12.2 mm	2 pc.	2581122
		2 - 9999	Dummy rubber	for pre-screening units		Lower deck			2 pc.	2633441
			QM-GRADE 20 rect-angular mesh	for pre-screening units	20 mm	Lower deck		8 mm	2 pc.	2601987

WIRE MESH

Series code	Serial code	Series range	Part	Version	Clear mesh size	Deck	Position	Wire diameter	Requirement	Part no.
MC 120 PRO	K035	2 - 9999	QM-GRADE 25 rectangular mesh	for pre-screening units	25 mm	Lower deck		8 mm	2 pc.	2601985
			QM-GRADE 30 rectangular mesh	for pre-screening units	30 mm	Lower deck		10 mm	2 pc.	2601983
			QM-GRADE 35 rectangular mesh	for pre-screening units	35 mm	Lower deck		10 mm	2 pc.	2601982
			QM-GRADE 40 rectangular mesh	for pre-screening units	40 mm	Lower deck		12.5 mm	2 pc.	2601976
			QM-GRADE 45 rectangular mesh	for pre-screening units	45 mm	Lower deck		12.5 mm	2 pc.	2601959
			QM-GRADE 50 rectangular mesh	for pre-screening units	50 mm	Lower deck		12.2 mm	2 pc.	2601957
MCO 9S EVO	K074	1 - 9999	QM-GRADE 10 rectangular mesh	for secondary screening units	10 mm	Upper deck	Screen section, large	4 mm	4 pc.	2234836
				for secondary screening units	10 mm	Upper deck	Screen section, small	4 mm	1 pc.	2234837
			QM-GRADE 12 rectangular mesh	for secondary screening units	12 mm	Upper deck - NSE	Screen section, small	4 mm	1 pc.	M20001523
				for secondary screening units	12 mm	Upper deck - NSE	Screen section, large	4 mm	4 pc.	M20001524

WIRE MESH										
Series code	Serial code	Series range	Part	Version	Clear mesh size	Deck	Position	Wire diameter	Requirement	Part no.
MCO 9S EVO	K074	1 - 9999	QM-GRADE 15 rectangular mesh	for secondary screening units	15 mm	Upper deck	Screen section, small	4 mm	1 pc.	M20001534
				for secondary screening units	15 mm	Upper deck	Screen section, large	4 mm	4 pc.	M20001533
			QM-GRADE 16 rectangular mesh	for secondary screening units	16 mm	Upper deck	Screen section, small	4 mm	1 pc.	2220305
				for secondary screening units	16 mm	Upper deck	Screen section, large	4 mm	4 pc.	2220306
			QM-GRADE 18 rectangular mesh	for secondary screening units	18 mm	Upper deck	Screen section, large	5 mm	4 pc.	2395288
				for secondary screening units	18 mm	Upper deck	Screen section, small	5 mm	1 pc.	2395289
			QM-GRADE 20 rectangular mesh	for secondary screening units	20 mm	Upper deck	Screen section, large	5 mm	4 pc.	2234861
				for secondary screening units	20 mm	Upper deck	Screen section, small	5 mm	1 pc.	2234862
			QM-GRADE 22 rectangular mesh	for secondary screening units	22 mm	Upper deck	Screen section, large	6 mm	4 pc.	2292815
				for secondary screening units	22 mm	Upper deck	Screen section, small	6 mm	1 pc.	2292816
			QM-GRADE 25 rectangular mesh	for secondary screening units	25 mm	Upper deck	Screen section, large	6 mm	4 pc.	M20001411
				for secondary screening units	25 mm	Upper deck	Screen section, small	6 mm	1 pc.	M20001410

WIRE MESH										
Series code	Serial code	Series range	Part	Version	Clear mesh size	Deck	Position	Wire diameter	Requirement	Part no.
MCO 9S EVO	K074	1 - 9999	QM-GRADE 28 rectangular mesh	for secondary screening units	28 mm	Upper deck	Screen section, large	6 mm	4 pc.	M20001532
				for secondary screening units	28 mm	Upper deck	Screen section, small	6 mm	1 pc.	M20001531
			QM-GRADE 30 rectangular mesh	for secondary screening units	30 mm	Upper deck	Screen section, large	8 mm	4 pc.	2234867
				for secondary screening units	30 mm	Upper deck	Screen section, small	8 mm	1 pc.	2234871
			QM-GRADE 32 rectangular mesh	for secondary screening units	32 mm	Upper deck	Screen section, large	6 mm	4 pc.	2292821
				for secondary screening units	32 mm	Upper deck	Screen section, small	6 mm	1 pc.	2292822
			QM-GRADE 35 rectangular mesh	for secondary screening units	35 mm	Upper deck	Screen section, small	8 mm	1 pc.	2234880
				for secondary screening units	35 mm	Upper deck	Screen section, large	8 mm	4 pc.	2234878
			QM-GRADE 40 rectangular mesh	for secondary screening units	40 mm	Upper deck	Screen section, large	8 mm	4 pc.	M20001405
				for secondary screening units	40 mm	Upper deck	Screen section, small	8 mm	1 pc.	M20001404
			QM-GRADE 45 rectangular mesh	for secondary screening units	45 mm	Upper deck	Screen section, small	8 mm	1 pc.	M20001639
				for secondary screening units	45 mm	Upper deck	Screen section, large	8 mm	4 pc.	M20001640

WIRE MESH										
Series code	Serial code	Series range	Part	Version	Clear mesh size	Deck	Position	Wire diameter	Requirement	Part no.
MCO 9S EVO	K074	1 - 9999	QM-GRADE 50 rectangular mesh	for secondary screening units	50 mm	Upper deck	Screen section, large	10 mm	4 pc.	M20001370
				for secondary screening units	50 mm	Upper deck	Screen section, small	10 mm	1 pc.	M20001369
			QM-GRADE 55 rectangular mesh	for secondary screening units	55 mm	Upper deck	Screen section, small	10 mm	1 pc.	M20001579
				for secondary screening units	55 mm	Upper deck	Screen section, large	10 mm	4 pc.	M20001571
			QM-GRADE 60 rectangular mesh	for secondary screening units	60 mm	Upper deck	Screen section, small	10 mm	1 pc.	M20001715
				for secondary screening units	60 mm	Upper deck	Screen section, large	10 mm	4 pc.	M20001716
			QM-GRADE 65 rectangular mesh	for secondary screening units	65 mm	Upper deck	Screen section, large	10 mm	4 pc.	M20001529
				for secondary screening units	65 mm	Upper deck	Screen section, small	10 mm	1 pc.	M20001530
			QM-GRADE 70 rectangular mesh	for secondary screening units	70 mm	Upper deck	Screen section, small	10 mm	1 pc.	M20001679
				for secondary screening units	70 mm	Upper deck	Screen section, large	10 mm	4 pc.	M20001678
			QM-GRADE 8 rectangular mesh	for secondary screening units	8 mm	Upper deck	Screen section, small	3 mm	1 pc.	2632147
				for secondary screening units	8 mm	Upper deck	Screen section, large	3 mm	4 pc.	2632145

WIRE MESH										
Series code	Serial code	Series range	Part	Version	Clear mesh size	Deck	Position	Wire diameter	Requirement	Part no.
MCO 9S EVO	K074	1 - 9999	QM-GRADE 80 rectangular mesh	for secondary screening units	80 mm	Upper deck	Screen section, large	10 mm	4 pc.	2202449
				for secondary screening units	80 mm	Upper deck	Screen section, small	10 mm	1 pc.	2202450
			QM-GRADE 90 rectangular mesh	for secondary screening units	90 mm	Upper deck	Screen section, small	10 mm	1 pc.	2200098
				for secondary screening units	90 mm	Upper deck	Screen section, large	10 mm	4 pc.	2200097
MCO 9Si EVO	K075	1 - 9999	QM-GRADE 10 rectangular mesh	for secondary screening units	10 mm	Upper deck	Screen section, large	4 mm	4 pc.	2234836
				for secondary screening units	10 mm	Upper deck	Screen section, small	4 mm	1 pc.	2234837
			QM-GRADE 12 rectangular mesh	for secondary screening units	12 mm	Upper deck - NSE	Screen section, small	4 mm	1 pc.	M20001523
				for secondary screening units	12 mm	Upper deck - NSE	Screen section, large	4 mm	4 pc.	M20001524
			QM-GRADE 15 rectangular mesh	for secondary screening units	15 mm	Upper deck	Screen section, large	4 mm	4 pc.	M20001533
				for secondary screening units	15 mm	Upper deck	Screen section, small	4 mm	1 pc.	M20001534
			QM-GRADE 16 rectangular mesh	for secondary screening units	16 mm	Upper deck	Screen section, large	4 mm	4 pc.	2220306
				for secondary screening units	16 mm	Upper deck	Screen section, small	4 mm	1 pc.	2220305

WIRE MESH										
Series code	Serial code	Series range	Part	Version	Clear mesh size	Deck	Position	Wire diameter	Requirement	Part no.
MCO 9Si EVO	K075	1 - 9999	QM-GRADE 18 rectangular mesh	for secondary screening units	18 mm	Upper deck	Screen section, large	5 mm	4 pc.	2395288
				for secondary screening units	18 mm	Upper deck	Screen section, small	5 mm	1 pc.	2395289
			QM-GRADE 20 rectangular mesh	for secondary screening units	20 mm	Upper deck	Screen section, large	5 mm	4 pc.	2234861
				for secondary screening units	20 mm	Upper deck	Screen section, small	5 mm	1 pc.	2234862
			QM-GRADE 22 rectangular mesh	for secondary screening units	22 mm	Upper deck	Screen section, large	6 mm	4 pc.	2292815
				for secondary screening units	22 mm	Upper deck	Screen section, small	6 mm	1 pc.	2292816
			QM-GRADE 25 rectangular mesh	for secondary screening units	25 mm	Upper deck	Screen section, small	6 mm	1 pc.	M20001410
				for secondary screening units	25 mm	Upper deck	Screen section, large	6 mm	4 pc.	M20001411
			QM-GRADE 28 rectangular mesh	for secondary screening units	28 mm	Upper deck	Screen section, small	6 mm	1 pc.	M20001531
				for secondary screening units	28 mm	Upper deck	Screen section, large	6 mm	4 pc.	M20001532
			QM-GRADE 30 rectangular mesh	for secondary screening units	30 mm	Upper deck	Screen section, small	8 mm	1 pc.	2234871
				for secondary screening units	30 mm	Upper deck	Screen section, large	8 mm	4 pc.	2234867

WIRE MESH										
Series code	Serial code	Series range	Part	Version	Clear mesh size	Deck	Position	Wire diameter	Requirement	Part no.
MCO 9Si EVO	K075	1 - 9999	QM-GRADE 32 rectangular mesh	for secondary screening units	32 mm	Upper deck	Screen section, small	6 mm	1 pc.	2292822
				for secondary screening units	32 mm	Upper deck	Screen section, large	6 mm	4 pc.	2292821
			QM-GRADE 35 rectangular mesh	for secondary screening units	35 mm	Upper deck	Screen section, small	8 mm	1 pc.	2234880
				for secondary screening units	35 mm	Upper deck	Screen section, large	8 mm	4 pc.	2234878
			QM-GRADE 40 rectangular mesh	for secondary screening units	40 mm	Upper deck	Screen section, small	8 mm	1 pc.	M20001404
				for secondary screening units	40 mm	Upper deck	Screen section, large	8 mm	4 pc.	M20001405
			QM-GRADE 45 rectangular mesh	for secondary screening units	45 mm	Upper deck	Screen section, small	8 mm	1 pc.	M20001639
				for secondary screening units	45 mm	Upper deck	Screen section, large	8 mm	4 pc.	M20001640
			QM-GRADE 50 rectangular mesh	for secondary screening units	50 mm	Upper deck	Screen section, large	10 mm	4 pc.	M20001370
				for secondary screening units	50 mm	Upper deck	Screen section, small	10 mm	1 pc.	M20001369
			QM-GRADE 55 rectangular mesh	for secondary screening units	55 mm	Upper deck	Screen section, large	10 mm	4 pc.	M20001571
				for secondary screening units	55 mm	Upper deck	Screen section, small	10 mm	1 pc.	M20001579

WIRE MESH										
Series code	Serial code	Series range	Part	Version	Clear mesh size	Deck	Position	Wire diameter	Requirement	Part no.
MCO 9Si EVO	K075	1 - 9999	QM-GRADE 60 rectangular mesh	for secondary screening units	60 mm	Upper deck	Screen section, large	10 mm	4 pc.	M20001716
				for secondary screening units	60 mm	Upper deck	Screen section, small	10 mm	1 pc.	M20001715
			QM-GRADE 65 rectangular mesh	for secondary screening units	65 mm	Upper deck	Screen section, small	10 mm	1 pc.	M20001530
				for secondary screening units	65 mm	Upper deck	Screen section, large	10 mm	4 pc.	M20001529
			QM-GRADE 70 rectangular mesh	for secondary screening units	70 mm	Upper deck	Screen section, large	10 mm	4 pc.	M20001678
				for secondary screening units	70 mm	Upper deck	Screen section, small	10 mm	1 pc.	M20001679
			QM-GRADE 8 rectangular mesh	for secondary screening units	8 mm	Upper deck	Screen section, large	3 mm	4 pc.	2632145
				for secondary screening units	8 mm	Upper deck	Screen section, small	3 mm	1 pc.	2632147
			QM-GRADE 80 rectangular mesh	for secondary screening units	80 mm	Upper deck	Screen section, small	10 mm	1 pc.	2202450
				for secondary screening units	80 mm	Upper deck	Screen section, large	10 mm	4 pc.	2202449
			QM-GRADE 90 rectangular mesh	for secondary screening units	90 mm	Upper deck	Screen section, large	10 mm	4 pc.	2200097
				for secondary screening units	90 mm	Upper deck	Screen section, small	10 mm	1 pc.	2200098
MR 100 Z	K013	1 - 9999	CMS 65 rectangular mesh	for secondary screening units	65 mm	Upper deck - NSE	Screen section, large	10 mm	2 pc.	M20000148

WIRE MESH

Series code	Serial code	Series range	Part	Version	Clear mesh size	Deck	Position	Wire diameter	Requirement	Part no.
MR 100 Z	K013	1 - 9999	QM-GRADE 18 rectangular mesh	for secondary screening units	18 mm	Upper deck - NSE	Screen section, large	4 mm	2 pc.	2194538
			QM-GRADE 22 rectangular mesh	for secondary screening units	22 mm	Upper deck - NSE	Screen section, large	5 mm	2 pc.	M10017783
			QM-GRADE 25 rectangular mesh	for secondary screening units	25 mm	Upper deck - NSE	Screen section, large	6 mm	2 pc.	M10021718
			QM-GRADE 28 rectangular mesh	for secondary screening units	28 mm	Upper deck - NSE	Screen section, large	7 mm	2 pc.	M20001153
			QM-GRADE 30 rectangular mesh	for secondary screening units	30 mm	Upper deck - NSE	Screen section, large	8 mm	2 pc.	2234804
			QM-GRADE 35 rectangular mesh	for secondary screening units	35 mm	Upper deck - NSE	Screen section, large	8 mm	2 pc.	M20000147
			QM-GRADE 40 rectangular mesh	for secondary screening units	40 mm	Upper deck - NSE	Screen section, large	8 mm	2 pc.	M20000377
			QM-GRADE 45 rectangular mesh	for secondary screening units	45 mm	Upper deck - NSE	Screen section, large	8 mm	2 pc.	M10017736

WIRE MESH										
Series code	Serial code	Series range	Part	Version	Clear mesh size	Deck	Position	Wire diameter	Requirement	Part no.
MR 100 Z	K013	1 - 9999	QM-GRADE 50 rectangular mesh	for secondary screening units	50 mm	Upper deck - NSE	Screen section, large	10 mm	2 pc.	M20000799
			QM-GRADE 55 rectangular mesh	for secondary screening units	55 mm	Upper deck - NSE	Screen section, large	10 mm	2 pc.	M20000666
			QM-GRADE 60 rectangular mesh	for secondary screening units	60 mm	Upper deck - NSE	Screen section, large	10 mm	2 pc.	M20000273
			QM-GRADE 70 rectangular mesh	for secondary screening units	70 mm	Upper deck - NSE	Screen section, large	10 mm	2 pc.	2607304
			QM-GRADE 80 rectangular mesh	for secondary screening units	80 mm	Upper deck - NSE	Screen section, large	10 mm	2 pc.	M20000898
			QM-GRADE 90 rectangular mesh	for secondary screening units	90 mm	Upper deck - NSE	Screen section, large	10 mm	2 pc.	2432813
		10 - 9999	Rubber screen	for pre-screening units		Lower deck			1 pc.	F10410144
			CMS 8 rectangular mesh	for pre-screening units	8 mm	Lower deck		3 mm	1 pc.	M20000705
			QM-GRADE 10 rectangular mesh	for pre-screening units	10 mm	Lower deck		2 mm	1 pc.	M20001179

WIRE MESH

Series code	Serial code	Series range	Part	Version	Clear mesh size	Deck	Position	Wire diameter	Requirement	Part no.
MR 100 Z	K013	10 - 9999	QM-GRADE 12 rectangular mesh	for pre-screening units	12 mm	Lower deck		3 mm	1 pc.	M10021509
			QM-GRADE 20 rectangular mesh	for pre-screening units	20 mm	Lower deck		5 mm	1 pc.	M20000325
			QM-GRADE 25 rectangular mesh	for pre-screening units	25 mm	Lower deck		6 mm	1 pc.	M20000350
			QM-GRADE 30 rectangular mesh	for pre-screening units	30 mm	Lower deck		6 mm	1 pc.	M20001142
			QM-GRADE 32 rectangular mesh	for pre-screening units	32 mm	Lower deck		6 mm	1 pc.	2289634
			QM-GRADE 35 rectangular mesh	for pre-screening units	35 mm	Lower deck		8 mm	1 pc.	M10016665
			QM-GRADE 40 rectangular mesh	for pre-screening units	40 mm	Lower deck		6 mm	1 pc.	2289635
MR 110 R EVO	K016	1 - 9999	Dummy rubber	for pre-screening units		Lower deck			1 pc.	F20006960
			QM-GRADE 15 rectangular mesh	for pre-screening units	15 mm	Lower deck		4 mm	1 pc.	2232158

WIRE MESH										
Series code	Serial code	Series range	Part	Version	Clear mesh size	Deck	Posi-tion	Wire dia-meter	Re-quire-ment	Part no.
MR 110 R EVO	K016	1 - 9999	QM-GRADE 18 rect-angular mesh	for pre-screening units	18 mm	Lower deck		4 mm	1 pc.	2232159
			QM-GRADE 20 rect-angular mesh	for pre-screening units	20 mm	Lower deck		6 mm	1 pc.	2220614
			QM-GRADE 25 rect-angular mesh	for pre-screening units	25 mm	Lower deck		6 mm	1 pc.	M20000541
			QM-GRADE 30 rect-angular mesh	for pre-screening units	30 mm	Lower deck		6 mm	1 pc.	2224928
			QM-GRADE 35 rect-angular mesh	for pre-screening units	35 mm	Lower deck		8 mm	1 pc.	M20000543
			QM-GRADE 40 rect-angular mesh	for pre-screening units	40 mm	Lower deck		8 mm	1 pc.	2232160
			QM-GRADE 45 rect-angular mesh	for pre-screening units	45 mm	Lower deck		8 mm	1 pc.	2329434
			QM-GRADE 50 rect-angular mesh	for pre-screening units	50 mm	Lower deck		10 mm	1 pc.	2329435
MR 110 Z EVO	K017	2 - 9999	Dummy rubber	for pre-screening units		Lower deck			1 pc.	F20003969

WIRE MESH										
Series code	Serial code	Series range	Part	Version	Clear mesh size	Deck	Position	Wire diameter	Requirement	Part no.
MR 110 Z EVO	K017	2 - 9999	QM-GRADE 10 rectangular mesh	for secondary screening units	10 mm	Upper deck - NSE	Screen section, large	4 mm	4 pc.	2234836
				for pre-screening units	10 mm	Lower deck		4 mm	1 pc.	M20001709
				for secondary screening units	10 mm	Upper deck - NSE	Screen section, small	4 mm	1 pc.	2234837
			QM-GRADE 12 rectangular mesh	for secondary screening units	12 mm	Upper deck - NSE	Screen section, small	4 mm	1 pc.	M20001523
				for secondary screening units	12 mm	Upper deck - NSE	Screen section, large	4 mm	4 pc.	M20001524
			QM-GRADE 15 rectangular mesh	for pre-screening units	15 mm	Lower deck		4 mm	1 pc.	M20001344
				for secondary screening units	15 mm	Upper deck - NSE	Screen section, small	4 mm	1 pc.	M20001534
				for secondary screening units	15 mm	Upper deck - NSE	Screen section, large	4 mm	4 pc.	M20001533
			QM-GRADE 16 rectangular mesh	for secondary screening units	16 mm	Upper deck - NSE	Screen section, large	4 mm	4 pc.	2220306
				for secondary screening units	16 mm	Upper deck - NSE	Screen section, small	4 mm	1 pc.	2220305
			QM-GRADE 18 rectangular mesh	for secondary screening units	18 mm	Upper deck - NSE	Screen section, large	5 mm	4 pc.	2395288
				for secondary screening units	18 mm	Upper deck - NSE	Screen section, small	5 mm	1 pc.	2395289
				for pre-screening units	18 mm	Lower deck		4 mm	1 pc.	M20001398

WIRE MESH										
Series code	Serial code	Series range	Part	Version	Clear mesh size	Deck	Position	Wire diameter	Requirement	Part no.
MR 110 Z EVO	K017	2 - 9999	QM-GRADE 20 rectangular mesh	for secondary screening units	20 mm	Upper deck - NSE	Screen section, large	5 mm	4 pc.	2234861
				for secondary screening units	20 mm	Upper deck - NSE	Screen section, small	5 mm	1 pc.	2234862
				for pre-screening units	20 mm	Lower deck		5 mm	1 pc.	M20001376
			QM-GRADE 22 rectangular mesh	for secondary screening units	22 mm	Upper deck - NSE	Screen section, small	6 mm	1 pc.	2292816
				for secondary screening units	22 mm	Upper deck - NSE	Screen section, large	6 mm	4 pc.	2292815
				for pre-screening units	22 mm	Lower deck		6 mm	1 pc.	2410151
			QM-GRADE 25 rectangular mesh	for secondary screening units	25 mm	Upper deck - NSE	Screen section, large	6 mm	4 pc.	M20001411
				for pre-screening units	25 mm	Lower deck		6 mm	1 pc.	M20000800
				for secondary screening units	25 mm	Upper deck - NSE	Screen section, small	6 mm	1 pc.	M20001410
			QM-GRADE 28 rectangular mesh	for pre-screening units	28 mm	Lower deck		6 mm	1 pc.	2217706
				for secondary screening units	28 mm	Upper deck - NSE	Screen section, large	6 mm	4 pc.	M20001532
				for secondary screening units	28 mm	Upper deck - NSE	Screen section, small	6 mm	1 pc.	M20001531

WIRE MESH										
Series code	Serial code	Series range	Part	Version	Clear mesh size	Deck	Position	Wire diameter	Requirement	Part no.
MR 110 Z EVO	K017	2 - 9999	QM-GRADE 30 rectangular mesh	for pre-screening units	30 mm	Lower deck		8 mm	1 pc.	M20001522
				for secondary screening units	30 mm	Upper deck - NSE	Screen section, large	8 mm	4 pc.	2234867
				for secondary screening units	30 mm	Upper deck - NSE	Screen section, small	8 mm	1 pc.	2234871
			QM-GRADE 32 rectangular mesh	for pre-screening units	32 mm	Lower deck		8 mm	1 pc.	M20000632
				for secondary screening units	32 mm	Upper deck - NSE	Screen section, small	6 mm	1 pc.	2292822
				for secondary screening units	32 mm	Upper deck - NSE	Screen section, large	6 mm	4 pc.	2292821
			QM-GRADE 35 rectangular mesh	for pre-screening units	35 mm	Lower deck		8 mm	1 pc.	M20000315
				for secondary screening units	35 mm	Upper deck - NSE	Screen section, small	8 mm	1 pc.	2234880
				for secondary screening units	35 mm	Upper deck - NSE	Screen section, large	8 mm	4 pc.	2234878
			QM-GRADE 40 rectangular mesh	for pre-screening units	40 mm	Lower deck		8 mm	1 pc.	M20000373
				for secondary screening units	40 mm	Upper deck - NSE	Screen section, large	8 mm	4 pc.	M20001405
				for secondary screening units	40 mm	Upper deck - NSE	Screen section, small	8 mm	1 pc.	M20001404

WIRE MESH										
Series code	Serial code	Series range	Part	Version	Clear mesh size	Deck	Position	Wire diameter	Requirement	Part no.
MR 110 Z EVO	K017	2 - 9999	QM-GRADE 45 rectangular mesh	for secondary screening units	45 mm	Upper deck - NSE	Screen section, large	8 mm	4 pc.	M20001640
				for pre-screening units	45 mm	Lower deck		8 mm	1 pc.	M20000393
				for secondary screening units	45 mm	Upper deck - NSE	Screen section, small	8 mm	1 pc.	M20001639
			QM-GRADE 50 rectangular mesh	for pre-screening units	50 mm	Lower deck		10 mm	1 pc.	2234812
				for secondary screening units	50 mm	Upper deck - NSE	Screen section, large	10 mm	4 pc.	M20001370
				for secondary screening units	50 mm	Upper deck - NSE	Screen section, small	10 mm	1 pc.	M20001369
			QM-GRADE 55 rectangular mesh	for pre-screening units	55 mm	Lower deck		8 mm	1 pc.	M20001548
				for secondary screening units	55 mm	Upper deck - NSE	Screen section, large	10 mm	4 pc.	M20001571
				for secondary screening units	55 mm	Upper deck - NSE	Screen section, small	10 mm	1 pc.	M20001579
			QM-GRADE 60 rectangular mesh	for secondary screening units	60 mm	Upper deck - NSE	Screen section, small	10 mm	1 pc.	M20001715
				for secondary screening units	60 mm	Upper deck - NSE	Screen section, large	10 mm	4 pc.	M20001716
			QM-GRADE 65 rectangular mesh	for secondary screening units	65 mm	Upper deck - NSE	Screen section, small	10 mm	1 pc.	M20001530
				for secondary screening units	65 mm	Upper deck - NSE	Screen section, large	10 mm	4 pc.	M20001529

WIRE MESH

Series code	Serial code	Series range	Part	Version	Clear mesh size	Deck	Position	Wire diameter	Requirement	Part no.
MR 110 Z EVO	K017	2 - 9999	QM-GRADE 70 rectangular mesh	for secondary screening units	70 mm	Upper deck - NSE	Screen section, small	10 mm	1 pc.	M20001679
				for secondary screening units	70 mm	Upper deck - NSE	Screen section, large	10 mm	4 pc.	M20001678
			QM-GRADE 8 rectangular mesh	for secondary screening units	8 mm	Upper deck - NSE	Screen section, small	3 mm	1 pc.	2632147
				for secondary screening units	8 mm	Upper deck - NSE	Screen section, large	3 mm	4 pc.	2632145
			QM-GRADE 80 rectangular mesh	for secondary screening units	80 mm	Upper deck - NSE	Screen section, large	10 mm	4 pc.	2202449
				for secondary screening units	80 mm	Upper deck - NSE	Screen section, small	10 mm	1 pc.	2202450
			QM-GRADE 90 rectangular mesh	for secondary screening units	90 mm	Upper deck - NSE	Screen section, small	10 mm	1 pc.	2200098
				for secondary screening units	90 mm	Upper deck - NSE	Screen section, large	10 mm	4 pc.	2200097
MR 110 EVO	K018	1 - 9999	Dummy rubber	for pre-screening units		Lower deck			1 pc.	WX3225246
			QM-GRADE 10 rectangular mesh	for pre-screening units	10 mm	Lower deck		4 mm	1 pc.	2335436
				for secondary screening units	10 mm	Upper deck - NSE	Screen section, large	4 mm	4 pc.	2234836
				for secondary screening units	10 mm	Upper deck - NSE	Screen section, small	4 mm	1 pc.	2234837

WIRE MESH										
Series code	Serial code	Series range	Part	Version	Clear mesh size	Deck	Position	Wire diameter	Requirement	Part no.
MR 110 EVO	K018	1 - 9999	QM-GRADE 12 rectangular mesh	for secondary screening units	12 mm	Upper deck - NSE	Screen section, large	4 mm	4 pc.	M20001524
				for secondary screening units	12 mm	Upper deck - NSE	Screen section, small	4 mm	1 pc.	M20001523
				for prescreening units	12 mm	Lower deck		4 mm	1 pc.	2335438
			QM-GRADE 15 rectangular mesh	for prescreening units	15 mm	Lower deck		4 mm	1 pc.	2335441
				for secondary screening units	15 mm	Upper deck - NSE	Screen section, small	4 mm	1 pc.	M20001534
				for secondary screening units	15 mm	Upper deck - NSE	Screen section, large	4 mm	4 pc.	M20001533
			QM-GRADE 16 rectangular mesh	for secondary screening units	16 mm	Upper deck - NSE	Screen section, small	4 mm	1 pc.	2220305
				for secondary screening units	16 mm	Upper deck - NSE	Screen section, large	4 mm	4 pc.	2220306
			QM-GRADE 18 rectangular mesh	for secondary screening units	18 mm	Upper deck - NSE	Screen section, small	5 mm	1 pc.	2395289
				for secondary screening units	18 mm	Upper deck - NSE	Screen section, large	5 mm	4 pc.	2395288
			QM-GRADE 20 rectangular mesh	for secondary screening units	20 mm	Upper deck - NSE	Screen section, small	5 mm	1 pc.	2234862
				for secondary screening units	20 mm	Upper deck - NSE	Screen section, large	5 mm	4 pc.	2234861
				for prescreening units	20 mm	Lower deck		5 mm	1 pc.	2335444

WIRE MESH										
Series code	Serial code	Series range	Part	Version	Clear mesh size	Deck	Position	Wire diameter	Requirement	Part no.
MR 110 EVO	K018	1 - 9999	QM-GRADE 22 rectangular mesh	for secondary screening units	22 mm	Upper deck - NSE	Screen section, small	6 mm	1 pc.	2292816
				for secondary screening units	22 mm	Upper deck - NSE	Screen section, large	6 mm	4 pc.	2292815
			QM-GRADE 25 rectangular mesh	for secondary screening units	25 mm	Upper deck - NSE	Screen section, large	6 mm	4 pc.	M20001411
				for secondary screening units	25 mm	Upper deck - NSE	Screen section, small	6 mm	1 pc.	M20001410
				for pre-screening units	25 mm	Lower deck		6 mm	1 pc.	2335446
			QM-GRADE 28 rectangular mesh	for secondary screening units	28 mm	Upper deck - NSE	Screen section, small	6 mm	1 pc.	M20001531
				for secondary screening units	28 mm	Upper deck - NSE	Screen section, large	6 mm	4 pc.	M20001532
			QM-GRADE 30 rectangular mesh	for pre-screening units	30 mm	Lower deck		7 mm	1 pc.	2335448
				for secondary screening units	30 mm	Upper deck - NSE	Screen section, small	8 mm	1 pc.	2234871
				for secondary screening units	30 mm	Upper deck - NSE	Screen section, large	8 mm	4 pc.	2234867
			QM-GRADE 32 rectangular mesh	for pre-screening units	32 mm	Lower deck		8 mm	1 pc.	2335450
				for secondary screening units	32 mm	Upper deck - NSE	Screen section, small	6 mm	1 pc.	2292822
				for secondary screening units	32 mm	Upper deck - NSE	Screen section, large	6 mm	4 pc.	2292821

WIRE MESH										
Series code	Serial code	Series range	Part	Version	Clear mesh size	Deck	Position	Wire diameter	Requirement	Part no.
MR 110 EVO	K018	1 - 9999	QM-GRADE 35 rectangular mesh	for pre-screening units	35 mm	Lower deck		8 mm	1 pc.	2335453
				for secondary screening units	35 mm	Upper deck - NSE	Screen section, large	8 mm	4 pc.	2234878
				for secondary screening units	35 mm	Upper deck - NSE	Screen section, small	8 mm	1 pc.	2234880
			QM-GRADE 40 rectangular mesh	for secondary screening units	40 mm	Upper deck - NSE	Screen section, small	8 mm	1 pc.	M20001404
				for secondary screening units	40 mm	Upper deck - NSE	Screen section, large	8 mm	4 pc.	M20001405
				for pre-screening units	40 mm	Lower deck		8 mm	1 pc.	2335455
			QM-GRADE 45 rectangular mesh	for pre-screening units	45 mm	Lower deck		8 mm	1 pc.	2335457
				for secondary screening units	45 mm	Upper deck - NSE	Screen section, large	8 mm	4 pc.	M20001640
				for secondary screening units	45 mm	Upper deck - NSE	Screen section, small	8 mm	1 pc.	M20001639
			QM-GRADE 50 rectangular mesh	for secondary screening units	50 mm	Upper deck - NSE	Screen section, large	10 mm	4 pc.	M20001370
				for secondary screening units	50 mm	Upper deck - NSE	Screen section, small	10 mm	1 pc.	M20001369
				for pre-screening units	50 mm	Lower deck		8 mm	1 pc.	2335459

WIRE MESH										
Series code	Serial code	Series range	Part	Version	Clear mesh size	Deck	Position	Wire diameter	Requirement	Part no.
MR 110 EVO	K018	1 - 9999	QM-GRADE 55 rectangular mesh	for secondary screening units	55 mm	Upper deck - NSE	Screen section, large	10 mm	4 pc.	M20001571
				for secondary screening units	55 mm	Upper deck - NSE	Screen section, small	10 mm	1 pc.	M20001579
				for pre-screening units	55 mm	Lower deck		8 mm	1 pc.	2335461
			QM-GRADE 60 rectangular mesh	for secondary screening units	60 mm	Upper deck - NSE	Screen section, large	10 mm	4 pc.	M20001716
				for secondary screening units	60 mm	Upper deck - NSE	Screen section, small	10 mm	1 pc.	M20001715
			QM-GRADE 65 rectangular mesh	for secondary screening units	65 mm	Upper deck - NSE	Screen section, small	10 mm	1 pc.	M20001530
				for secondary screening units	65 mm	Upper deck - NSE	Screen section, large	10 mm	4 pc.	M20001529
			QM-GRADE 70 rectangular mesh	for secondary screening units	70 mm	Upper deck - NSE	Screen section, small	10 mm	1 pc.	M20001679
				for secondary screening units	70 mm	Upper deck - NSE	Screen section, large	10 mm	4 pc.	M20001678
			QM-GRADE 8 rectangular mesh	for secondary screening units	8 mm	Upper deck - NSE	Screen section, large	3 mm	4 pc.	2632145
				for secondary screening units	8 mm	Upper deck - NSE	Screen section, small	3 mm	1 pc.	2632147
			QM-GRADE 80 rectangular mesh	for secondary screening units	80 mm	Upper deck - NSE	Screen section, small	10 mm	1 pc.	2202450
				for secondary screening units	80 mm	Upper deck - NSE	Screen section, large	10 mm	4 pc.	2202449

WIRE MESH										
Series code	Serial code	Series range	Part	Version	Clear mesh size	Deck	Position	Wire diameter	Requirement	Part no.
MR 110 EVO	K018	1 - 9999	QM-GRADE 90 rectangular mesh	for secondary screening units	90 mm	Upper deck - NSE	Screen section, large	10 mm	4 pc.	2200097
				for secondary screening units	90 mm	Upper deck - NSE	Screen section, small	10 mm	1 pc.	2200098
	K019	1 - 9999	Dummy rubber	for pre-screening units		Lower deck			1 pc.	WX3225246
			QM-GRADE 10 rectangular mesh	for pre-screening units	10 mm	Lower deck		4 mm	1 pc.	2335436
				for secondary screening units	10 mm	Upper deck - NSE	Screen section, large	4 mm	4 pc.	2234836
				for secondary screening units	10 mm	Upper deck - NSE	Screen section, small	4 mm	1 pc.	2234837
			QM-GRADE 12 rectangular mesh	for secondary screening units	12 mm	Upper deck - NSE	Screen section, large	4 mm	4 pc.	M20001524
				for secondary screening units	12 mm	Upper deck - NSE	Screen section, small	4 mm	1 pc.	M20001523
				for pre-screening units	12 mm	Lower deck		4 mm	1 pc.	2335438
			QM-GRADE 15 rectangular mesh	for secondary screening units	15 mm	Upper deck - NSE	Screen section, large	4 mm	4 pc.	M20001533
				for secondary screening units	15 mm	Upper deck - NSE	Screen section, small	4 mm	1 pc.	M20001534
				for pre-screening units	15 mm	Lower deck		4 mm	1 pc.	2335441

WIRE MESH										
Series code	Serial code	Series range	Part	Version	Clear mesh size	Deck	Position	Wire diameter	Requirement	Part no.
MR 110 EVO	K019	1 - 9999	QM-GRADE 16 rectangular mesh	for secondary screening units	16 mm	Upper deck - NSE	Screen section, large	4 mm	4 pc.	2220306
				for secondary screening units	16 mm	Upper deck - NSE	Screen section, small	4 mm	1 pc.	2220305
			QM-GRADE 18 rectangular mesh	for secondary screening units	18 mm	Upper deck - NSE	Screen section, small	5 mm	1 pc.	2395289
				for secondary screening units	18 mm	Upper deck - NSE	Screen section, large	5 mm	4 pc.	2395288
			QM-GRADE 20 rectangular mesh	for secondary screening units	20 mm	Upper deck - NSE	Screen section, small	5 mm	1 pc.	2234862
				for pre-screening units	20 mm	Lower deck		5 mm	1 pc.	2335444
				for secondary screening units	20 mm	Upper deck - NSE	Screen section, large	5 mm	4 pc.	2234861
			QM-GRADE 22 rectangular mesh	for secondary screening units	22 mm	Upper deck - NSE	Screen section, small	6 mm	1 pc.	2292816
				for secondary screening units	22 mm	Upper deck - NSE	Screen section, large	6 mm	4 pc.	2292815
			QM-GRADE 25 rectangular mesh	for secondary screening units	25 mm	Upper deck - NSE	Screen section, large	6 mm	4 pc.	M20001411
				for secondary screening units	25 mm	Upper deck - NSE	Screen section, small	6 mm	1 pc.	M20001410
				for pre-screening units	25 mm	Lower deck		6 mm	1 pc.	2335446

WIRE MESH										
Series code	Serial code	Series range	Part	Version	Clear mesh size	Deck	Position	Wire diameter	Requirement	Part no.
MR 110 EVO	K019	1 - 9999	QM-GRADE 28 rectangular mesh	for secondary screening units	28 mm	Upper deck - NSE	Screen section, small	6 mm	1 pc.	M20001531
				for secondary screening units	28 mm	Upper deck - NSE	Screen section, large	6 mm	4 pc.	M20001532
			QM-GRADE 30 rectangular mesh	for pre-screening units	30 mm	Lower deck		7 mm	1 pc.	2335448
				for secondary screening units	30 mm	Upper deck - NSE	Screen section, large	8 mm	4 pc.	2234867
				for secondary screening units	30 mm	Upper deck - NSE	Screen section, small	8 mm	1 pc.	2234871
			QM-GRADE 32 rectangular mesh	for pre-screening units	32 mm	Lower deck		8 mm	1 pc.	2335450
				for secondary screening units	32 mm	Upper deck - NSE	Screen section, small	6 mm	1 pc.	2292822
				for secondary screening units	32 mm	Upper deck - NSE	Screen section, large	6 mm	4 pc.	2292821
			QM-GRADE 35 rectangular mesh	for secondary screening units	35 mm	Upper deck - NSE	Screen section, large	8 mm	4 pc.	2234878
				for pre-screening units	35 mm	Lower deck		8 mm	1 pc.	2335453
				for secondary screening units	35 mm	Upper deck - NSE	Screen section, small	8 mm	1 pc.	2234880
			QM-GRADE 40 rectangular mesh	for secondary screening units	40 mm	Upper deck - NSE	Screen section, large	8 mm	4 pc.	M20001405
				for pre-screening units	40 mm	Lower deck		8 mm	1 pc.	2335455

WIRE MESH										
Series code	Serial code	Series range	Part	Version	Clear mesh size	Deck	Position	Wire diameter	Requirement	Part no.
MR 110 EVO	K019	1 - 9999	QM-GRADE 40 rectangular mesh	for secondary screening units	40 mm	Upper deck - NSE	Screen section, small	8 mm	1 pc.	M20001404
			QM-GRADE 45 rectangular mesh	for pre-screening units	45 mm	Lower deck		8 mm	1 pc.	2335457
				for secondary screening units	45 mm	Upper deck - NSE	Screen section, small	8 mm	1 pc.	M20001639
				for secondary screening units	45 mm	Upper deck - NSE	Screen section, large	8 mm	4 pc.	M20001640
			QM-GRADE 50 rectangular mesh	for pre-screening units	50 mm	Lower deck		8 mm	1 pc.	2335459
				for secondary screening units	50 mm	Upper deck - NSE	Screen section, small	10 mm	1 pc.	M20001369
				for secondary screening units	50 mm	Upper deck - NSE	Screen section, large	10 mm	4 pc.	M20001370
			QM-GRADE 55 rectangular mesh	for pre-screening units	55 mm	Lower deck		8 mm	1 pc.	2335461
				for secondary screening units	55 mm	Upper deck - NSE	Screen section, small	10 mm	1 pc.	M20001579
				for secondary screening units	55 mm	Upper deck - NSE	Screen section, large	10 mm	4 pc.	M20001571
			QM-GRADE 60 rectangular mesh	for secondary screening units	60 mm	Upper deck - NSE	Screen section, large	10 mm	4 pc.	M20001716
				for secondary screening units	60 mm	Upper deck - NSE	Screen section, small	10 mm	1 pc.	M20001715

WIRE MESH										
Series code	Serial code	Series range	Part	Version	Clear mesh size	Deck	Position	Wire diameter	Requirement	Part no.
MR 110 EVO	K019	1 - 9999	QM-GRADE 65 rectangular mesh	for secondary screening units	65 mm	Upper deck - NSE	Screen section, large	10 mm	4 pc.	M20001529
				for secondary screening units	65 mm	Upper deck - NSE	Screen section, small	10 mm	1 pc.	M20001530
			QM-GRADE 70 rectangular mesh	for secondary screening units	70 mm	Upper deck - NSE	Screen section, small	10 mm	1 pc.	M20001679
				for secondary screening units	70 mm	Upper deck - NSE	Screen section, large	10 mm	4 pc.	M20001678
			QM-GRADE 8 rectangular mesh	for secondary screening units	8 mm	Upper deck - NSE	Screen section, large	3 mm	4 pc.	2632145
				for secondary screening units	8 mm	Upper deck - NSE	Screen section, small	3 mm	1 pc.	2632147
			QM-GRADE 80 rectangular mesh	for secondary screening units	80 mm	Upper deck - NSE	Screen section, large	10 mm	4 pc.	2202449
				for secondary screening units	80 mm	Upper deck - NSE	Screen section, small	10 mm	1 pc.	2202450
			QM-GRADE 90 rectangular mesh	for secondary screening units	90 mm	Upper deck - NSE	Screen section, small	10 mm	1 pc.	2200098
				for secondary screening units	90 mm	Upper deck - NSE	Screen section, large	10 mm	4 pc.	2200097
MR 122 PRO	K062	1 - 9999	Dummy rubber	for pre-screening units		Lower deck			1 pc.	F10285544
			QM-GRADE 10 rectangular mesh	for pre-screening units	10 mm	Lower deck		4 mm	1 pc.	M10010237

WIRE MESH

Series code	Serial code	Series range	Part	Version	Clear mesh size	Deck	Position	Wire diameter	Requirement	Part no.
MR 122 PRO	K062	1 - 9999	QM-GRADE 12 rectangular mesh	for pre-screening units	12 mm	Lower deck		4 mm	1 pc.	2234790
			QM-GRADE 15 rectangular mesh	for pre-screening units	15 mm	Lower deck		4 mm	1 pc.	M10013885
			QM-GRADE 16 rectangular mesh	for pre-screening units	16 mm	Lower deck		4 mm	1 pc.	M10007592
			QM-GRADE 18 rectangular mesh	for pre-screening units	18 mm	Lower deck		4 mm	1 pc.	M10007005
			QM-GRADE 20 rectangular mesh	for pre-screening units	20 mm	Lower deck		5 mm	1 pc.	M10007905
			QM-GRADE 22 rectangular mesh	for pre-screening units	22 mm	Lower deck		6 mm	1 pc.	M10005821
			QM-GRADE 25 rectangular mesh	for pre-screening units	25 mm	Lower deck		6 mm	1 pc.	M10010004
			QM-GRADE 28 rectangular mesh	for pre-screening units	28 mm	Lower deck		6.3 mm	1 pc.	M10009743

WIRE MESH										
Series code	Serial code	Series range	Part	Version	Clear mesh size	Deck	Posi-tion	Wire dia-meter	Re-quire-ment	Part no.
MR 122 PRO	K062	1 - 9999	QM-GRADE 30 rect-angular mesh	for pre-screening units	30 mm	Lower deck		8 mm	1 pc.	M20000033
			QM-GRADE 32 rect-angular mesh	for pre-screening units	32 mm	Lower deck		8 mm	1 pc.	M10008122
			QM-GRADE 35 rect-angular mesh	for pre-screening units	35 mm	Lower deck		8 mm	1 pc.	M10004739
			QM-GRADE 40 rect-angular mesh	for pre-screening units	40 mm	Lower deck		8 mm	1 pc.	M10004738
			QM-GRADE 45 rect-angular mesh	for pre-screening units	45 mm	Lower deck		8 mm	1 pc.	M10006092
			QM-GRADE 50 rect-angular mesh	for pre-screening units	50 mm	Lower deck		10 mm	1 pc.	M10012445
			QM-GRADE 55 rect-angular mesh	for pre-screening units	55 mm	Lower deck		10 mm	1 pc.	M10016328
			QM-GRADE 60 rect-angular mesh	for pre-screening units	60 mm	Lower deck		10 mm	1 pc.	M20000339

WIRE MESH

Series code	Serial code	Series range	Part	Version	Clear mesh size	Deck	Position	Wire diameter	Requirement	Part no.
MR 122 PRO	K062	1 - 9999	QM-GRADE 65 rectangular mesh	for pre-screening units	65 mm	Lower deck		10 mm	1 pc.	M20000040
			QM-GRADE 8 rectangular mesh	for pre-screening units	8 mm	Lower deck		4 mm	1 pc.	M20000952
MR 130 R EVO	K023	200 - 9999	QM-GRADE 12 rectangular mesh	for secondary screening units & Mobiscreen series	12 mm	Upper deck - NSE	Screen section, large	4 mm	4 pc.	2448849
			QM-GRADE 13 rectangular mesh	for secondary screening units	13 mm	Upper deck - NSE	Screen section, small	4 mm	1 pc.	2215644
				for secondary screening units	13 mm	Upper deck - NSE	Screen section, large	4 mm	4 pc.	2209721
			QM-GRADE 20 rectangular mesh	for pre-screening units	20 mm	Lower deck		5 mm	1 pc.	M20001682
			QM-GRADE 25 rectangular mesh	for pre-screening units	25 mm	Lower deck		6 mm	1 pc.	M20001683
			QM-GRADE 30 rectangular mesh	for secondary screening units	30 mm	Upper deck - NSE	Screen section, large	7 mm	1 pc.	M20001593
				for pre-screening units	30 mm	Lower deck		6 mm	1 pc.	M20001684
				for secondary screening units	30 mm	Upper deck - NSE	Screen section, small	7 mm	1 pc.	M20001592

WIRE MESH										
Series code	Serial code	Series range	Part	Version	Clear mesh size	Deck	Position	Wire diameter	Requirement	Part no.
MR 130 R EVO	K023	200 - 9999	QM-GRADE 35 rectangular mesh	for pre-screening units	35 mm	Lower deck		8 mm	1 pc.	M20001685
MR 130 Z EVO	K024	1 - 299	Dummy rubber	for pre-screening units		Lower deck			1 pc.	F10285544
			QM-GRADE 10 rectangular mesh	for pre-screening units	10 mm	Lower deck		4 mm	1 pc.	M10010237
			QM-GRADE 12 rectangular mesh	for pre-screening units	12 mm	Lower deck		4 mm	1 pc.	2234790
			QM-GRADE 15 rectangular mesh	for pre-screening units	15 mm	Lower deck		4 mm	1 pc.	M10013885
			QM-GRADE 16 rectangular mesh	for secondary screening units	16 mm	Upper deck - NSE	Screen section, large	4 mm	2 pc.	M10020584
				for pre-screening units	16 mm	Lower deck		4 mm	1 pc.	M10007592
			QM-GRADE 18 rectangular mesh	for pre-screening units	18 mm	Lower deck		4 mm	1 pc.	M10007005
			QM-GRADE 20 rectangular mesh	for pre-screening units	20 mm	Lower deck		5 mm	1 pc.	M10007905
				for secondary screening units	20 mm	Upper deck - NSE	Screen section, large	6 mm	2 pc.	M10016387

WIRE MESH										
Series code	Serial code	Series range	Part	Version	Clear mesh size	Deck	Position	Wire diameter	Requirement	Part no.
MR 130 Z EVO	K024	1 - 299	QM-GRADE 22 rectangular mesh	for pre-screening units	22 mm	Lower deck		6 mm	1 pc.	M10005821
			QM-GRADE 25 rectangular mesh	for pre-screening units	25 mm	Lower deck		6 mm	1 pc.	M10010004
			QM-GRADE 28 rectangular mesh	for secondary screening units	28 mm	Upper deck - NSE	Screen section, large	6 mm	2 pc.	M20000089
				for pre-screening units	28 mm	Lower deck		6.3 mm	1 pc.	M10009743
			QM-GRADE 30 rectangular mesh	for secondary screening units	30 mm	Upper deck - NSE	Screen section, large	6 mm	2 pc.	M20000082
				for pre-screening units	30 mm	Lower deck		8 mm	1 pc.	M20000033
			QM-GRADE 32 rectangular mesh	for pre-screening units	32 mm	Lower deck		8 mm	1 pc.	M10008122
			QM-GRADE 35 rectangular mesh	for pre-screening units	35 mm	Lower deck		8 mm	1 pc.	M10004739
			QM-GRADE 40 rectangular mesh	for pre-screening units	40 mm	Lower deck		8 mm	1 pc.	M10004738
				for secondary screening units	40 mm	Upper deck - NSE	Screen section, large	8 mm	2 pc.	M10016477

WIRE MESH										
Series code	Serial code	Series range	Part	Version	Clear mesh size	Deck	Position	Wire diameter	Requirement	Part no.
MR 130 Z EVO	K024	1 - 299	QM-GRADE 45 rectangular mesh	for pre-screening units	45 mm	Lower deck		8 mm	1 pc.	M10006092
			QM-GRADE 50 rectangular mesh	for secondary screening units	50 mm	Upper deck - NSE	Screen section, large	10 mm	2 pc.	M10017445
				for pre-screening units	50 mm	Lower deck		10 mm	1 pc.	M10012445
			QM-GRADE 55 rectangular mesh	for pre-screening units	55 mm	Lower deck		10 mm	1 pc.	M10016328
				for secondary screening units	55 mm	Upper deck - NSE	Screen section, large	10 mm	2 pc.	M10016650
			QM-GRADE 60 rectangular mesh	for pre-screening units	60 mm	Lower deck		10 mm	1 pc.	M20000339
				for secondary screening units	60 mm	Upper deck - NSE	Screen section, large	10 mm	2 pc.	M10016275
			QM-GRADE 65 rectangular mesh	for pre-screening units	65 mm	Lower deck		10 mm	1 pc.	M20000040
			QM-GRADE 8 rectangular mesh	for pre-screening units	8 mm	Lower deck		4 mm	1 pc.	M20000952
		301 - 9999	Dummy rubber	for pre-screening units		Lower deck			1 pc.	F10285544

WIRE MESH

Series code	Serial code	Series range	Part	Version	Clear mesh size	Deck	Position	Wire diameter	Requirement	Part no.
MR 130 Z EVO	K024	301 - 9999	QM-GRADE 10 rectangular mesh	For use with MOBI-SCREEN series and secondary screening units	10 mm	Upper deck - NSE	Screen section, large	4 mm	4 pc.	2208580
				for secondary screening units	10 mm	Upper deck - NSE	Screen section, small	4 mm	1 pc.	2208582
				for pre-screening units	10 mm	Lower deck		4 mm	1 pc.	M10010237
			QM-GRADE 12 rectangular mesh	for secondary screening units & Mobiscreen series	12 mm	Upper deck - NSE	Screen section, large	4 mm	4 pc.	2448849
				for secondary screening units	12 mm	Upper deck - NSE	Screen section, small	4 mm	1 pc.	2234825
				for pre-screening units	12 mm	Lower deck		4 mm	1 pc.	2234790
			QM-GRADE 15 rectangular mesh	for secondary screening units	15 mm	Upper deck - NSE	Screen section, large	4 mm	4 pc.	2212424
				for pre-screening units	15 mm	Lower deck		4 mm	1 pc.	M10013885
				for secondary screening units	15 mm	Upper deck - NSE	Screen section, small	4 mm	1 pc.	2212430
			QM-GRADE 16 rectangular mesh	for secondary screening units	16 mm	Upper deck - NSE	Screen section, small	4 mm	1 pc.	M20001562
				for pre-screening units	16 mm	Lower deck		4 mm	1 pc.	M10007592

WIRE MESH										
Series code	Serial code	Series range	Part	Version	Clear mesh size	Deck	Position	Wire diameter	Requirement	Part no.
MR 130 Z EVO	K024	301 - 9999	QM-GRADE 16 rectangular mesh	for secondary screening units	16 mm	Upper deck - NSE	Screen section, large	4 mm	4 pc.	M10006857
			QM-GRADE 18 rectangular mesh	for pre-screening units	18 mm	Lower deck		4 mm	1 pc.	M10007005
				for secondary screening units	18 mm	Upper deck - NSE	Screen section, small	4 mm	1 pc.	2193527
				for secondary screening units	18 mm	Upper deck - NSE	Screen section, large	4 mm	4 pc.	2193517
			QM-GRADE 20 rectangular mesh	for secondary screening units	20 mm	Upper deck - NSE	Screen section, small	5 mm	1 pc.	M20001561
				for pre-screening units	20 mm	Lower deck		5 mm	1 pc.	M10007905
				For use with MOBI-SCREEN series and secondary screening units	20 mm	Upper deck - NSE	Screen section, large	5 mm	4 pc.	M10003491
			QM-GRADE 22 rectangular mesh	for secondary screening units	22 mm	Upper deck - NSE	Screen section, large	5 mm	4 pc.	M10004471
				for secondary screening units	22 mm	Upper deck - NSE	Screen section, small	5 mm	1 pc.	2215293
				for pre-screening units	22 mm	Lower deck		6 mm	1 pc.	M10005821

WIRE MESH										
Series code	Serial code	Series range	Part	Version	Clear mesh size	Deck	Position	Wire diameter	Requirement	Part no.
MR 130 Z EVO	K024	301 - 9999	QM-GRADE 25 rectangular mesh	For use with MOBI-SCREEN series and secondary screening units	25 mm	Upper deck - NSE	Screen section, large	6 mm	4 pc.	M20001551
				for secondary screening units	25 mm	Upper deck - NSE	Screen section, small	6 mm	1 pc.	M20001552
				for pre-screening units	25 mm	Lower deck		6 mm	1 pc.	M10010004
			QM-GRADE 28 rectangular mesh	For use with MOBI-SCREEN series and secondary screening units	28 mm	Upper deck - NSE	Screen section, large	6 mm	4 pc.	M20001713
				for secondary screening units	28 mm	Upper deck - NSE	Screen section, small	6 mm	1 pc.	M20001714
				for pre-screening units	28 mm	Lower deck		6.3 mm	1 pc.	M10009743
			QM-GRADE 30 rectangular mesh	For use with MOBI-SCREEN series and secondary screening units	30 mm	Upper deck - NSE	Screen section, large	7 mm	4 pc.	2234476
				for secondary screening units	30 mm	Upper deck - NSE	Screen section, small	7 mm	1 pc.	2234480
				for pre-screening units	30 mm	Lower deck		8 mm	1 pc.	M20000033

WIRE MESH										
Series code	Serial code	Series range	Part	Version	Clear mesh size	Deck	Position	Wire diameter	Requirement	Part no.
MR 130 Z EVO	K024	301 - 9999	QM-GRADE 32 rectangular mesh	for secondary screening units	32 mm	Upper deck - NSE	Screen section, large	7 mm	4 pc.	M20001749
				for secondary screening units	32 mm	Upper deck - NSE	Screen section, small	7 mm	1 pc.	M20001750
				for pre-screening units	32 mm	Lower deck		8 mm	1 pc.	M10008122
			QM-GRADE 35 rectangular mesh	for pre-screening units	35 mm	Lower deck		8 mm	1 pc.	M10004739
				for secondary screening units	35 mm	Upper deck - NSE	Screen section, small	8 mm	1 pc.	M20001254
				for secondary screening units	35 mm	Upper deck - NSE	Screen section, large	8 mm	4 pc.	M10003179
			QM-GRADE 40 rectangular mesh	For use with MOBI-SCREEN series and secondary screening units	40 mm	Upper deck - NSE	Screen section, large	8 mm	4 pc.	M10005149
				for pre-screening units	40 mm	Lower deck		8 mm	1 pc.	M10004738
				for secondary screening units	40 mm	Upper deck - NSE	Screen section, small	8 mm	1 pc.	M20000795
			QM-GRADE 45 rectangular mesh	for pre-screening units	45 mm	Lower deck		8 mm	1 pc.	M10006092
				for secondary screening units	45 mm	Upper deck - NSE	Screen section, small	8 mm	1 pc.	M20001596

WIRE MESH

Series code	Serial code	Series range	Part	Version	Clear mesh size	Deck	Position	Wire diameter	Requirement	Part no.
MR 130 Z EVO	K024	301 - 9999	QM-GRADE 45 rectangular mesh	For use with MOBI-SCREEN series and secondary screening units	45 mm	Upper deck - NSE	Screen section, large	8 mm	4 pc.	M20001595
			QM-GRADE 50 rectangular mesh	for pre-screening units	50 mm	Lower deck		10 mm	1 pc.	M10012445
				For use with MOBI-SCREEN series and secondary screening units	50 mm	Upper deck - NSE	Screen section, large	10 mm	4 pc.	M20001298
				for secondary screening units	50 mm	Upper deck - NSE	Screen section, small	10 mm	1 pc.	M20001558
			QM-GRADE 55 rectangular mesh	for secondary screening units	55 mm	Upper deck - NSE	Screen section, small	10 mm	1 pc.	M20001554
				For use with MOBI-SCREEN series and secondary screening units	55 mm	Upper deck - NSE	Screen section, large	10 mm	4 pc.	M20001553
				for pre-screening units	55 mm	Lower deck		10 mm	1 pc.	M10016328
			QM-GRADE 60 rectangular mesh	For use with MOBI-SCREEN series and secondary screening units	60 mm	Upper deck - NSE	Screen section, large	10 mm	4 pc.	M20001555
				for pre-screening units	60 mm	Lower deck		10 mm	1 pc.	M20000339

WIRE MESH										
Series code	Serial code	Series range	Part	Version	Clear mesh size	Deck	Position	Wire diameter	Requirement	Part no.
MR 130 Z EVO	K024	301 - 9999	QM-GRADE 60 rectangular mesh	for secondary screening units	60 mm	Upper deck - NSE	Screen section, small	10 mm	1 pc.	M20001556
			QM-GRADE 65 rectangular mesh	for pre-screening units	65 mm	Lower deck		10 mm	1 pc.	M20000040
				for secondary screening units	65 mm	Upper deck - NSE	Screen section, small	10 mm	1 pc.	M20001560
				For use with MOBI-SCREEN series and secondary screening units	65 mm	Upper deck - NSE	Screen section, large	10 mm	4 pc.	M10010425
			QM-GRADE 70 rectangular mesh	for secondary screening units	70 mm	Upper deck - NSE	Screen section, small	10 mm	1 pc.	M20001753
				For use with MOBI-SCREEN series and secondary screening units	70 mm	Upper deck - NSE	Screen section, large	10 mm	4 pc.	M20001752
			QM-GRADE 8 rectangular mesh	for secondary screening units	8 mm	Upper deck - NSE	Screen section, small	3 mm	1 pc.	2348798
				for pre-screening units	8 mm	Lower deck		4 mm	1 pc.	M20000952
				For use with MOBI-SCREEN series and secondary screening units	8 mm	Upper deck - NSE	Screen section, large	3 mm	4 pc.	2348799

WIRE MESH

Series code	Serial code	Series range	Part	Version	Clear mesh size	Deck	Position	Wire diameter	Requirement	Part no.
MR 130 Z EVO	K024	301 - 9999	QM-GRADE 80 rectangular mesh	for secondary screening units	80 mm	Upper deck - NSE	Screen section, small	10 mm	1 pc.	2202979
				for secondary screening units	80 mm	Upper deck - NSE	Screen section, large	10 mm	4 pc.	2202978
			QM-GRADE 90 rectangular mesh	for secondary screening units	90 mm	Upper deck - NSE	Screen section, small	10 mm	1 pc.	2192481
				for secondary screening units	90 mm	Upper deck - NSE	Screen section, large	10 mm	4 pc.	2192479
MR 130 EVO	K077	1 - 9999	Dummy rubber	for pre-screening units		Lower deck			1 pc.	WX3157503
			QM-GRADE 10 rectangular mesh	for secondary screening units	10 mm	Upper deck - NSE	Screen section, small	4 mm	1 pc.	2208582
				For use with MOBI-SCREEN series and secondary screening units	10 mm	Upper deck - NSE	Screen section, large	4 mm	4 pc.	2208580
				for pre-screening units	10 mm	Lower deck		4 mm	1 pc.	2341115
			QM-GRADE 12 rectangular mesh	for secondary screening units & Mobiscreen series	12 mm	Upper deck - NSE	Screen section, large	4 mm	4 pc.	2448849
				for pre-screening units	12 mm	Lower deck		4 mm	1 pc.	2298433
				for secondary screening units	12 mm	Upper deck - NSE	Screen section, small	4 mm	1 pc.	2234825

WIRE MESH										
Series code	Serial code	Series range	Part	Version	Clear mesh size	Deck	Position	Wire diameter	Requirement	Part no.
MR 130 EVO	K077	1 - 9999	QM-GRADE 15 rectangular mesh	for secondary screening units	15 mm	Upper deck - NSE	Screen section, small	4 mm	1 pc.	2212430
				for secondary screening units	15 mm	Upper deck - NSE	Screen section, large	4 mm	4 pc.	2212424
				for pre-screening units	15 mm	Lower deck		4 mm	1 pc.	2341117
			QM-GRADE 16 rectangular mesh	for secondary screening units	16 mm	Upper deck - NSE	Screen section, large	4 mm	4 pc.	M10006857
				for secondary screening units	16 mm	Upper deck - NSE	Screen section, small	4 mm	1 pc.	M20001562
			QM-GRADE 18 rectangular mesh	for secondary screening units	18 mm	Upper deck - NSE	Screen section, large	4 mm	4 pc.	2193517
				for pre-screening units	18 mm	Lower deck		6 mm	1 pc.	2341118
				for secondary screening units	18 mm	Upper deck - NSE	Screen section, small	4 mm	1 pc.	2193527
			QM-GRADE 20 rectangular mesh	for pre-screening units	20 mm	Lower deck		6 mm	1 pc.	2341119
				For use with MOBI-SCREEN series and secondary screening units	20 mm	Upper deck - NSE	Screen section, large	5 mm	4 pc.	M10003491
				for secondary screening units	20 mm	Upper deck - NSE	Screen section, small	5 mm	1 pc.	M20001561

WIRE MESH										
Series code	Serial code	Series range	Part	Version	Clear mesh size	Deck	Position	Wire diameter	Requirement	Part no.
MR 130 EVO	K077	1 - 9999	QM-GRADE 22 rectangular mesh	for pre-screening units	22 mm	Lower deck		5 mm	1 pc.	2642432
				for secondary screening units	22 mm	Upper deck - NSE	Screen section, large	5 mm	4 pc.	M10004471
				for secondary screening units	22 mm	Upper deck - NSE	Screen section, small	5 mm	1 pc.	2215293
			QM-GRADE 25 rectangular mesh	for secondary screening units	25 mm	Upper deck - NSE	Screen section, small	6 mm	1 pc.	M20001552
				for pre-screening units	25 mm	Lower deck		6 mm	1 pc.	2298429
				For use with MOBI-SCREEN series and secondary screening units	25 mm	Upper deck - NSE	Screen section, large	6 mm	4 pc.	M20001551
			QM-GRADE 28 rectangular mesh	For use with MOBI-SCREEN series and secondary screening units	28 mm	Upper deck - NSE	Screen section, large	6 mm	4 pc.	M20001713
				for secondary screening units	28 mm	Upper deck - NSE	Screen section, small	6 mm	1 pc.	M20001714
			QM-GRADE 30 rectangular mesh	For use with MOBI-SCREEN series and secondary screening units	30 mm	Upper deck - NSE	Screen section, large	7 mm	4 pc.	2234476
				for pre-screening units	30 mm	Lower deck		8 mm	1 pc.	2341120

WIRE MESH										
Series code	Serial code	Series range	Part	Version	Clear mesh size	Deck	Position	Wire diameter	Requirement	Part no.
MR 130 EVO	K077	1 - 9999	QM-GRADE 30 rectangular mesh	for secondary screening units	30 mm	Upper deck - NSE	Screen section, small	7 mm	1 pc.	2234480
			QM-GRADE 32 rectangular mesh	for secondary screening units	32 mm	Upper deck - NSE	Screen section, small	7 mm	1 pc.	M20001750
				for secondary screening units	32 mm	Upper deck - NSE	Screen section, large	7 mm	4 pc.	M20001749
			QM-GRADE 35 rectangular mesh	for secondary screening units	35 mm	Upper deck - NSE	Screen section, large	8 mm	4 pc.	M10003179
				for secondary screening units	35 mm	Upper deck - NSE	Screen section, small	8 mm	1 pc.	M20001254
				for pre-screening units	35 mm	Lower deck		8 mm	1 pc.	2298424
			QM-GRADE 40 rectangular mesh	for pre-screening units	40 mm	Lower deck		8 mm	1 pc.	2341122
				For use with MOBI-SCREEN series and secondary screening units	40 mm	Upper deck - NSE	Screen section, large	8 mm	4 pc.	M10005149
				for secondary screening units	40 mm	Upper deck - NSE	Screen section, small	8 mm	1 pc.	M20000795

WIRE MESH										
Series code	Serial code	Series range	Part	Version	Clear mesh size	Deck	Position	Wire diameter	Requirement	Part no.
MR 130 EVO	K077	1 - 9999	QM-GRADE 45 rectangular mesh	for pre-screening units	45 mm	Lower deck		8 mm	1 pc.	2341123
				For use with MOBI-SCREEN series and secondary screening units	45 mm	Upper deck - NSE	Screen section, large	8 mm	4 pc.	M20001595
				for secondary screening units	45 mm	Upper deck - NSE	Screen section, small	8 mm	1 pc.	M20001596
			QM-GRADE 50 rectangular mesh	for secondary screening units	50 mm	Upper deck - NSE	Screen section, small	10 mm	1 pc.	M20001558
				for pre-screening units	50 mm	Lower deck		10 mm	1 pc.	2341124
				For use with MOBI-SCREEN series and secondary screening units	50 mm	Upper deck - NSE	Screen section, large	10 mm	4 pc.	M20001298
			QM-GRADE 55 rectangular mesh	for pre-screening units	55 mm	Lower deck		10 mm	1 pc.	2341126
				For use with MOBI-SCREEN series and secondary screening units	55 mm	Upper deck - NSE	Screen section, large	10 mm	4 pc.	M20001553
				for secondary screening units	55 mm	Upper deck - NSE	Screen section, small	10 mm	1 pc.	M20001554

WIRE MESH										
Series code	Serial code	Series range	Part	Version	Clear mesh size	Deck	Position	Wire diameter	Requirement	Part no.
MR 130 EVO	K077	1 - 9999	QM-GRADE 60 rectangular mesh	For use with MOBI-SCREEN series and secondary screening units	60 mm	Upper deck - NSE	Screen section, large	10 mm	4 pc.	M20001555
				for secondary screening units	60 mm	Upper deck - NSE	Screen section, small	10 mm	1 pc.	M20001556
			QM-GRADE 6.5 rectangular mesh	for pre-screening units	6.5 mm	Lower deck		2 mm	1 pc.	2601415
			QM-GRADE 65 rectangular mesh	For use with MOBI-SCREEN series and secondary screening units	65 mm	Upper deck - NSE	Screen section, large	10 mm	4 pc.	M10010425
				for secondary screening units	65 mm	Upper deck - NSE	Screen section, small	10 mm	1 pc.	M20001560
			QM-GRADE 70 rectangular mesh	For use with MOBI-SCREEN series and secondary screening units	70 mm	Upper deck - NSE	Screen section, large	10 mm	4 pc.	M20001752
				for secondary screening units	70 mm	Upper deck - NSE	Screen section, small	10 mm	1 pc.	M20001753

WIRE MESH

Series code	Serial code	Series range	Part	Version	Clear mesh size	Deck	Position	Wire diameter	Requirement	Part no.
MR 130 EVO	K077	1 - 9999	QM-GRADE 8 rectangular mesh	for secondary screening units	8 mm	Upper deck - NSE	Screen section, small	3 mm	1 pc.	2348798
				For use with MOBI-SCREEN series and secondary screening units	8 mm	Upper deck - NSE	Screen section, large	3 mm	4 pc.	2348799
			QM-GRADE 80 rectangular mesh	for secondary screening units	80 mm	Upper deck - NSE	Screen section, small	10 mm	1 pc.	2202979
				for secondary screening units	80 mm	Upper deck - NSE	Screen section, large	10 mm	4 pc.	2202978
			QM-GRADE 90 rectangular mesh	for secondary screening units	90 mm	Upper deck - NSE	Screen section, small	10 mm	1 pc.	2192481
				for secondary screening units	90 mm	Upper deck - NSE	Screen section, large	10 mm	4 pc.	2192479
	K078	1 - 9999	Dummy rubber	for pre-screening units		Lower deck			1 pc.	WX3157503
			QM-GRADE 10 rectangular mesh	For use with MOBI-SCREEN series and secondary screening units	10 mm	Upper deck - NSE	Screen section, large	4 mm	4 pc.	2208580
				for secondary screening units	10 mm	Upper deck - NSE	Screen section, small	4 mm	1 pc.	2208582
				for pre-screening units	10 mm	Lower deck		4 mm	1 pc.	2341115

WIRE MESH										
Series code	Serial code	Series range	Part	Version	Clear mesh size	Deck	Position	Wire diameter	Requirement	Part no.
MR 130 EVO	K078	1 - 9999	QM-GRADE 12 rectangular mesh	for secondary screening units	12 mm	Upper deck - NSE	Screen section, small	4 mm	1 pc.	2234825
				for secondary screening units & Mobiscreen series	12 mm	Upper deck - NSE	Screen section, large	4 mm	4 pc.	2448849
				for prescreening units	12 mm	Lower deck		4 mm	1 pc.	2298433
			QM-GRADE 15 rectangular mesh	for prescreening units	15 mm	Lower deck		4 mm	1 pc.	2341117
				for secondary screening units	15 mm	Upper deck - NSE	Screen section, large	4 mm	4 pc.	2212424
				for secondary screening units	15 mm	Upper deck - NSE	Screen section, small	4 mm	1 pc.	2212430
			QM-GRADE 16 rectangular mesh	for secondary screening units	16 mm	Upper deck - NSE	Screen section, large	4 mm	4 pc.	M10006857
				for secondary screening units	16 mm	Upper deck - NSE	Screen section, small	4 mm	1 pc.	M20001562
			QM-GRADE 18 rectangular mesh	for prescreening units	18 mm	Lower deck		6 mm	1 pc.	2341118
				for secondary screening units	18 mm	Upper deck - NSE	Screen section, large	4 mm	4 pc.	2193517
				for secondary screening units	18 mm	Upper deck - NSE	Screen section, small	4 mm	1 pc.	2193527

WIRE MESH										
Series code	Serial code	Series range	Part	Version	Clear mesh size	Deck	Position	Wire diameter	Requirement	Part no.
MR 130 EVO	K078	1 - 9999	QM-GRADE 20 rectangular mesh	for pre-screening units	20 mm	Lower deck		6 mm	1 pc.	2341119
				For use with MOBI-SCREEN series and secondary screening units	20 mm	Upper deck - NSE	Screen section, large	5 mm	4 pc.	M10003491
				for secondary screening units	20 mm	Upper deck - NSE	Screen section, small	5 mm	1 pc.	M20001561
			QM-GRADE 22 rectangular mesh	for secondary screening units	22 mm	Upper deck - NSE	Screen section, large	5 mm	4 pc.	M10004471
				for pre-screening units	22 mm	Lower deck		5 mm	1 pc.	2642432
				for secondary screening units	22 mm	Upper deck - NSE	Screen section, small	5 mm	1 pc.	2215293
			QM-GRADE 25 rectangular mesh	for pre-screening units	25 mm	Lower deck		6 mm	1 pc.	2298429
				For use with MOBI-SCREEN series and secondary screening units	25 mm	Upper deck - NSE	Screen section, large	6 mm	4 pc.	M20001551
				for secondary screening units	25 mm	Upper deck - NSE	Screen section, small	6 mm	1 pc.	M20001552

WIRE MESH										
Series code	Serial code	Series range	Part	Version	Clear mesh size	Deck	Position	Wire diameter	Requirement	Part no.
MR 130 EVO	K078	1 - 9999	QM-GRADE 28 rectangular mesh	for secondary screening units	28 mm	Upper deck - NSE	Screen section, small	6 mm	1 pc.	M20001714
				For use with MOBI-SCREEN series and secondary screening units	28 mm	Upper deck - NSE	Screen section, large	6 mm	4 pc.	M20001713
			QM-GRADE 30 rectangular mesh	for secondary screening units	30 mm	Upper deck - NSE	Screen section, small	7 mm	1 pc.	2234480
				for pre-screening units	30 mm	Lower deck		8 mm	1 pc.	2341120
				For use with MOBI-SCREEN series and secondary screening units	30 mm	Upper deck - NSE	Screen section, large	7 mm	4 pc.	2234476
			QM-GRADE 32 rectangular mesh	for secondary screening units	32 mm	Upper deck - NSE	Screen section, small	7 mm	1 pc.	M20001750
				for secondary screening units	32 mm	Upper deck - NSE	Screen section, large	7 mm	4 pc.	M20001749
			QM-GRADE 35 rectangular mesh	for secondary screening units	35 mm	Upper deck - NSE	Screen section, large	8 mm	4 pc.	M10003179
				for secondary screening units	35 mm	Upper deck - NSE	Screen section, small	8 mm	1 pc.	M20001254
				for pre-screening units	35 mm	Lower deck		8 mm	1 pc.	2298424

WIRE MESH										
Series code	Serial code	Series range	Part	Version	Clear mesh size	Deck	Position	Wire diameter	Requirement	Part no.
MR 130 EVO	K078	1 - 9999	QM-GRADE 40 rectangular mesh	for pre-screening units	40 mm	Lower deck		8 mm	1 pc.	2341122
				For use with MOBI-SCREEN series and secondary screening units	40 mm	Upper deck - NSE	Screen section, large	8 mm	4 pc.	M10005149
				for secondary screening units	40 mm	Upper deck - NSE	Screen section, small	8 mm	1 pc.	M20000795
			QM-GRADE 45 rectangular mesh	for secondary screening units	45 mm	Upper deck - NSE	Screen section, small	8 mm	1 pc.	M20001596
				For use with MOBI-SCREEN series and secondary screening units	45 mm	Upper deck - NSE	Screen section, large	8 mm	4 pc.	M20001595
				for pre-screening units	45 mm	Lower deck		8 mm	1 pc.	2341123
			QM-GRADE 50 rectangular mesh	For use with MOBI-SCREEN series and secondary screening units	50 mm	Upper deck - NSE	Screen section, large	10 mm	4 pc.	M20001298
				for secondary screening units	50 mm	Upper deck - NSE	Screen section, small	10 mm	1 pc.	M20001558
				for pre-screening units	50 mm	Lower deck		10 mm	1 pc.	2341124

WIRE MESH										
Series code	Serial code	Series range	Part	Version	Clear mesh size	Deck	Position	Wire diameter	Requirement	Part no.
MR 130 EVO	K078	1 - 9999	QM-GRADE 55 rectangular mesh	For use with MOBI-SCREEN series and secondary screening units	55 mm	Upper deck - NSE	Screen section, large	10 mm	4 pc.	M20001553
				for pre-screening units	55 mm	Lower deck		10 mm	1 pc.	2341126
				for secondary screening units	55 mm	Upper deck - NSE	Screen section, small	10 mm	1 pc.	M20001554
			QM-GRADE 60 rectangular mesh	For use with MOBI-SCREEN series and secondary screening units	60 mm	Upper deck - NSE	Screen section, large	10 mm	4 pc.	M20001555
				for secondary screening units	60 mm	Upper deck - NSE	Screen section, small	10 mm	1 pc.	M20001556
			QM-GRADE 6.5 rectangular mesh	for pre-screening units	6.5 mm	Lower deck		2 mm	1 pc.	2601415
			QM-GRADE 65 rectangular mesh	for secondary screening units	65 mm	Upper deck - NSE	Screen section, small	10 mm	1 pc.	M20001560
				For use with MOBI-SCREEN series and secondary screening units	65 mm	Upper deck - NSE	Screen section, large	10 mm	4 pc.	M10010425

WIRE MESH

Series code	Serial code	Series range	Part	Version	Clear mesh size	Deck	Position	Wire diameter	Requirement	Part no.
MR 130 EVO	K078	1 - 9999	QM-GRADE 70 rectangular mesh	For use with MOBI-SCREEN series and secondary screening units	70 mm	Upper deck - NSE	Screen section, large	10 mm	4 pc.	M20001752
				for secondary screening units	70 mm	Upper deck - NSE	Screen section, small	10 mm	1 pc.	M20001753
			QM-GRADE 8 rectangular mesh	For use with MOBI-SCREEN series and secondary screening units	8 mm	Upper deck - NSE	Screen section, large	3 mm	4 pc.	2348799
				for secondary screening units	8 mm	Upper deck - NSE	Screen section, small	3 mm	1 pc.	2348798
			QM-GRADE 80 rectangular mesh	for secondary screening units	80 mm	Upper deck - NSE	Screen section, small	10 mm	1 pc.	2202979
				for secondary screening units	80 mm	Upper deck - NSE	Screen section, large	10 mm	4 pc.	2202978
			QM-GRADE 90 rectangular mesh	for secondary screening units	90 mm	Upper deck - NSE	Screen section, large	10 mm	4 pc.	2192479
				for secondary screening units	90 mm	Upper deck - NSE	Screen section, small	10 mm	1 pc.	2192481
MSS 352 EVO	K067	1 - 222	QM-GRADE 20 rectangular mesh	for MOBI-SCREEN series	20 mm	Upper deck	Screen section, large	4 mm	1 pc.	2320717
			QM-GRADE 25 rectangular mesh	for MOBI-SCREEN series	25 mm	Upper deck	Screen section, large	5 mm	1 pc.	2227232

WIRE MESH										
Series code	Serial code	Series range	Part	Version	Clear mesh size	Deck	Position	Wire diameter	Requirement	Part no.
MSS 352 EVO	K067	1 - 222	QM-GRADE 30 rectangular mesh	for MOBISCREEN series	30 mm	Upper deck	Screen section, large	6 mm	1 pc.	2227279
			QM-GRADE 40 rectangular mesh	for MOBISCREEN series	40 mm	Upper deck	Screen section, large	8 mm	1 pc.	2227283
			QM-GRADE 45 rectangular mesh	for MOBISCREEN series	45 mm	Upper deck	Screen section, large	8 mm	1 pc.	2227285
			QM-GRADE 50 rectangular mesh	for MOBISCREEN series	50 mm	Upper deck	Screen section, large	10 mm	1 pc.	2227287
			QM-GRADE 60 rectangular mesh	for MOBISCREEN series	60 mm	Upper deck	Screen section, large	10 mm	1 pc.	2227299
			QM-GRADE 80 rectangular mesh	for MOBISCREEN series	80 mm	Upper deck	Screen section, large	10 mm	1 pc.	2227308
		1 - 9999	QM-GRADE 10 rectangular mesh	for MOBISCREEN series	10 mm	Lower deck	Screen section, small	4 mm	1 pc.	2227352
				for MOBISCREEN series	10 mm	Lower deck	Screen section, large	4 mm	1 pc.	2227330
			QM-GRADE 12 rectangular mesh	for MOBISCREEN series	12 mm	Lower deck	Screen section, small	4 mm	1 pc.	2227354
				for MOBISCREEN series	12 mm	Lower deck	Screen section, large	4 mm	1 pc.	2227335

WIRE MESH										
Series code	Serial code	Series range	Part	Version	Clear mesh size	Deck	Position	Wire diameter	Requirement	Part no.
MSS 352 EVO	K067	1 - 9999	QM-GRADE 20 rectangular mesh	for MOBI-SCREEN series	20 mm	Lower deck	Screen section, small	4 mm	1 pc.	2227361
				for MOBI-SCREEN series	20 mm	Lower deck	Screen section, large	4 mm	1 pc.	2228359
			QM-GRADE 25 rectangular mesh	for MOBI-SCREEN series	25 mm	Lower deck	Screen section, large	5 mm	1 pc.	2313339
				for MOBI-SCREEN series	25 mm	Lower deck	Screen section, small	5 mm	1 pc.	2313343
			QM-GRADE 30 rectangular mesh	for MOBI-SCREEN series	30 mm	Lower deck	Screen section, small	6 mm	1 pc.	2227363
				for MOBI-SCREEN series	30 mm	Lower deck	Screen section, large	6 mm	1 pc.	2227339
			QM-GRADE 40 rectangular mesh	for MOBI-SCREEN series	40 mm	Lower deck	Screen section, small	8 mm	1 pc.	2227367
				for MOBI-SCREEN series	40 mm	Lower deck	Screen section, large	8 mm	1 pc.	2227341
			QM-GRADE 50 rectangular mesh	for MOBI-SCREEN series	50 mm	Lower deck	Screen section, small	8 mm	1 pc.	2227368
				for MOBI-SCREEN series	50 mm	Lower deck	Screen section, large	8 mm	1 pc.	2227342
			QM-GRADE 8 rectangular mesh	for MOBI-SCREEN series	8 mm	Lower deck	Screen section, small	3 mm	1 pc.	2216655
				for MOBI-SCREEN series	8 mm	Lower deck	Screen section, large	3 mm	1 pc.	2216654

WIRE MESH										
Series code	Serial code	Series range	Part	Version	Clear mesh size	Deck	Position	Wire diameter	Requirement	Part no.
MSS 352 EVO	K067	223 - 9999	QM-GRADE 100 rectangular mesh	for MOBI-SCREEN series	100 mm	Upper deck	Screen section, large	10 mm	2 pc.	2529901
			QM-GRADE 40 rectangular mesh	for MOBI-SCREEN series	40 mm	Upper deck	Screen section, large	8 mm	2 pc.	2531585
			QM-GRADE 50 rectangular mesh	for MOBI-SCREEN series	50 mm	Upper deck	Screen section, large	10 mm	2 pc.	2529893
			QM-GRADE 55 rectangular mesh	for MOBI-SCREEN series	55 mm	Upper deck	Screen section, large	10 mm	2 pc.	2529894
			QM-GRADE 60 rectangular mesh	for MOBI-SCREEN series	60 mm	Upper deck	Screen section, large	10 mm	2 pc.	2529895
			QM-GRADE 65 rectangular mesh	for MOBI-SCREEN series	65 mm	Upper deck	Screen section, large	10 mm	2 pc.	2529896
			QM-GRADE 70 rectangular mesh	for MOBI-SCREEN series	70 mm	Upper deck	Screen section, large	10 mm	2 pc.	2529897
			QM-GRADE 75 rectangular mesh	for MOBI-SCREEN series	75 mm	Upper deck	Screen section, large	10 mm	2 pc.	2529898

WIRE MESH

Series code	Serial code	Series range	Part	Version	Clear mesh size	Deck	Position	Wire diameter	Requirement	Part no.
MSS 352 EVO	K067	223 - 9999	QM-GRADE 80 rectangular mesh	for MOBISCREEN series	80 mm	Upper deck	Screen section, large	10 mm	2 pc.	2529899
			QM-GRADE 90 rectangular mesh	for MOBISCREEN series	90 mm	Upper deck	Screen section, large	10 mm	2 pc.	2529900
MSS 502 EVO	K066	1 - 9999	CMS 30 rectangular mesh	for MOBISCREEN series	30 mm	Lower deck	Screen section, large	6 mm	2 pc.	2228395
			QM-GRADE 10 rectangular mesh	for MOBISCREEN series	10 mm	Upper deck	Screen section, large	4 mm	3 pc.	2227785
				for MOBISCREEN series	10 mm	Lower deck	Screen section, large	3 mm	2 pc.	2199248
			QM-GRADE 12 rectangular mesh	for MOBISCREEN series	12 mm	Upper deck	Screen section, large	4 mm	3 pc.	2227768
			QM-GRADE 15 rectangular mesh	for MOBISCREEN series	15 mm	Upper deck	Screen section, large	4 mm	3 pc.	2227769
			QM-GRADE 18 rectangular mesh	for MOBISCREEN series	18 mm	Upper deck	Screen section, large	5 mm	3 pc.	2219139
			QM-GRADE 20 rectangular mesh	for MOBISCREEN series	20 mm	Lower deck	Screen section, large	5 mm	2 pc.	M20001473
				for MOBISCREEN series	20 mm	Upper deck	Screen section, large	5 mm	3 pc.	2227772

WIRE MESH										
Series code	Serial code	Series range	Part	Version	Clear mesh size	Deck	Position	Wire diameter	Requirement	Part no.
MSS 502 EVO	K066	1 - 9999	QM-GRADE 25 rectangular mesh	for MOBISCREEN series	25 mm	Lower deck	Screen section, large	5 mm	2 pc.	M20001603
				for MOBISCREEN series	25 mm	Upper deck	Screen section, large	5 mm	3 pc.	2227774
			QM-GRADE 30 rectangular mesh	for MOBISCREEN series	30 mm	Upper deck	Screen section, large	6 mm	3 pc.	2296423
			QM-GRADE 32 rectangular mesh	for MOBISCREEN series	32 mm	Upper deck	Screen section, large	6 mm	3 pc.	2296425
			QM-GRADE 35 rectangular mesh	for MOBISCREEN series	35 mm	Upper deck	Screen section, large	8 mm	3 pc.	2227776
			QM-GRADE 40 rectangular mesh	for MOBISCREEN series	40 mm	Upper deck	Screen section, large	8 mm	3 pc.	M20001582
				for MOBISCREEN series	40 mm	Lower deck	Screen section, large	8 mm	2 pc.	M20001703
			QM-GRADE 45 rectangular mesh	for MOBISCREEN series	45 mm	Lower deck	Screen section, large	8 mm	2 pc.	2235994
				for MOBISCREEN series	45 mm	Upper deck	Screen section, large	8 mm	3 pc.	2227777
			QM-GRADE 50 rectangular mesh	for MOBISCREEN series	50 mm	Upper deck	Screen section, large	8 mm	3 pc.	M20001386
				for MOBISCREEN series	50 mm	Lower deck	Screen section, large	8 mm	2 pc.	2228397

WIRE MESH										
Series code	Serial code	Series range	Part	Version	Clear mesh size	Deck	Position	Wire diameter	Requirement	Part no.
MSS 502 EVO	K066	1 - 9999	QM-GRADE 55 rectangular mesh	for MOBISCREEN series	55 mm	Upper deck	Screen section, large	8 mm	3 pc.	M20001627
			QM-GRADE 60 rectangular mesh	for MOBISCREEN series	60 mm	Upper deck	Screen section, large	8 mm	3 pc.	2227778
			QM-GRADE 65 rectangular mesh	for MOBISCREEN series	65 mm	Upper deck	Screen section, large	8 mm	3 pc.	2227779
			QM-GRADE 7 rectangular mesh	for MOBISCREEN series	7 mm	Lower deck	Screen section, large	3 mm	2 pc.	2228390
			QM-GRADE 70 rectangular mesh	for MOBISCREEN series	70 mm	Upper deck	Screen section, large	10 mm	3 pc.	M20001605
			QM-GRADE 8 rectangular mesh	for MOBISCREEN series	8 mm	Lower deck	Screen section, large	3 mm	2 pc.	2228391
			QM-GRADE 90 rectangular mesh	for MOBISCREEN series	90 mm	Upper deck	Screen section, large	10 mm	3 pc.	2227783
MS 14 Z	K068	1 - 9999	QM-GRADE 10 rectangular mesh	for MOBISCREEN series	10 mm	Lower deck	Screen section, large	4 mm	1 pc.	2227636
				for MOBISCREEN series	10 mm	Upper deck	Screen section, large	4 mm	2 pc.	2227785

WIRE MESH										
Series code	Serial code	Series range	Part	Version	Clear mesh size	Deck	Position	Wire diameter	Requirement	Part no.
MS 14 Z	K068	1 - 9999	QM-GRADE 10 rectangular mesh	for MOBISCREEN series	10 mm	Upper deck	Screen section, small	4 mm	1 pc.	2227786
			QM-GRADE 12 rectangular mesh	for MOBISCREEN series	12 mm	Lower deck	Screen section, large	4 mm	1 pc.	2227638
				for MOBISCREEN series	12 mm	Upper deck	Screen section, large	4 mm	2 pc.	2227768
			QM-GRADE 15 rectangular mesh	for MOBISCREEN series	15 mm	Upper deck	Screen section, large	4 mm	2 pc.	2227769
				for MOBISCREEN series	15 mm	Upper deck	Screen section, small	4 mm	1 pc.	2227788
			QM-GRADE 18 rectangular mesh	for MOBISCREEN series	18 mm	Upper deck	Screen section, small	5 mm	1 pc.	2219140
				for MOBISCREEN series	18 mm	Upper deck	Screen section, large	5 mm	2 pc.	2219139
			QM-GRADE 20 rectangular mesh	for MOBISCREEN series	20 mm	Upper deck	Screen section, large	5 mm	2 pc.	2227772
				for MOBISCREEN series	20 mm	Lower deck	Screen section, large	4 mm	1 pc.	M20001606
				for MOBISCREEN series	20 mm	Upper deck	Screen section, small	5 mm	1 pc.	2227790
			QM-GRADE 25 rectangular mesh	for MOBISCREEN series	25 mm	Upper deck	Screen section, large	5 mm	2 pc.	2227774
				for MOBISCREEN series	25 mm	Lower deck	Screen section, large	5 mm	1 pc.	2227626

WIRE MESH										
Series code	Serial code	Series range	Part	Version	Clear mesh size	Deck	Position	Wire diameter	Requirement	Part no.
MS 14 Z	K068	1 - 9999	QM-GRADE 25 rectangular mesh	for MOBISCREEN series	25 mm	Upper deck	Screen section, small	5 mm	1 pc.	2227793
			QM-GRADE 30 rectangular mesh	for MOBISCREEN series	30 mm	Upper deck	Screen section, small	6 mm	1 pc.	2291875
				for MOBISCREEN series	30 mm	Upper deck	Screen section, large	6 mm	2 pc.	2296423
				for MOBISCREEN series	30 mm	Lower deck	Screen section, large	6 mm	1 pc.	2227627
			QM-GRADE 40 rectangular mesh	for MOBISCREEN series	40 mm	Upper deck	Screen section, small	8 mm	1 pc.	M20001610
				for MOBISCREEN series	40 mm	Upper deck	Screen section, large	8 mm	2 pc.	M20001582
				for MOBISCREEN series	40 mm	Lower deck	Screen section, large	8 mm	1 pc.	2227629
			QM-GRADE 45 rectangular mesh	for MOBISCREEN series	45 mm	Upper deck	Screen section, large	8 mm	2 pc.	2227777
				for MOBISCREEN series	45 mm	Upper deck	Screen section, small	8 mm	1 pc.	2227797
			QM-GRADE 50 rectangular mesh	for MOBISCREEN series	50 mm	Upper deck	Screen section, large	8 mm	2 pc.	M20001386
				for MOBISCREEN series	50 mm	Upper deck	Screen section, small	8 mm	1 pc.	2223200

WIRE MESH										
Series code	Serial code	Series range	Part	Version	Clear mesh size	Deck	Position	Wire diameter	Requirement	Part no.
MS 14 Z	K068	1 - 9999	QM-GRADE 55 rectangular mesh	for MOBISCREEN series	55 mm	Upper deck	Screen section, small	8 mm	1 pc.	2227799
				for MOBISCREEN series	55 mm	Upper deck	Screen section, large	8 mm	2 pc.	M20001627
			QM-GRADE 60 rectangular mesh	for MOBISCREEN series	60 mm	Upper deck	Screen section, small	8 mm	1 pc.	2227800
				for MOBISCREEN series	60 mm	Upper deck	Screen section, large	8 mm	2 pc.	2227778
			QM-GRADE 65 rectangular mesh	for MOBISCREEN series	65 mm	Upper deck	Screen section, large	8 mm	2 pc.	2227779
			QM-GRADE 70 rectangular mesh	for MOBISCREEN series	70 mm	Upper deck	Screen section, small	10 mm	1 pc.	M20001604
				for MOBISCREEN series	70 mm	Upper deck	Screen section, large	10 mm	2 pc.	M20001605
			QM-GRADE 8 rectangular mesh	for MOBISCREEN series	8 mm	Lower deck	Screen section, large	3 mm	1 pc.	2227634
			QM-GRADE 90 rectangular mesh	for MOBISCREEN series	90 mm	Upper deck	Screen section, small	10 mm	1 pc.	2227810
				for MOBISCREEN series	90 mm	Upper deck	Screen section, large	10 mm	2 pc.	2227783
MS 16 Z	K048	1 - 9999	QM-GRADE 10 rectangular mesh	for MOBISCREEN series	10 mm	Lower deck	Screen section, large	4 mm	2 pc.	2234498
				for MOBISCREEN series	10 mm	Upper/ middle deck	Screen section, large	3 mm	3 pc.	M20001496

WIRE MESH										
Series code	Serial code	Series range	Part	Version	Clear mesh size	Deck	Position	Wire diameter	Requirement	Part no.
MS 16 Z	K048	1 - 9999	QM-GRADE 10 rectangular mesh	for MOBI-SCREEN series	10 mm	Upper/ middle deck	Screen section, small	3 mm	1 pc.	M20001494
			QM-GRADE 12 rectangular mesh	for MOBI-SCREEN series	12 mm	Upper/ middle deck	Screen section, small	4 mm	1 pc.	2195240
				for MOBI-SCREEN series	12 mm	Upper/ middle deck	Screen section, large	4 mm	3 pc.	M20000872
				for MOBI-SCREEN series	12 mm	Lower deck	Screen section, large	4 mm	2 pc.	2234501
			QM-GRADE 14 rectangular mesh	for MOBI-SCREEN series	14 mm	Upper/ middle deck	Screen section, small	4 mm	1 pc.	2195335
				for MOBI-SCREEN series	14 mm	Lower deck	Screen section, large	3 mm	2 pc.	M20000864
				for MOBI-SCREEN series	14 mm	Upper/ middle deck	Screen section, large	4 mm	3 pc.	M20001027
			QM-GRADE 15 rectangular mesh	for MOBI-SCREEN series	15 mm	Lower deck	Screen section, large	4 mm	2 pc.	2201658
				for MOBI-SCREEN series	15 mm	Upper/ middle deck	Screen section, small	4 mm	1 pc.	2195338
				for MOBI-SCREEN series	15 mm	Upper/ middle deck	Screen section, large	4 mm	3 pc.	M20001735
			QM-GRADE 16 rectangular mesh	for MOBI-SCREEN series	16 mm	Upper/ middle deck	Screen section, large	4 mm	3 pc.	M20000833
				for MOBI-SCREEN series	16 mm	Upper/ middle deck	Screen section, small	4 mm	1 pc.	2195342

WIRE MESH										
Series code	Serial code	Series range	Part	Version	Clear mesh size	Deck	Position	Wire diameter	Requirement	Part no.
MS 16 Z	K048	1 - 9999	QM-GRADE 18 rectangular mesh	for MOBI-SCREEN series	18 mm	Upper/ middle deck	Screen section, large	4 mm	3 pc.	M20001327
				for MOBI-SCREEN series	18 mm	Upper/ middle deck	Screen section, small	4 mm	1 pc.	2195345
			QM-GRADE 20 rectangular mesh	for MOBI-SCREEN series	20 mm	Lower deck	Screen section, large	5 mm	2 pc.	M20001081
				for MOBI-SCREEN series	20 mm	Upper/ middle deck	Screen section, small	5 mm	1 pc.	2234505
				for MOBI-SCREEN series	20 mm	Upper/ middle deck	Screen section, large	5 mm	3 pc.	2234507
			QM-GRADE 22 rectangular mesh	for MOBI-SCREEN series	22 mm	Lower deck	Screen section, large	5 mm	2 pc.	M20001591
				for MOBI-SCREEN series	22 mm	Upper/ middle deck	Screen section, large	5 mm	3 pc.	M20000690
				for MOBI-SCREEN series	22 mm	Upper/ middle deck	Screen section, small	5 mm	1 pc.	M20000691
			QM-GRADE 25 rectangular mesh	for MOBI-SCREEN series	25 mm	Upper/ middle deck	Screen section, small	5 mm	1 pc.	M20001769
				for MOBI-SCREEN series	25 mm	Lower deck	Screen section, large	5 mm	2 pc.	M20000693
				for MOBI-SCREEN series	25 mm	Upper/ middle deck	Screen section, large	5 mm	3 pc.	M20000958
			QM-GRADE 28 rectangular mesh	for MOBI-SCREEN series	28 mm	Upper/ middle deck	Screen section, small	6 mm	1 pc.	2195355
				for MOBI-SCREEN series	28 mm	Upper/ middle deck	Screen section, large	6 mm	3 pc.	M20001629

WIRE MESH										
Series code	Serial code	Series range	Part	Version	Clear mesh size	Deck	Position	Wire diameter	Requirement	Part no.
MS 16 Z	K048	1 - 9999	QM-GRADE 30 rectangular mesh	for MOBISCREEN series	30 mm	Upper/ middle deck	Screen section, large	8 mm	3 pc.	2234516
				for MOBISCREEN series	30 mm	Upper/ middle deck	Screen section, small	8 mm	1 pc.	2234515
			QM-GRADE 35 rectangular mesh	for MOBISCREEN series	35 mm	Lower deck	Screen section, large	6 mm	2 pc.	2402975
				for MOBISCREEN series	35 mm	Upper/ middle deck	Screen section, small	8 mm	1 pc.	M20001726
				for MOBISCREEN series	35 mm	Upper/ middle deck	Screen section, large	8 mm	3 pc.	M20001727
			QM-GRADE 40 rectangular mesh	for MOBISCREEN series	40 mm	Lower deck	Screen section, large	8 mm	2 pc.	M20000832
				for MOBISCREEN series	40 mm	Upper/ middle deck	Screen section, large	8 mm	3 pc.	M20000625
				for MOBISCREEN series	40 mm	Upper/ middle deck	Screen section, small	8 mm	1 pc.	M20000626
			QM-GRADE 45 rectangular mesh	for MOBISCREEN series	45 mm	Upper/ middle deck	Screen section, large	8 mm	3 pc.	M20000642
				for MOBISCREEN series	45 mm	Lower deck	Screen section, large	8 mm	2 pc.	2226556
				for MOBISCREEN series	45 mm	Upper/ middle deck	Screen section, small	8 mm	1 pc.	M20000643
			QM-GRADE 5 rectangular mesh	for MOBISCREEN series	5 mm	Lower deck	Screen section, large	2 mm	2 pc.	M20001308

WIRE MESH										
Series code	Serial code	Series range	Part	Version	Clear mesh size	Deck	Position	Wire diameter	Requirement	Part no.
MS 16 Z	K048	1 - 9999	QM-GRADE 50 rectangular mesh	for MOBISCREEN series	50 mm	Upper/ middle deck	Screen section, large	10 mm	3 pc.	M20000686
				for MOBISCREEN series	50 mm	Upper/ middle deck	Screen section, small	10 mm	1 pc.	M20000687
				for MOBISCREEN series	50 mm	Lower deck	Screen section, large	8 mm	2 pc.	M20000817
			QM-GRADE 55 rectangular mesh	for MOBISCREEN series	55 mm	Upper/ middle deck	Screen section, small	10 mm	1 pc.	M20000628
				for MOBISCREEN series	55 mm	Upper/ middle deck	Screen section, large	10 mm	3 pc.	M20000627
			QM-GRADE 60 rectangular mesh	for MOBISCREEN series	60 mm	Upper/ middle deck	Screen section, large	10 mm	3 pc.	M20001065
				for MOBISCREEN series	60 mm	Upper/ middle deck	Screen section, small	10 mm	1 pc.	M20001066
			QM-GRADE 65 rectangular mesh	for MOBISCREEN series	65 mm	Upper/ middle deck	Screen section, large	10 mm	3 pc.	M20000688
				for MOBISCREEN series	65 mm	Upper/ middle deck	Screen section, small	10 mm	1 pc.	M20000689
			QM-GRADE 70 rectangular mesh	for MOBISCREEN series	70 mm	Upper/ middle deck	Screen section, large	10 mm	3 pc.	M20001400
				for MOBISCREEN series	70 mm	Upper/ middle deck	Screen section, small	10 mm	1 pc.	M20001399
			QM-GRADE 8 rectangular mesh	for MOBISCREEN series	8 mm	Lower deck	Screen section, large	3 mm	2 pc.	M20000761

WIRE MESH										
Series code	Serial code	Series range	Part	Version	Clear mesh size	Deck	Position	Wire diameter	Requirement	Part no.
MS 16 Z	K048	1 - 9999	QM-GRADE 80 rectangular mesh	for MOBISCREEN series	80 mm	Upper/ middle deck	Screen section, small	10 mm	1 pc.	2218853
				for MOBISCREEN series	80 mm	Upper/ middle deck	Screen section, large	10 mm	3 pc.	2218851
MS 16 D	K049	1 - 9999	QM-GRADE 10 rectangular mesh	for MOBISCREEN series	10 mm	Upper/ middle deck	Screen section, small	3 mm	1 pc.	M20001494
				for MOBISCREEN series	10 mm	Lower deck	Screen section, large	4 mm	2 pc.	2234498
				for MOBISCREEN series	10 mm	Upper/ middle deck	Screen section, large	3 mm	3 pc.	M20001496
			QM-GRADE 12 rectangular mesh	for MOBISCREEN series	12 mm	Upper/ middle deck	Screen section, small	4 mm	1 pc.	2195240
				for MOBISCREEN series	12 mm	Upper/ middle deck	Screen section, large	4 mm	3 pc.	M20000872
				for MOBISCREEN series	12 mm	Lower deck	Screen section, large	4 mm	2 pc.	2234501
			QM-GRADE 14 rectangular mesh	for MOBISCREEN series	14 mm	Lower deck	Screen section, large	3 mm	2 pc.	M20000864
				for MOBISCREEN series	14 mm	Upper/ middle deck	Screen section, large	4 mm	3 pc.	M20001027
				for MOBISCREEN series	14 mm	Upper/ middle deck	Screen section, small	4 mm	1 pc.	2195335
			QM-GRADE 15 rectangular mesh	for MOBISCREEN series	15 mm	Upper/ middle deck	Screen section, small	4 mm	1 pc.	2195338
				for MOBISCREEN series	15 mm	Upper/ middle deck	Screen section, large	4 mm	3 pc.	M20001735

WIRE MESH										
Series code	Serial code	Series range	Part	Version	Clear mesh size	Deck	Position	Wire diameter	Requirement	Part no.
MS 16 D	K049	1 - 9999	QM-GRADE 15 rectangular mesh	for MOBI-SCREEN series	15 mm	Lower deck	Screen section, large	4 mm	2 pc.	2201658
			QM-GRADE 16 rectangular mesh	for MOBI-SCREEN series	16 mm	Upper/ middle deck	Screen section, small	4 mm	1 pc.	2195342
				for MOBI-SCREEN series	16 mm	Upper/ middle deck	Screen section, large	4 mm	3 pc.	M20000833
			QM-GRADE 18 rectangular mesh	for MOBI-SCREEN series	18 mm	Upper/ middle deck	Screen section, large	4 mm	3 pc.	M20001327
				for MOBI-SCREEN series	18 mm	Upper/ middle deck	Screen section, small	4 mm	1 pc.	2195345
			QM-GRADE 20 rectangular mesh	for MOBI-SCREEN series	20 mm	Upper/ middle deck	Screen section, small	5 mm	1 pc.	2234505
				for MOBI-SCREEN series	20 mm	Upper/ middle deck	Screen section, large	5 mm	3 pc.	2234507
				for MOBI-SCREEN series	20 mm	Lower deck	Screen section, large	5 mm	2 pc.	M20001081
			QM-GRADE 22 rectangular mesh	for MOBI-SCREEN series	22 mm	Upper/ middle deck	Screen section, small	5 mm	1 pc.	M20000691
				for MOBI-SCREEN series	22 mm	Lower deck	Screen section, large	5 mm	2 pc.	M20001591
				for MOBI-SCREEN series	22 mm	Upper/ middle deck	Screen section, large	5 mm	3 pc.	M20000690

WIRE MESH										
Series code	Serial code	Series range	Part	Version	Clear mesh size	Deck	Position	Wire diameter	Requirement	Part no.
MS 16 D	K049	1 - 9999	QM-GRADE 25 rectangular mesh	for MOBISCREEN series	25 mm	Upper/ middle deck	Screen section, large	5 mm	3 pc.	M20000958
				for MOBISCREEN series	25 mm	Upper/ middle deck	Screen section, small	5 mm	1 pc.	M20001769
				for MOBISCREEN series	25 mm	Lower deck	Screen section, large	5 mm	2 pc.	M20000693
			QM-GRADE 28 rectangular mesh	for MOBISCREEN series	28 mm	Upper/ middle deck	Screen section, small	6 mm	1 pc.	2195355
				for MOBISCREEN series	28 mm	Upper/ middle deck	Screen section, large	6 mm	3 pc.	M20001629
			QM-GRADE 30 rectangular mesh	for MOBISCREEN series	30 mm	Upper/ middle deck	Screen section, large	8 mm	3 pc.	2234516
				for MOBISCREEN series	30 mm	Upper/ middle deck	Screen section, small	8 mm	1 pc.	2234515
			QM-GRADE 35 rectangular mesh	for MOBISCREEN series	35 mm	Lower deck	Screen section, large	6 mm	2 pc.	2402975
				for MOBISCREEN series	35 mm	Upper/ middle deck	Screen section, large	8 mm	3 pc.	M20001727
				for MOBISCREEN series	35 mm	Upper/ middle deck	Screen section, small	8 mm	1 pc.	M20001726
			QM-GRADE 40 rectangular mesh	for MOBISCREEN series	40 mm	Lower deck	Screen section, large	8 mm	2 pc.	M20000832
				for MOBISCREEN series	40 mm	Upper/ middle deck	Screen section, small	8 mm	1 pc.	M20000626
				for MOBISCREEN series	40 mm	Upper/ middle deck	Screen section, large	8 mm	3 pc.	M20000625

WIRE MESH										
Series code	Serial code	Series range	Part	Version	Clear mesh size	Deck	Position	Wire diameter	Requirement	Part no.
MS 16 D	K049	1 - 9999	QM-GRADE 45 rectangular mesh	for MOBISCREEN series	45 mm	Lower deck	Screen section, large	8 mm	2 pc.	2226556
				for MOBISCREEN series	45 mm	Upper/middle deck	Screen section, large	8 mm	3 pc.	M20000642
				for MOBISCREEN series	45 mm	Upper/middle deck	Screen section, small	8 mm	1 pc.	M20000643
			QM-GRADE 5 rectangular mesh	for MOBISCREEN series	5 mm	Lower deck	Screen section, large	2 mm	2 pc.	M20001308
			QM-GRADE 50 rectangular mesh	for MOBISCREEN series	50 mm	Lower deck	Screen section, large	8 mm	2 pc.	M20000817
				for MOBISCREEN series	50 mm	Upper/middle deck	Screen section, small	10 mm	1 pc.	M20000687
				for MOBISCREEN series	50 mm	Upper/middle deck	Screen section, large	10 mm	3 pc.	M20000686
			QM-GRADE 55 rectangular mesh	for MOBISCREEN series	55 mm	Upper/middle deck	Screen section, small	10 mm	1 pc.	M20000628
				for MOBISCREEN series	55 mm	Upper/middle deck	Screen section, large	10 mm	3 pc.	M20000627
			QM-GRADE 60 rectangular mesh	for MOBISCREEN series	60 mm	Upper/middle deck	Screen section, small	10 mm	1 pc.	M20001066
				for MOBISCREEN series	60 mm	Upper/middle deck	Screen section, large	10 mm	3 pc.	M20001065

WIRE MESH										
Series code	Serial code	Series range	Part	Version	Clear mesh size	Deck	Position	Wire diameter	Requirement	Part no.
MS 16 D	K049	1 - 9999	QM-GRADE 65 rectangular mesh	for MOBISCREEN series	65 mm	Upper/ middle deck	Screen section, large	10 mm	3 pc.	M20000688
				for MOBISCREEN series	65 mm	Upper/ middle deck	Screen section, small	10 mm	1 pc.	M20000689
			QM-GRADE 70 rectangular mesh	for MOBISCREEN series	70 mm	Upper/ middle deck	Screen section, small	10 mm	1 pc.	M20001399
				for MOBISCREEN series	70 mm	Upper/ middle deck	Screen section, large	10 mm	3 pc.	M20001400
			QM-GRADE 8 rectangular mesh	for MOBISCREEN series	8 mm	Lower deck	Screen section, large	3 mm	2 pc.	M20000761
			QM-GRADE 80 rectangular mesh	for MOBISCREEN series	80 mm	Upper/ middle deck	Screen section, large	10 mm	3 pc.	2218851
				for MOBISCREEN series	80 mm	Upper/ middle deck	Screen section, small	10 mm	1 pc.	2218853
MS 19 Z	K054	1 - 9999	QM-GRADE 10 rectangular mesh	for MOBISCREEN series	10 mm	Lower deck	Screen section, large	4 mm	3 pc.	2234498
				for MOBISCREEN series	10 mm	Upper/ middle deck	Screen section, large	3 mm	5 pc.	M20001496
			QM-GRADE 12 rectangular mesh	for MOBISCREEN series	12 mm	Upper/ middle deck	Screen section, large	4 mm	5 pc.	M20000872
				for MOBISCREEN series	12 mm	Lower deck	Screen section, large	4 mm	3 pc.	2234501
			QM-GRADE 13 rectangular mesh	for MOBISCREEN series	13 mm	Upper/ middle deck	Screen section, large	4 mm	5 pc.	M20000621

WIRE MESH										
Series code	Serial code	Series range	Part	Version	Clear mesh size	Deck	Position	Wire diameter	Requirement	Part no.
MS 19 Z	K054	1 - 9999	QM-GRADE 14 rectangular mesh	for MOBISCREEN series	14 mm	Upper/ middle deck	Screen section, large	4 mm	5 pc.	M20001027
				for MOBISCREEN series	14 mm	Lower deck	Screen section, large	3 mm	3 pc.	M20000864
			QM-GRADE 15 rectangular mesh	for MOBISCREEN series	15 mm	Upper/ middle deck	Screen section, large	4 mm	5 pc.	M20001735
				for MOBISCREEN series	15 mm	Lower deck	Screen section, large	4 mm	3 pc.	2201658
			QM-GRADE 16 rectangular mesh	for MOBISCREEN series	16 mm	Upper/ middle deck	Screen section, large	4 mm	5 pc.	M20000833
			QM-GRADE 18 rectangular mesh	for MOBISCREEN series	18 mm	Upper/ middle deck	Screen section, large	4 mm	5 pc.	M20001327
			QM-GRADE 20 rectangular mesh	for MOBISCREEN series	20 mm	Lower deck	Screen section, large	5 mm	3 pc.	M20001081
				for MOBISCREEN series	20 mm	Upper/ middle deck	Screen section, large	5 mm	5 pc.	2234507
			QM-GRADE 22 rectangular mesh	for MOBISCREEN series	22 mm	Upper/ middle deck	Screen section, large	5 mm	5 pc.	M20000690
				for MOBISCREEN series	22 mm	Lower deck	Screen section, large	5 mm	3 pc.	M20001591
			QM-GRADE 25 rectangular mesh	for MOBISCREEN series	25 mm	Lower deck	Screen section, large	5 mm	3 pc.	M20000693
				for MOBISCREEN series	25 mm	Upper/ middle deck	Screen section, large	5 mm	5 pc.	M20000958

WIRE MESH

Series code	Serial code	Series range	Part	Version	Clear mesh size	Deck	Position	Wire diameter	Requirement	Part no.
MS 19 Z	K054	1 - 9999	QM-GRADE 28 rectangular mesh	for MOBI-SCREEN series	28 mm	Upper/ middle deck	Screen section, large	6 mm	5 pc.	M20001629
			QM-GRADE 30 rectangular mesh	for MOBI-SCREEN series	30 mm	Upper/ middle deck	Screen section, large	8 mm	5 pc.	2234516
			QM-GRADE 32 rectangular mesh	for MOBI-SCREEN series	32 mm	Upper/ middle deck	Screen section, large	7 mm	5 pc.	M20001498
			QM-GRADE 35 rectangular mesh	for MOBI-SCREEN series	35 mm	Lower deck	Screen section, large	6 mm	3 pc.	2402975
				for MOBI-SCREEN series	35 mm	Upper/ middle deck	Screen section, large	8 mm	5 pc.	M20001727
			QM-GRADE 40 rectangular mesh	for MOBI-SCREEN series	40 mm	Lower deck	Screen section, large	8 mm	3 pc.	M20000832
				for MOBI-SCREEN series	40 mm	Upper/ middle deck	Screen section, large	8 mm	5 pc.	M20000625
			QM-GRADE 45 rectangular mesh	for MOBI-SCREEN series	45 mm	Lower deck	Screen section, large	8 mm	3 pc.	2226556
				for MOBI-SCREEN series	45 mm	Upper/ middle deck	Screen section, large	8 mm	5 pc.	M20000642
			QM-GRADE 5 rectangular mesh	for MOBI-SCREEN series	5 mm	Lower deck	Screen section, large	2 mm	3 pc.	M20001308

WIRE MESH										
Series code	Serial code	Series range	Part	Version	Clear mesh size	Deck	Position	Wire diameter	Requirement	Part no.
MS 19 Z	K054	1 - 9999	QM-GRADE 50 rectangular mesh	for MOBI-SCREEN series	50 mm	Upper/ middle deck	Screen section, large	10 mm	5 pc.	M20000686
				for MOBI-SCREEN series	50 mm	Lower deck	Screen section, large	8 mm	3 pc.	M20000817
			QM-GRADE 55 rectangular mesh	for MOBI-SCREEN series	55 mm	Upper/ middle deck	Screen section, large	10 mm	5 pc.	M20000627
			QM-GRADE 60 rectangular mesh	for MOBI-SCREEN series	60 mm	Upper/ middle deck	Screen section, large	10 mm	5 pc.	M20001065
			QM-GRADE 65 rectangular mesh	for MOBI-SCREEN series	65 mm	Upper/ middle deck	Screen section, large	10 mm	5 pc.	M20000688
			QM-GRADE 70 rectangular mesh	for MOBI-SCREEN series	70 mm	Upper/ middle deck	Screen section, large	10 mm	5 pc.	M20001400
			QM-GRADE 8 rectangular mesh	for MOBI-SCREEN series	8 mm	Lower deck	Screen section, large	3 mm	3 pc.	M20000761
				for MOBI-SCREEN series	8 mm	Upper/ middle deck	Screen section, large	3 mm	5 pc.	M10022614
			QM-GRADE 80 rectangular mesh	for MOBI-SCREEN series	80 mm	Upper/ middle deck	Screen section, large	10 mm	5 pc.	2218851

WIRE MESH										
Series code	Serial code	Series range	Part	Version	Clear mesh size	Deck	Position	Wire diameter	Requirement	Part no.
MS 19 D	K055	1 - 9999	QM-GRADE 10 rectangular mesh	for MOBI-SCREEN series	10 mm	Upper/ middle deck	Screen section, large	3 mm	5 pc.	M20001496
				for MOBI-SCREEN series	10 mm	Lower deck	Screen section, large	4 mm	3 pc.	2234498
			QM-GRADE 12 rectangular mesh	for MOBI-SCREEN series	12 mm	Upper/ middle deck	Screen section, large	4 mm	5 pc.	M20000872
				for MOBI-SCREEN series	12 mm	Lower deck	Screen section, large	4 mm	3 pc.	2234501
			QM-GRADE 13 rectangular mesh	for MOBI-SCREEN series	13 mm	Upper/ middle deck	Screen section, large	4 mm	5 pc.	M20000621
			QM-GRADE 14 rectangular mesh	for MOBI-SCREEN series	14 mm	Lower deck	Screen section, large	3 mm	3 pc.	M20000864
				for MOBI-SCREEN series	14 mm	Upper/ middle deck	Screen section, large	4 mm	5 pc.	M20001027
			QM-GRADE 15 rectangular mesh	for MOBI-SCREEN series	15 mm	Upper/ middle deck	Screen section, large	4 mm	5 pc.	M20001735
				for MOBI-SCREEN series	15 mm	Lower deck	Screen section, large	4 mm	3 pc.	2201658
			QM-GRADE 16 rectangular mesh	for MOBI-SCREEN series	16 mm	Upper/ middle deck	Screen section, large	4 mm	5 pc.	M20000833
			QM-GRADE 18 rectangular mesh	for MOBI-SCREEN series	18 mm	Upper/ middle deck	Screen section, large	4 mm	5 pc.	M20001327

WIRE MESH										
Series code	Serial code	Series range	Part	Version	Clear mesh size	Deck	Position	Wire diameter	Requirement	Part no.
MS 19 D	K055	1 - 9999	QM-GRADE 20 rectangular mesh	for MOBISCREEN series	20 mm	Upper/ middle deck	Screen section, large	5 mm	5 pc.	2234507
				for MOBISCREEN series	20 mm	Lower deck	Screen section, large	5 mm	3 pc.	M20001081
			QM-GRADE 22 rectangular mesh	for MOBISCREEN series	22 mm	Lower deck	Screen section, large	5 mm	3 pc.	M20001591
				for MOBISCREEN series	22 mm	Upper/ middle deck	Screen section, large	5 mm	5 pc.	M20000690
			QM-GRADE 25 rectangular mesh	for MOBISCREEN series	25 mm	Upper/ middle deck	Screen section, large	5 mm	5 pc.	M20000958
				for MOBISCREEN series	25 mm	Lower deck	Screen section, large	5 mm	3 pc.	M20000693
			QM-GRADE 28 rectangular mesh	for MOBISCREEN series	28 mm	Upper/ middle deck	Screen section, large	6 mm	5 pc.	M20001629
			QM-GRADE 30 rectangular mesh	for MOBISCREEN series	30 mm	Upper/ middle deck	Screen section, large	8 mm	5 pc.	2234516
			QM-GRADE 32 rectangular mesh	for MOBISCREEN series	32 mm	Upper/ middle deck	Screen section, large	7 mm	5 pc.	M20001498
			QM-GRADE 35 rectangular mesh	for MOBISCREEN series	35 mm	Upper/ middle deck	Screen section, large	8 mm	5 pc.	M20001727
				for MOBISCREEN series	35 mm	Lower deck	Screen section, large	6 mm	3 pc.	2402975

WIRE MESH										
Series code	Serial code	Series range	Part	Version	Clear mesh size	Deck	Position	Wire diameter	Requirement	Part no.
MS 19 D	K055	1 - 9999	QM-GRADE 40 rectangular mesh	for MOBI-SCREEN series	40 mm	Upper/ middle deck	Screen section, large	8 mm	5 pc.	M20000625
				for MOBI-SCREEN series	40 mm	Lower deck	Screen section, large	8 mm	3 pc.	M20000832
			QM-GRADE 45 rectangular mesh	for MOBI-SCREEN series	45 mm	Lower deck	Screen section, large	8 mm	3 pc.	2226556
				for MOBI-SCREEN series	45 mm	Upper/ middle deck	Screen section, large	8 mm	5 pc.	M20000642
			QM-GRADE 5 rectangular mesh	for MOBI-SCREEN series	5 mm	Lower deck	Screen section, large	2 mm	3 pc.	M20001308
			QM-GRADE 50 rectangular mesh	for MOBI-SCREEN series	50 mm	Lower deck	Screen section, large	8 mm	3 pc.	M20000817
				for MOBI-SCREEN series	50 mm	Upper/ middle deck	Screen section, large	10 mm	5 pc.	M20000686
			QM-GRADE 55 rectangular mesh	for MOBI-SCREEN series	55 mm	Upper/ middle deck	Screen section, large	10 mm	5 pc.	M20000627
			QM-GRADE 60 rectangular mesh	for MOBI-SCREEN series	60 mm	Upper/ middle deck	Screen section, large	10 mm	5 pc.	M20001065
			QM-GRADE 65 rectangular mesh	for MOBI-SCREEN series	65 mm	Upper/ middle deck	Screen section, large	10 mm	5 pc.	M20000688

WIRE MESH										
Series code	Serial code	Series range	Part	Version	Clear mesh size	Deck	Position	Wire diameter	Requirement	Part no.
MS 19 D	K055	1 - 9999	QM-GRADE 70 rectangular mesh	for MOBI-SCREEN series	70 mm	Upper/ middle deck	Screen section, large	10 mm	5 pc.	M20001400
			QM-GRADE 8 rectangular mesh	for MOBI-SCREEN series	8 mm	Upper/ middle deck	Screen section, large	3 mm	5 pc.	M10022614
				for MOBI-SCREEN series	8 mm	Lower deck	Screen section, large	3 mm	3 pc.	M20000761
			QM-GRADE 80 rectangular mesh	for MOBI-SCREEN series	80 mm	Upper/ middle deck	Screen section, large	10 mm	5 pc.	2218851
MSS 1102 PRO	K076	1 - 9999	QM-GRADE 10 rectangular mesh	for MOBI-SCREEN series	10 mm	Lower deck	Screen section, large	4 mm	3 pc.	2298740
			QM-GRADE 100 rectangular mesh	for MOBI-SCREEN series	100 mm	Upper deck	Screen section, large	10 mm	5 pc.	2298710
			QM-GRADE 12 rectangular mesh	for MOBI-SCREEN series	12 mm	Lower deck	Screen section, large	4 mm	3 pc.	2298742
			QM-GRADE 15 rectangular mesh	for MOBI-SCREEN series	15 mm	Lower deck	Screen section, large	4 mm	3 pc.	2298743
			QM-GRADE 20 rectangular mesh	for MOBI-SCREEN series	20 mm	Lower deck	Screen section, large	5 mm	3 pc.	2298744

WIRE MESH

Series code	Serial code	Series range	Part	Version	Clear mesh size	Deck	Position	Wire diameter	Requirement	Part no.
MSS 1102 PRO	K076	1 - 9999	QM-GRADE 25 rectangular mesh	for MOBI-SCREEN series	25 mm	Lower deck	Screen section, large	6 mm	3 pc.	2298745
			QM-GRADE 30 rectangular mesh	for MOBI-SCREEN series	30 mm	Lower deck	Screen section, large	6 mm	3 pc.	2298746
			QM-GRADE 35 rectangular mesh	for MOBI-SCREEN series	35 mm	Lower deck	Screen section, large	8 mm	3 pc.	2298747
			QM-GRADE 40 rectangular mesh	for MOBI-SCREEN series	40 mm	Lower deck	Screen section, large	8 mm	3 pc.	2298748
			QM-GRADE 50 rectangular mesh	for MOBI-SCREEN series	50 mm	Upper deck	Screen section, large	10 mm	5 pc.	2298699
				for MOBI-SCREEN series	50 mm	Lower deck	Screen section, large	8 mm	3 pc.	2298749
			QM-GRADE 55 rectangular mesh	for MOBI-SCREEN series	55 mm	Upper deck	Screen section, large	10 mm	5 pc.	2298700
				for MOBI-SCREEN series	55 mm	Lower deck	Screen section, large	10 mm	3 pc.	2693184
			QM-GRADE 60 rectangular mesh	for MOBI-SCREEN series	60 mm	Upper deck	Screen section, large	10 mm	5 pc.	2298701
			QM-GRADE 80 rectangular mesh	for MOBI-SCREEN series	80 mm	Upper deck	Screen section, large	10 mm	5 pc.	2298706

WIRE MESH										
Series code	Serial code	Series range	Part	Version	Clear mesh size	Deck	Position	Wire diameter	Requirement	Part no.
MSS 1102 PRO	K076	1 - 9999	QM-GRADE 90 rectangular mesh	for MOBISCREEN series	90 mm	Upper deck	Screen section, large	10 mm	5 pc.	2298709
MSC 702 EVO	K083	1 - 9999	QM-GRADE 10 rectangular mesh	for MOBISCREEN series	10 mm	Lower deck	Screen section, small	4 mm	1 pc.	2447196
				for MOBISCREEN series	10 mm	Upper/middle deck	Screen section, large	4 mm	2 pc.	2428276
				for MOBISCREEN series	10 mm	Lower deck	Screen section, large	4 mm	1 pc.	2453892
				For use with MOBISCREEN series and secondary screening units	10 mm	Upper/middle deck	Screen section, small	4 mm	2 pc.	2208580
			QM-GRADE 100 rectangular mesh	for MOBISCREEN series	100 mm	Upper/middle deck	Screen section, small	12 mm	2 pc.	2448952
				for MOBISCREEN series	100 mm	Upper/middle deck	Screen section, large	12 mm	2 pc.	2447154
			QM-GRADE 11 rectangular mesh	for MOBISCREEN series	11 mm	Lower deck	Screen section, small	4 mm	1 pc.	2447202
				for MOBISCREEN series	11 mm	Lower deck	Screen section, large	4 mm	1 pc.	2453894
				for MOBISCREEN series	11 mm	Upper/middle deck	Screen section, large	4 mm	2 pc.	2447085
				for MOBISCREEN series	11 mm	Upper/middle deck	Screen section, small	4 mm	2 pc.	2199916

WIRE MESH										
Series code	Serial code	Series range	Part	Version	Clear mesh size	Deck	Position	Wire diameter	Requirement	Part no.
MSC 702 EVO	K083	1 - 9999	QM-GRADE 12 rectangular mesh	for secondary screening units & Mobiscreen series	12 mm	Upper/ middle deck	Screen section, small	4 mm	2 pc.	2448849
				for MOBISCREEN series	12 mm	Lower deck	Screen section, large	4 mm	1 pc.	2453898
				for MOBISCREEN series	12 mm	Upper/ middle deck	Screen section, large	4 mm	2 pc.	2354096
				for MOBISCREEN series	12 mm	Lower deck	Screen section, small	4 mm	1 pc.	2447208
			QM-GRADE 15 rectangular mesh	for MOBISCREEN series	15 mm	Lower deck	Screen section, small	5 mm	1 pc.	2447216
				for MOBISCREEN series	15 mm	Upper/ middle deck	Screen section, large	5 mm	2 pc.	2447094
				for MOBISCREEN series	15 mm	Lower deck	Screen section, large	5 mm	1 pc.	2453901
				for MOBISCREEN series	15 mm	Upper/ middle deck	Screen section, small	5 mm	2 pc.	2448851
			QM-GRADE 16 rectangular mesh	for MOBISCREEN series	16 mm	Upper/ middle deck	Screen section, small	5 mm	2 pc.	2448852
				for MOBISCREEN series	16 mm	Upper/ middle deck	Screen section, large	5 mm	2 pc.	2447110
			QM-GRADE 18 rectangular mesh	for MOBISCREEN series	18 mm	Upper/ middle deck	Screen section, large	5 mm	2 pc.	2447118
				for MOBISCREEN series	18 mm	Upper/ middle deck	Screen section, small	5 mm	2 pc.	M10003800

WIRE MESH										
Series code	Serial code	Series range	Part	Version	Clear mesh size	Deck	Position	Wire diameter	Requirement	Part no.
MSC 702 EVO	K083	1 - 9999	QM-GRADE 20 rectangular mesh	for MOBI-SCREEN series	20 mm	Lower deck	Screen section, small	5 mm	1 pc.	2447222
				for MOBI-SCREEN series	20 mm	Lower deck	Screen section, large	5 mm	1 pc.	2453902
				for MOBI-SCREEN series	20 mm	Upper/ middle deck	Screen section, large	5 mm	2 pc.	2354095
				For use with MOBI-SCREEN series and secondary screening units	20 mm	Upper/ middle deck	Screen section, small	5 mm	2 pc.	M10003491
			QM-GRADE 22 rectangular mesh	for MOBI-SCREEN series	22 mm	Upper/ middle deck	Screen section, large	6.3 mm	2 pc.	2491562
			QM-GRADE 25 rectangular mesh	for MOBI-SCREEN series	25 mm	Lower deck	Screen section, small	6 mm	1 pc.	2447229
				for MOBI-SCREEN series	25 mm	Lower deck	Screen section, large	6 mm	1 pc.	2453919
				For use with MOBI-SCREEN series and secondary screening units	25 mm	Upper/ middle deck	Screen section, small	6 mm	2 pc.	M20001551
				for MOBI-SCREEN series	25 mm	Upper/ middle deck	Screen section, large	6 mm	2 pc.	2428275

WIRE MESH										
Series code	Serial code	Series range	Part	Version	Clear mesh size	Deck	Position	Wire diameter	Requirement	Part no.
MSC 702 EVO	K083	1 - 9999	QM-GRADE 28 rectangular mesh	For use with MOBI-SCREEN series and secondary screening units	28 mm	Upper/ middle deck	Screen section, small	6 mm	2 pc.	M20001713
				for MOBI-SCREEN series	28 mm	Upper/ middle deck	Screen section, large	6 mm	2 pc.	2593549
			QM-GRADE 30 rectangular mesh	for MOBI-SCREEN series	30 mm	Lower deck	Screen section, small	8 mm	1 pc.	2447231
				For use with MOBI-SCREEN series and secondary screening units	30 mm	Upper/ middle deck	Screen section, small	8 mm	2 pc.	2234476
				for MOBI-SCREEN series	30 mm	Upper/ middle deck	Screen section, large	8 mm	2 pc.	2447130
				for MOBI-SCREEN series	30 mm	Lower deck	Screen section, large	8 mm	1 pc.	2453927
			QM-GRADE 35 rectangular mesh	for MOBI-SCREEN series	35 mm	Lower deck	Screen section, small	8 mm	1 pc.	2456089
				for MOBI-SCREEN series	35 mm	Lower deck	Screen section, large	8 mm	1 pc.	2621531
				for MOBI-SCREEN series	35 mm	Upper/ middle deck	Screen section, large	8 mm	2 pc.	2354093
			QM-GRADE 38 rectangular mesh	for MOBI-SCREEN series	38 mm	Lower deck	Screen section, small	8 mm	1 pc.	2447233
				for MOBI-SCREEN series	38 mm	Upper/ middle deck	Screen section, small	8 mm	2 pc.	M10002485

WIRE MESH										
Series code	Serial code	Series range	Part	Version	Clear mesh size	Deck	Position	Wire diameter	Requirement	Part no.
MSC 702 EVO	K083	1 - 9999	QM-GRADE 38 rectangular mesh	for MOBI-SCREEN series	38 mm	Upper/ middle deck	Screen section, large	8 mm	2 pc.	2639254
				for MOBI-SCREEN series	38 mm	Lower deck	Screen section, large	8 mm	1 pc.	2453928
			QM-GRADE 40 rectangular mesh	for MOBI-SCREEN series	40 mm	Lower deck	Screen section, small	8 mm	1 pc.	2447234
				For use with MOBI-SCREEN series and secondary screening units	40 mm	Upper/ middle deck	Screen section, small	8 mm	2 pc.	M10005149
				for MOBI-SCREEN series	40 mm	Lower deck	Screen section, large	8 mm	1 pc.	2453931
				for MOBI-SCREEN series	40 mm	Upper/ middle deck	Screen section, large	8 mm	2 pc.	2447134
			QM-GRADE 45 rectangular mesh	For use with MOBI-SCREEN series and secondary screening units	45 mm	Upper/ middle deck	Screen section, small	8 mm	2 pc.	M20001595
				for MOBI-SCREEN series	45 mm	Upper/ middle deck	Screen section, large	8 mm	2 pc.	2354091
			QM-GRADE 50 rectangular mesh	For use with MOBI-SCREEN series and secondary screening units	50 mm	Upper/ middle deck	Screen section, small	10 mm	2 pc.	M20001298
				for MOBI-SCREEN series	50 mm	Lower deck	Screen section, small	10 mm	1 pc.	2447236

WIRE MESH										
Series code	Serial code	Series range	Part	Version	Clear mesh size	Deck	Position	Wire diameter	Requirement	Part no.
MSC 702 EVO	K083	1 - 9999	QM-GRADE 50 rectangular mesh	for MOBI-SCREEN series	50 mm	Lower deck	Screen section, large	10 mm	1 pc.	2453933
				for MOBI-SCREEN series	50 mm	Upper/ middle deck	Screen section, large	10 mm	2 pc.	2447141
			QM-GRADE 55 rectangular mesh	for MOBI-SCREEN series	55 mm	Upper/ middle deck	Screen section, large	10 mm	2 pc.	2447143
				For use with MOBI-SCREEN series and secondary screening units	55 mm	Upper/ middle deck	Screen section, small	10 mm	2 pc.	M20001553
			QM-GRADE 60 rectangular mesh	for MOBI-SCREEN series	60 mm	Upper/ middle deck	Screen section, large	10 mm	2 pc.	2447147
				For use with MOBI-SCREEN series and secondary screening units	60 mm	Upper/ middle deck	Screen section, small	10 mm	2 pc.	M20001555
			QM-GRADE 65 rectangular mesh	For use with MOBI-SCREEN series and secondary screening units	65 mm	Upper/ middle deck	Screen section, small	10 mm	2 pc.	M10010425
				for MOBI-SCREEN series	65 mm	Upper/ middle deck	Screen section, large	10 mm	2 pc.	2447148
			QM-GRADE 7 rectangular mesh	for MOBI-SCREEN series	7 mm	Lower deck	Screen section, small	3 mm	1 pc.	2447173
				for MOBI-SCREEN series	7 mm	Upper/ middle deck	Screen section, large	3 mm	2 pc.	2447170

WIRE MESH										
Series code	Serial code	Series range	Part	Version	Clear mesh size	Deck	Position	Wire diameter	Requirement	Part no.
MSC 702 EVO	K083	1 - 9999	QM-GRADE 7 rectangular mesh	for MOBI-SCREEN series	7 mm	Upper/ middle deck	Screen section, small	3 mm	2 pc.	2448953
				for MOBI-SCREEN series	7 mm	Lower deck	Screen section, large	3 mm	1 pc.	2453886
			QM-GRADE 70 rectangular mesh	for MOBI-SCREEN series	70 mm	Upper/ middle deck	Screen section, large	10 mm	2 pc.	2447150
				For use with MOBI-SCREEN series and secondary screening units	70 mm	Upper/ middle deck	Screen section, small	10 mm	2 pc.	M20001752
			QM-GRADE 75 rectangular mesh	for MOBI-SCREEN series	75 mm	Upper/ middle deck	Screen section, large	10 mm	2 pc.	2354086
				for MOBI-SCREEN series	75 mm	Upper/ middle deck	Screen section, small	10 mm	2 pc.	2448949
			QM-GRADE 8 rectangular mesh	for MOBI-SCREEN series	8 mm	Lower deck	Screen section, small	3 mm	1 pc.	2447186
				For use with MOBI-SCREEN series and secondary screening units	8 mm	Upper/ middle deck	Screen section, small	3 mm	2 pc.	2348799
				for MOBI-SCREEN series	8 mm	Lower deck	Screen section, large	3 mm	1 pc.	2453889
				for MOBI-SCREEN series	8 mm	Upper/ middle deck	Screen section, large	3 mm	2 pc.	2447171

WIRE MESH										
Series code	Serial code	Series range	Part	Version	Clear mesh size	Deck	Position	Wire diameter	Requirement	Part no.
MSC 702 EVO	K083	1 - 9999	QM-GRADE 9 rectangular mesh	for MOBI-SCREEN series	9 mm	Lower deck	Screen section, small	3 mm	1 pc.	2447190
				for MOBI-SCREEN series	9 mm	Lower deck	Screen section, large	3 mm	1 pc.	2453891
			QM-GRADE 90 rectangular mesh	for MOBI-SCREEN series	90 mm	Upper/ middle deck	Screen section, small	12 mm	2 pc.	2448951
				for MOBI-SCREEN series	90 mm	Upper/ middle deck	Screen section, large	12 mm	2 pc.	2447153
MSC 702i EVO	K103	1 - 9999	QM-GRADE 10 rectangular mesh	For use with MOBI-SCREEN series and secondary screening units	10 mm	Upper/ middle deck	Screen section, small	4 mm	2 pc.	2208580
				for MOBI-SCREEN series	10 mm	Lower deck	Screen section, large	4 mm	1 pc.	2453892
				for MOBI-SCREEN series	10 mm	Lower deck	Screen section, small	4 mm	1 pc.	2447196
				for MOBI-SCREEN series	10 mm	Upper/ middle deck	Screen section, large	4 mm	2 pc.	2428276
			QM-GRADE 100 rectangular mesh	for MOBI-SCREEN series	100 mm	Upper/ middle deck	Screen section, large	12 mm	2 pc.	2447154
				for MOBI-SCREEN series	100 mm	Upper/ middle deck	Screen section, small	12 mm	2 pc.	2448952
			QM-GRADE 11 rectangular mesh	for MOBI-SCREEN series	11 mm	Upper/ middle deck	Screen section, small	4 mm	2 pc.	2199916
				for MOBI-SCREEN series	11 mm	Lower deck	Screen section, large	4 mm	1 pc.	2453894

WIRE MESH										
Series code	Serial code	Series range	Part	Version	Clear mesh size	Deck	Position	Wire diameter	Requirement	Part no.
MSC 702i EVO	K103	1 - 9999	QM-GRADE 11 rectangular mesh	for MOBISCREEN series	11 mm	Upper/ middle deck	Screen section, large	4 mm	2 pc.	2447085
				for MOBISCREEN series	11 mm	Lower deck	Screen section, small	4 mm	1 pc.	2447202
			QM-GRADE 12 rectangular mesh	for secondary screening units & Mobiscreen series	12 mm	Upper/ middle deck	Screen section, small	4 mm	2 pc.	2448849
				for MOBISCREEN series	12 mm	Lower deck	Screen section, small	4 mm	1 pc.	2447208
				for MOBISCREEN series	12 mm	Upper/ middle deck	Screen section, large	4 mm	2 pc.	2354096
				for MOBISCREEN series	12 mm	Lower deck	Screen section, large	4 mm	1 pc.	2453898
			QM-GRADE 15 rectangular mesh	for MOBISCREEN series	15 mm	Lower deck	Screen section, small	5 mm	1 pc.	2447216
				for MOBISCREEN series	15 mm	Upper/ middle deck	Screen section, small	5 mm	2 pc.	2448851
				for MOBISCREEN series	15 mm	Upper/ middle deck	Screen section, large	5 mm	2 pc.	2447094
				for MOBISCREEN series	15 mm	Lower deck	Screen section, large	5 mm	1 pc.	2453901
			QM-GRADE 16 rectangular mesh	for MOBISCREEN series	16 mm	Upper/ middle deck	Screen section, small	5 mm	2 pc.	2448852
				for MOBISCREEN series	16 mm	Upper/ middle deck	Screen section, large	5 mm	2 pc.	2447110

WIRE MESH										
Series code	Serial code	Series range	Part	Version	Clear mesh size	Deck	Position	Wire diameter	Requirement	Part no.
MSC 702i EVO	K103	1 - 9999	QM-GRADE 18 rectangular mesh	for MOBI-SCREEN series	18 mm	Upper/ middle deck	Screen section, small	5 mm	2 pc.	M10003800
				for MOBI-SCREEN series	18 mm	Upper/ middle deck	Screen section, large	5 mm	2 pc.	2447118
			QM-GRADE 20 rectangular mesh	for MOBI-SCREEN series	20 mm	Lower deck	Screen section, large	5 mm	1 pc.	2453902
				For use with MOBI-SCREEN series and secondary screening units	20 mm	Upper/ middle deck	Screen section, small	5 mm	2 pc.	M10003491
				for MOBI-SCREEN series	20 mm	Upper/ middle deck	Screen section, large	5 mm	2 pc.	2354095
				for MOBI-SCREEN series	20 mm	Lower deck	Screen section, small	5 mm	1 pc.	2447222
			QM-GRADE 22 rectangular mesh	for MOBI-SCREEN series	22 mm	Upper/ middle deck	Screen section, large	6.3 mm	2 pc.	2491562
			QM-GRADE 25 rectangular mesh	for MOBI-SCREEN series	25 mm	Lower deck	Screen section, large	6 mm	1 pc.	2453919
				for MOBI-SCREEN series	25 mm	Lower deck	Screen section, small	6 mm	1 pc.	2447229
				for MOBI-SCREEN series	25 mm	Upper/ middle deck	Screen section, large	6 mm	2 pc.	2428275

WIRE MESH										
Series code	Serial code	Series range	Part	Version	Clear mesh size	Deck	Position	Wire diameter	Requirement	Part no.
MSC 702i EVO	K103	1 - 9999	QM-GRADE 25 rectangular mesh	For use with MOBI-SCREEN series and secondary screening units	25 mm	Upper/ middle deck	Screen section, small	6 mm	2 pc.	M20001551
			QM-GRADE 28 rectangular mesh	For use with MOBI-SCREEN series and secondary screening units	28 mm	Upper/ middle deck	Screen section, small	6 mm	2 pc.	M20001713
				for MOBI-SCREEN series	28 mm	Upper/ middle deck	Screen section, large	6 mm	2 pc.	2593549
			QM-GRADE 30 rectangular mesh	for MOBI-SCREEN series	30 mm	Lower deck	Screen section, large	8 mm	1 pc.	2453927
				for MOBI-SCREEN series	30 mm	Lower deck	Screen section, small	8 mm	1 pc.	2447231
				for MOBI-SCREEN series	30 mm	Upper/ middle deck	Screen section, large	8 mm	2 pc.	2447130
				For use with MOBI-SCREEN series and secondary screening units	30 mm	Upper/ middle deck	Screen section, small	8 mm	2 pc.	2234476
			QM-GRADE 35 rectangular mesh	for MOBI-SCREEN series	35 mm	Lower deck	Screen section, large	8 mm	1 pc.	2621531
				for MOBI-SCREEN series	35 mm	Lower deck	Screen section, small	8 mm	1 pc.	2456089
				for MOBI-SCREEN series	35 mm	Upper/ middle deck	Screen section, large	8 mm	2 pc.	2354093

WIRE MESH										
Series code	Serial code	Series range	Part	Version	Clear mesh size	Deck	Position	Wire diameter	Requirement	Part no.
MSC 702i EVO	K103	1 - 9999	QM-GRADE 38 rectangular mesh	for MOBI-SCREEN series	38 mm	Upper/ middle deck	Screen section, small	8 mm	2 pc.	M10002485
				for MOBI-SCREEN series	38 mm	Upper/ middle deck	Screen section, large	8 mm	2 pc.	2639254
				for MOBI-SCREEN series	38 mm	Lower deck	Screen section, small	8 mm	1 pc.	2447233
				for MOBI-SCREEN series	38 mm	Lower deck	Screen section, large	8 mm	1 pc.	2453928
			QM-GRADE 40 rectangular mesh	for MOBI-SCREEN series	40 mm	Lower deck	Screen section, large	8 mm	1 pc.	2453931
				for MOBI-SCREEN series	40 mm	Lower deck	Screen section, small	8 mm	1 pc.	2447234
				for MOBI-SCREEN series	40 mm	Upper/ middle deck	Screen section, large	8 mm	2 pc.	2447134
				For use with MOBI-SCREEN series and secondary screening units	40 mm	Upper/ middle deck	Screen section, small	8 mm	2 pc.	M10005149
			QM-GRADE 45 rectangular mesh	for MOBI-SCREEN series	45 mm	Upper/ middle deck	Screen section, large	8 mm	2 pc.	2354091
				For use with MOBI-SCREEN series and secondary screening units	45 mm	Upper/ middle deck	Screen section, small	8 mm	2 pc.	M20001595

WIRE MESH										
Series code	Serial code	Series range	Part	Version	Clear mesh size	Deck	Position	Wire diameter	Requirement	Part no.
MSC 702i EVO	K103	1 - 9999	QM-GRADE 50 rectangular mesh	for MOBI-SCREEN series	50 mm	Lower deck	Screen section, large	10 mm	1 pc.	2453933
				For use with MOBI-SCREEN series and secondary screening units	50 mm	Upper/ middle deck	Screen section, small	10 mm	2 pc.	M20001298
				for MOBI-SCREEN series	50 mm	Lower deck	Screen section, small	10 mm	1 pc.	2447236
				for MOBI-SCREEN series	50 mm	Upper/ middle deck	Screen section, large	10 mm	2 pc.	2447141
			QM-GRADE 55 rectangular mesh	For use with MOBI-SCREEN series and secondary screening units	55 mm	Upper/ middle deck	Screen section, small	10 mm	2 pc.	M20001553
				for MOBI-SCREEN series	55 mm	Upper/ middle deck	Screen section, large	10 mm	2 pc.	2447143
			QM-GRADE 60 rectangular mesh	for MOBI-SCREEN series	60 mm	Upper/ middle deck	Screen section, large	10 mm	2 pc.	2447147
				For use with MOBI-SCREEN series and secondary screening units	60 mm	Upper/ middle deck	Screen section, small	10 mm	2 pc.	M20001555
			QM-GRADE 65 rectangular mesh	For use with MOBI-SCREEN series and secondary screening units	65 mm	Upper/ middle deck	Screen section, small	10 mm	2 pc.	M10010425

WIRE MESH										
Series code	Serial code	Series range	Part	Version	Clear mesh size	Deck	Position	Wire diameter	Requirement	Part no.
MSC 702i EVO	K103	1 - 9999	QM-GRADE 65 rectangular mesh	for MOBI-SCREEN series	65 mm	Upper/ middle deck	Screen section, large	10 mm	2 pc.	2447148
			QM-GRADE 7 rectangular mesh	for MOBI-SCREEN series	7 mm	Lower deck	Screen section, large	3 mm	1 pc.	2453886
				for MOBI-SCREEN series	7 mm	Upper/ middle deck	Screen section, large	3 mm	2 pc.	2447170
				for MOBI-SCREEN series	7 mm	Upper/ middle deck	Screen section, small	3 mm	2 pc.	2448953
				for MOBI-SCREEN series	7 mm	Lower deck	Screen section, small	3 mm	1 pc.	2447173
			QM-GRADE 70 rectangular mesh	For use with MOBI-SCREEN series and secondary screening units	70 mm	Upper/ middle deck	Screen section, small	10 mm	2 pc.	M20001752
				for MOBI-SCREEN series	70 mm	Upper/ middle deck	Screen section, large	10 mm	2 pc.	2447150
			QM-GRADE 75 rectangular mesh	for MOBI-SCREEN series	75 mm	Upper/ middle deck	Screen section, large	10 mm	2 pc.	2354086
				for MOBI-SCREEN series	75 mm	Upper/ middle deck	Screen section, small	10 mm	2 pc.	2448949
			QM-GRADE 8 rectangular mesh	For use with MOBI-SCREEN series and secondary screening units	8 mm	Upper/ middle deck	Screen section, small	3 mm	2 pc.	2348799

WIRE MESH										
Series code	Serial code	Series range	Part	Version	Clear mesh size	Deck	Position	Wire diameter	Requirement	Part no.
MSC 702i EVO	K103	1 - 9999	QM-GRADE 8 rectangular mesh	for MOBI-SCREEN series	8 mm	Upper/ middle deck	Screen section, large	3 mm	2 pc.	2447171
				for MOBI-SCREEN series	8 mm	Lower deck	Screen section, large	3 mm	1 pc.	2453889
				for MOBI-SCREEN series	8 mm	Lower deck	Screen section, small	3 mm	1 pc.	2447186
			QM-GRADE 9 rectangular mesh	for MOBI-SCREEN series	9 mm	Lower deck	Screen section, large	3 mm	1 pc.	2453891
				for MOBI-SCREEN series	9 mm	Lower deck	Screen section, small	3 mm	1 pc.	2447190
			QM-GRADE 90 rectangular mesh	for MOBI-SCREEN series	90 mm	Upper/ middle deck	Screen section, large	12 mm	2 pc.	2447153
				for MOBI-SCREEN series	90 mm	Upper/ middle deck	Screen section, small	12 mm	2 pc.	2448951
MSC 703 EVO	K084	1 - 9999	QM-GRADE 10 rectangular mesh	For use with MOBI-SCREEN series and secondary screening units	10 mm	Upper/ middle deck	Screen section, small	4 mm	2 pc.	2208580
				for MOBI-SCREEN series	10 mm	Upper/ middle deck	Screen section, large	4 mm	2 pc.	2428276
				for MOBI-SCREEN series	10 mm	Lower deck	Screen section, small	4 mm	1 pc.	2447196
				for MOBI-SCREEN series	10 mm	Lower deck	Screen section, large	4 mm	1 pc.	2453892

WIRE MESH										
Series code	Serial code	Series range	Part	Version	Clear mesh size	Deck	Position	Wire diameter	Requirement	Part no.
MSC 703 EVO	K084	1 - 9999	QM-GRADE 100 rectangular mesh	for MOBISCREEN series	100 mm	Upper/ middle deck	Screen section, small	12 mm	2 pc.	2448952
				for MOBISCREEN series	100 mm	Upper/ middle deck	Screen section, large	12 mm	2 pc.	2447154
			QM-GRADE 11 rectangular mesh	for MOBISCREEN series	11 mm	Upper/ middle deck	Screen section, large	4 mm	2 pc.	2447085
				for MOBISCREEN series	11 mm	Lower deck	Screen section, large	4 mm	1 pc.	2453894
				for MOBISCREEN series	11 mm	Upper/ middle deck	Screen section, small	4 mm	2 pc.	2199916
				for MOBISCREEN series	11 mm	Lower deck	Screen section, small	4 mm	1 pc.	2447202
			QM-GRADE 12 rectangular mesh	for MOBISCREEN series	12 mm	Lower deck	Screen section, large	4 mm	1 pc.	2453898
				for MOBISCREEN series	12 mm	Upper/ middle deck	Screen section, large	4 mm	2 pc.	2354096
				for secondary screening units & Mobiscreen series	12 mm	Upper/ middle deck	Screen section, small	4 mm	2 pc.	2448849
				for MOBISCREEN series	12 mm	Lower deck	Screen section, small	4 mm	1 pc.	2447208
			QM-GRADE 15 rectangular mesh	for MOBISCREEN series	15 mm	Lower deck	Screen section, large	5 mm	1 pc.	2453901
				for MOBISCREEN series	15 mm	Lower deck	Screen section, small	5 mm	1 pc.	2447216

WIRE MESH										
Series code	Serial code	Series range	Part	Version	Clear mesh size	Deck	Position	Wire diameter	Requirement	Part no.
MSC 703 EVO	K084	1 - 9999	QM-GRADE 15 rectangular mesh	for MOBI-SCREEN series	15 mm	Upper/ middle deck	Screen section, large	5 mm	2 pc.	2447094
				for MOBI-SCREEN series	15 mm	Upper/ middle deck	Screen section, small	5 mm	2 pc.	2448851
			QM-GRADE 16 rectangular mesh	for MOBI-SCREEN series	16 mm	Upper/ middle deck	Screen section, large	5 mm	2 pc.	2447110
				for MOBI-SCREEN series	16 mm	Upper/ middle deck	Screen section, small	5 mm	2 pc.	2448852
			QM-GRADE 18 rectangular mesh	for MOBI-SCREEN series	18 mm	Upper/ middle deck	Screen section, small	5 mm	2 pc.	M10003800
				for MOBI-SCREEN series	18 mm	Upper/ middle deck	Screen section, large	5 mm	2 pc.	2447118
			QM-GRADE 20 rectangular mesh	for MOBI-SCREEN series	20 mm	Lower deck	Screen section, small	5 mm	1 pc.	2447222
				For use with MOBI-SCREEN series and secondary screening units	20 mm	Upper/ middle deck	Screen section, small	5 mm	2 pc.	M10003491
				for MOBI-SCREEN series	20 mm	Upper/ middle deck	Screen section, large	5 mm	2 pc.	2354095
				for MOBI-SCREEN series	20 mm	Lower deck	Screen section, large	5 mm	1 pc.	2453902
			QM-GRADE 22 rectangular mesh	for MOBI-SCREEN series	22 mm	Upper/ middle deck	Screen section, large	6.3 mm	2 pc.	2491562

WIRE MESH										
Series code	Serial code	Series range	Part	Version	Clear mesh size	Deck	Position	Wire diameter	Requirement	Part no.
MSC 703 EVO	K084	1 - 9999	QM-GRADE 25 rectangular mesh	for MOBI-SCREEN series	25 mm	Lower deck	Screen section, small	6 mm	1 pc.	2447229
				for MOBI-SCREEN series	25 mm	Lower deck	Screen section, large	6 mm	1 pc.	2453919
				For use with MOBI-SCREEN series and secondary screening units	25 mm	Upper/ middle deck	Screen section, small	6 mm	2 pc.	M20001551
				for MOBI-SCREEN series	25 mm	Upper/ middle deck	Screen section, large	6 mm	2 pc.	2428275
			QM-GRADE 28 rectangular mesh	For use with MOBI-SCREEN series and secondary screening units	28 mm	Upper/ middle deck	Screen section, small	6 mm	2 pc.	M20001713
				for MOBI-SCREEN series	28 mm	Upper/ middle deck	Screen section, large	6 mm	2 pc.	2593549
			QM-GRADE 30 rectangular mesh	for MOBI-SCREEN series	30 mm	Upper/ middle deck	Screen section, large	8 mm	2 pc.	2447130
				For use with MOBI-SCREEN series and secondary screening units	30 mm	Upper/ middle deck	Screen section, small	8 mm	2 pc.	2234476
				for MOBI-SCREEN series	30 mm	Lower deck	Screen section, large	8 mm	1 pc.	2453927
				for MOBI-SCREEN series	30 mm	Lower deck	Screen section, small	8 mm	1 pc.	2447231

WIRE MESH										
Series code	Serial code	Series range	Part	Version	Clear mesh size	Deck	Posi-tion	Wire dia-meter	Re-quire-ment	Part no.
MSC 703 EVO	K084	1 - 9999	QM-GRADE 35 rect-angular mesh	for MOBI-SCREEN series	35 mm	Lower deck	Screen section, large	8 mm	1 pc.	2621531
				for MOBI-SCREEN series	35 mm	Lower deck	Screen section, small	8 mm	1 pc.	2456089
				for MOBI-SCREEN series	35 mm	Upper/ middle deck	Screen section, large	8 mm	2 pc.	2354093
			QM-GRADE 38 rect-angular mesh	for MOBI-SCREEN series	38 mm	Upper/ middle deck	Screen section, large	8 mm	2 pc.	2639254
				for MOBI-SCREEN series	38 mm	Upper/ middle deck	Screen section, small	8 mm	2 pc.	M10002485
				for MOBI-SCREEN series	38 mm	Lower deck	Screen section, small	8 mm	1 pc.	2447233
				for MOBI-SCREEN series	38 mm	Lower deck	Screen section, large	8 mm	1 pc.	2453928
			QM-GRADE 40 rect-angular mesh	for MOBI-SCREEN series	40 mm	Upper/ middle deck	Screen section, large	8 mm	2 pc.	2447134
				for MOBI-SCREEN series	40 mm	Lower deck	Screen section, small	8 mm	1 pc.	2447234
				for MOBI-SCREEN series	40 mm	Lower deck	Screen section, large	8 mm	1 pc.	2453931
				For use with MOBI-SCREEN series and secondary screening units	40 mm	Upper/ middle deck	Screen section, small	8 mm	2 pc.	M10005149

WIRE MESH										
Series code	Serial code	Series range	Part	Version	Clear mesh size	Deck	Position	Wire diameter	Requirement	Part no.
MSC 703 EVO	K084	1 - 9999	QM-GRADE 45 rectangular mesh	For use with MOBI-SCREEN series and secondary screening units	45 mm	Upper/ middle deck	Screen section, small	8 mm	2 pc.	M20001595
				for MOBI-SCREEN series	45 mm	Upper/ middle deck	Screen section, large	8 mm	2 pc.	2354091
			QM-GRADE 50 rectangular mesh	for MOBI-SCREEN series	50 mm	Upper/ middle deck	Screen section, large	10 mm	2 pc.	2447141
				For use with MOBI-SCREEN series and secondary screening units	50 mm	Upper/ middle deck	Screen section, small	10 mm	2 pc.	M20001298
				for MOBI-SCREEN series	50 mm	Lower deck	Screen section, large	10 mm	1 pc.	2453933
				for MOBI-SCREEN series	50 mm	Lower deck	Screen section, small	10 mm	1 pc.	2447236
			QM-GRADE 55 rectangular mesh	for MOBI-SCREEN series	55 mm	Upper/ middle deck	Screen section, large	10 mm	2 pc.	2447143
				For use with MOBI-SCREEN series and secondary screening units	55 mm	Upper/ middle deck	Screen section, small	10 mm	2 pc.	M20001553

WIRE MESH										
Series code	Serial code	Series range	Part	Version	Clear mesh size	Deck	Position	Wire diameter	Requirement	Part no.
MSC 703 EVO	K084	1 - 9999	QM-GRADE 60 rectangular mesh	for MOBI-SCREEN series	60 mm	Upper/ middle deck	Screen section, large	10 mm	2 pc.	2447147
				For use with MOBI-SCREEN series and secondary screening units	60 mm	Upper/ middle deck	Screen section, small	10 mm	2 pc.	M20001555
			QM-GRADE 65 rectangular mesh	for MOBI-SCREEN series	65 mm	Upper/ middle deck	Screen section, large	10 mm	2 pc.	2447148
				For use with MOBI-SCREEN series and secondary screening units	65 mm	Upper/ middle deck	Screen section, small	10 mm	2 pc.	M10010425
			QM-GRADE 7 rectangular mesh	for MOBI-SCREEN series	7 mm	Lower deck	Screen section, small	3 mm	1 pc.	2447173
				for MOBI-SCREEN series	7 mm	Upper/ middle deck	Screen section, large	3 mm	2 pc.	2447170
				for MOBI-SCREEN series	7 mm	Lower deck	Screen section, large	3 mm	1 pc.	2453886
				for MOBI-SCREEN series	7 mm	Upper/ middle deck	Screen section, small	3 mm	2 pc.	2448953
			QM-GRADE 70 rectangular mesh	for MOBI-SCREEN series	70 mm	Upper/ middle deck	Screen section, large	10 mm	2 pc.	2447150
				For use with MOBI-SCREEN series and secondary screening units	70 mm	Upper/ middle deck	Screen section, small	10 mm	2 pc.	M20001752

WIRE MESH										
Series code	Serial code	Series range	Part	Version	Clear mesh size	Deck	Position	Wire diameter	Requirement	Part no.
MSC 703 EVO	K084	1 - 9999	QM-GRADE 75 rectangular mesh	for MOBI-SCREEN series	75 mm	Upper/ middle deck	Screen section, small	10 mm	2 pc.	2448949
				for MOBI-SCREEN series	75 mm	Upper/ middle deck	Screen section, large	10 mm	2 pc.	2354086
			QM-GRADE 8 rectangular mesh	for MOBI-SCREEN series	8 mm	Lower deck	Screen section, small	3 mm	1 pc.	2447186
				For use with MOBI-SCREEN series and secondary screening units	8 mm	Upper/ middle deck	Screen section, small	3 mm	2 pc.	2348799
				for MOBI-SCREEN series	8 mm	Upper/ middle deck	Screen section, large	3 mm	2 pc.	2447171
				for MOBI-SCREEN series	8 mm	Lower deck	Screen section, large	3 mm	1 pc.	2453889
			QM-GRADE 9 rectangular mesh	for MOBI-SCREEN series	9 mm	Lower deck	Screen section, large	3 mm	1 pc.	2453891
				for MOBI-SCREEN series	9 mm	Lower deck	Screen section, small	3 mm	1 pc.	2447190
			QM-GRADE 90 rectangular mesh	for MOBI-SCREEN series	90 mm	Upper/ middle deck	Screen section, small	12 mm	2 pc.	2448951
				for MOBI-SCREEN series	90 mm	Upper/ middle deck	Screen section, large	12 mm	2 pc.	2447153
MSC 703i EVO	K104	1 - 9999	QM-GRADE 10 rectangular mesh	for MOBI-SCREEN series	10 mm	Lower deck	Screen section, small	4 mm	1 pc.	2447196
				for MOBI-SCREEN series	10 mm	Upper/ middle deck	Screen section, large	4 mm	2 pc.	2428276

WIRE MESH										
Series code	Serial code	Series range	Part	Version	Clear mesh size	Deck	Position	Wire diameter	Requirement	Part no.
MSC 703i EVO	K104	1 - 9999	QM-GRADE 10 rectangular mesh	for MOBI-SCREEN series	10 mm	Lower deck	Screen section, large	4 mm	1 pc.	2453892
				For use with MOBI-SCREEN series and secondary screening units	10 mm	Upper/ middle deck	Screen section, small	4 mm	2 pc.	2208580
			QM-GRADE 100 rectangular mesh	for MOBI-SCREEN series	100 mm	Upper/ middle deck	Screen section, large	12 mm	2 pc.	2447154
				for MOBI-SCREEN series	100 mm	Upper/ middle deck	Screen section, small	12 mm	2 pc.	2448952
			QM-GRADE 11 rectangular mesh	for MOBI-SCREEN series	11 mm	Upper/ middle deck	Screen section, large	4 mm	2 pc.	2447085
				for MOBI-SCREEN series	11 mm	Lower deck	Screen section, large	4 mm	1 pc.	2453894
				for MOBI-SCREEN series	11 mm	Lower deck	Screen section, small	4 mm	1 pc.	2447202
				for MOBI-SCREEN series	11 mm	Upper/ middle deck	Screen section, small	4 mm	2 pc.	2199916
			QM-GRADE 12 rectangular mesh	for MOBI-SCREEN series	12 mm	Upper/ middle deck	Screen section, large	4 mm	2 pc.	2354096
				for secondary screening units & Mobiscreen series	12 mm	Upper/ middle deck	Screen section, small	4 mm	2 pc.	2448849
				for MOBI-SCREEN series	12 mm	Lower deck	Screen section, large	4 mm	1 pc.	2453898

WIRE MESH

Series code	Serial code	Series range	Part	Version	Clear mesh size	Deck	Position	Wire diameter	Requirement	Part no.
MSC 703i EVO	K104	1 - 9999	QM-GRADE 12 rectangular mesh	for MOBI-SCREEN series	12 mm	Lower deck	Screen section, small	4 mm	1 pc.	2447208
			QM-GRADE 15 rectangular mesh	for MOBI-SCREEN series	15 mm	Lower deck	Screen section, small	5 mm	1 pc.	2447216
				for MOBI-SCREEN series	15 mm	Upper/ middle deck	Screen section, small	5 mm	2 pc.	2448851
				for MOBI-SCREEN series	15 mm	Upper/ middle deck	Screen section, large	5 mm	2 pc.	2447094
				for MOBI-SCREEN series	15 mm	Lower deck	Screen section, large	5 mm	1 pc.	2453901
			QM-GRADE 16 rectangular mesh	for MOBI-SCREEN series	16 mm	Upper/ middle deck	Screen section, small	5 mm	2 pc.	2448852
				for MOBI-SCREEN series	16 mm	Upper/ middle deck	Screen section, large	5 mm	2 pc.	2447110
			QM-GRADE 18 rectangular mesh	for MOBI-SCREEN series	18 mm	Upper/ middle deck	Screen section, small	5 mm	2 pc.	M10003800
				for MOBI-SCREEN series	18 mm	Upper/ middle deck	Screen section, large	5 mm	2 pc.	2447118
			QM-GRADE 20 rectangular mesh	for MOBI-SCREEN series	20 mm	Lower deck	Screen section, large	5 mm	1 pc.	2453902
				For use with MOBI-SCREEN series and secondary screening units	20 mm	Upper/ middle deck	Screen section, small	5 mm	2 pc.	M10003491

WIRE MESH										
Series code	Serial code	Series range	Part	Version	Clear mesh size	Deck	Position	Wire diameter	Requirement	Part no.
MSC 703i EVO	K104	1 - 9999	QM-GRADE 20 rectangular mesh	for MOBI-SCREEN series	20 mm	Upper/ middle deck	Screen section, large	5 mm	2 pc.	2354095
				for MOBI-SCREEN series	20 mm	Lower deck	Screen section, small	5 mm	1 pc.	2447222
			QM-GRADE 22 rectangular mesh	for MOBI-SCREEN series	22 mm	Upper/ middle deck	Screen section, large	6.3 mm	2 pc.	2491562
			QM-GRADE 25 rectangular mesh	for MOBI-SCREEN series	25 mm	Lower deck	Screen section, large	6 mm	1 pc.	2453919
				for MOBI-SCREEN series	25 mm	Lower deck	Screen section, small	6 mm	1 pc.	2447229
				for MOBI-SCREEN series	25 mm	Upper/ middle deck	Screen section, large	6 mm	2 pc.	2428275
				For use with MOBI-SCREEN series and secondary screening units	25 mm	Upper/ middle deck	Screen section, small	6 mm	2 pc.	M20001551
			QM-GRADE 28 rectangular mesh	For use with MOBI-SCREEN series and secondary screening units	28 mm	Upper/ middle deck	Screen section, small	6 mm	2 pc.	M20001713
				for MOBI-SCREEN series	28 mm	Upper/ middle deck	Screen section, large	6 mm	2 pc.	2593549

WIRE MESH										
Series code	Serial code	Series range	Part	Version	Clear mesh size	Deck	Position	Wire diameter	Requirement	Part no.
MSC 703i EVO	K104	1 - 9999	QM-GRADE 30 rectangular mesh	for MOBI-SCREEN series	30 mm	Lower deck	Screen section, large	8 mm	1 pc.	2453927
				for MOBI-SCREEN series	30 mm	Lower deck	Screen section, small	8 mm	1 pc.	2447231
				for MOBI-SCREEN series	30 mm	Upper/ middle deck	Screen section, large	8 mm	2 pc.	2447130
				For use with MOBI-SCREEN series and secondary screening units	30 mm	Upper/ middle deck	Screen section, small	8 mm	2 pc.	2234476
			QM-GRADE 35 rectangular mesh	for MOBI-SCREEN series	35 mm	Upper/ middle deck	Screen section, large	8 mm	2 pc.	2354093
				for MOBI-SCREEN series	35 mm	Lower deck	Screen section, large	8 mm	1 pc.	2621531
				for MOBI-SCREEN series	35 mm	Lower deck	Screen section, small	8 mm	1 pc.	2456089
			QM-GRADE 38 rectangular mesh	for MOBI-SCREEN series	38 mm	Lower deck	Screen section, small	8 mm	1 pc.	2447233
				for MOBI-SCREEN series	38 mm	Upper/ middle deck	Screen section, small	8 mm	2 pc.	M10002485
				for MOBI-SCREEN series	38 mm	Lower deck	Screen section, large	8 mm	1 pc.	2453928
				for MOBI-SCREEN series	38 mm	Upper/ middle deck	Screen section, large	8 mm	2 pc.	2639254

WIRE MESH										
Series code	Serial code	Series range	Part	Version	Clear mesh size	Deck	Position	Wire diameter	Requirement	Part no.
MSC 703i EVO	K104	1 - 9999	QM-GRADE 40 rectangular mesh	For use with MOBI-SCREEN series and secondary screening units	40 mm	Upper/ middle deck	Screen section, small	8 mm	2 pc.	M10005149
				for MOBI-SCREEN series	40 mm	Lower deck	Screen section, small	8 mm	1 pc.	2447234
				for MOBI-SCREEN series	40 mm	Lower deck	Screen section, large	8 mm	1 pc.	2453931
				for MOBI-SCREEN series	40 mm	Upper/ middle deck	Screen section, large	8 mm	2 pc.	2447134
			QM-GRADE 45 rectangular mesh	for MOBI-SCREEN series	45 mm	Upper/ middle deck	Screen section, large	8 mm	2 pc.	2354091
				For use with MOBI-SCREEN series and secondary screening units	45 mm	Upper/ middle deck	Screen section, small	8 mm	2 pc.	M20001595
			QM-GRADE 50 rectangular mesh	for MOBI-SCREEN series	50 mm	Lower deck	Screen section, large	10 mm	1 pc.	2453933
				For use with MOBI-SCREEN series and secondary screening units	50 mm	Upper/ middle deck	Screen section, small	10 mm	2 pc.	M20001298
				for MOBI-SCREEN series	50 mm	Lower deck	Screen section, small	10 mm	1 pc.	2447236
				for MOBI-SCREEN series	50 mm	Upper/ middle deck	Screen section, large	10 mm	2 pc.	2447141

WIRE MESH

Series code	Serial code	Series range	Part	Version	Clear mesh size	Deck	Position	Wire diameter	Requirement	Part no.
MSC 703i EVO	K104	1 - 9999	QM-GRADE 55 rectangular mesh	for MOBI-SCREEN series	55 mm	Upper/ middle deck	Screen section, large	10 mm	2 pc.	2447143
				For use with MOBI-SCREEN series and secondary screening units	55 mm	Upper/ middle deck	Screen section, small	10 mm	2 pc.	M20001553
			QM-GRADE 60 rectangular mesh	for MOBI-SCREEN series	60 mm	Upper/ middle deck	Screen section, large	10 mm	2 pc.	2447147
				For use with MOBI-SCREEN series and secondary screening units	60 mm	Upper/ middle deck	Screen section, small	10 mm	2 pc.	M20001555
			QM-GRADE 65 rectangular mesh	For use with MOBI-SCREEN series and secondary screening units	65 mm	Upper/ middle deck	Screen section, small	10 mm	2 pc.	M10010425
				for MOBI-SCREEN series	65 mm	Upper/ middle deck	Screen section, large	10 mm	2 pc.	2447148
			QM-GRADE 7 rectangular mesh	for MOBI-SCREEN series	7 mm	Upper/ middle deck	Screen section, small	3 mm	2 pc.	2448953
				for MOBI-SCREEN series	7 mm	Upper/ middle deck	Screen section, large	3 mm	2 pc.	2447170
				for MOBI-SCREEN series	7 mm	Lower deck	Screen section, small	3 mm	1 pc.	2447173
				for MOBI-SCREEN series	7 mm	Lower deck	Screen section, large	3 mm	1 pc.	2453886

WIRE MESH										
Series code	Serial code	Series range	Part	Version	Clear mesh size	Deck	Position	Wire diameter	Requirement	Part no.
MSC 703i EVO	K104	1 - 9999	QM-GRADE 70 rectangular mesh	For use with MOBI-SCREEN series and secondary screening units	70 mm	Upper/ middle deck	Screen section, small	10 mm	2 pc.	M20001752
				for MOBI-SCREEN series	70 mm	Upper/ middle deck	Screen section, large	10 mm	2 pc.	2447150
			QM-GRADE 75 rectangular mesh	for MOBI-SCREEN series	75 mm	Upper/ middle deck	Screen section, large	10 mm	2 pc.	2354086
				for MOBI-SCREEN series	75 mm	Upper/ middle deck	Screen section, small	10 mm	2 pc.	2448949
			QM-GRADE 8 rectangular mesh	for MOBI-SCREEN series	8 mm	Lower deck	Screen section, large	3 mm	1 pc.	2453889
				For use with MOBI-SCREEN series and secondary screening units	8 mm	Upper/ middle deck	Screen section, small	3 mm	2 pc.	2348799
				for MOBI-SCREEN series	8 mm	Lower deck	Screen section, small	3 mm	1 pc.	2447186
				for MOBI-SCREEN series	8 mm	Upper/ middle deck	Screen section, large	3 mm	2 pc.	2447171
			QM-GRADE 9 rectangular mesh	for MOBI-SCREEN series	9 mm	Lower deck	Screen section, large	3 mm	1 pc.	2453891
				for MOBI-SCREEN series	9 mm	Lower deck	Screen section, small	3 mm	1 pc.	2447190

WIRE MESH

Series code	Serial code	Series range	Part	Version	Clear mesh size	Deck	Position	Wire diameter	Requirement	Part no.
MSC 703i EVO	K104	1 - 9999	QM-GRADE 90 rectangular mesh	for MOBI-SCREEN series	90 mm	Upper/ middle deck	Screen section, large	12 mm	2 pc.	2447153
				for MOBI-SCREEN series	90 mm	Upper/ middle deck	Screen section, small	12 mm	2 pc.	2448951
MSC 952 EVO	K085	1 - 9999	QM-GRADE 10 rectangular mesh	for MOBI-SCREEN series	10 mm	Lower deck	Screen section, large	4 mm	3 pc.	2447196
				for MOBI-SCREEN series	10 mm	Upper/ middle deck	Screen section, large	4 mm	5 pc.	2428276
			QM-GRADE 100 rectangular mesh	for MOBI-SCREEN series	100 mm	Upper/ middle deck	Screen section, large	12 mm	5 pc.	2447154
			QM-GRADE 11 rectangular mesh	for MOBI-SCREEN series	11 mm	Upper/ middle deck	Screen section, large	4 mm	5 pc.	2447085
				for MOBI-SCREEN series	11 mm	Lower deck	Screen section, large	4 mm	3 pc.	2447202
			QM-GRADE 12 rectangular mesh	for MOBI-SCREEN series	12 mm	Lower deck	Screen section, large	4 mm	3 pc.	2447208
				for MOBI-SCREEN series	12 mm	Upper/ middle deck	Screen section, large	4 mm	5 pc.	2354096
			QM-GRADE 15 rectangular mesh	for MOBI-SCREEN series	15 mm	Upper/ middle deck	Screen section, large	5 mm	5 pc.	2447094
				for MOBI-SCREEN series	15 mm	Lower deck	Screen section, large	5 mm	3 pc.	2447216
			QM-GRADE 16 rectangular mesh	for MOBI-SCREEN series	16 mm	Upper/ middle deck	Screen section, large	5 mm	5 pc.	2447110

WIRE MESH										
Series code	Serial code	Series range	Part	Version	Clear mesh size	Deck	Position	Wire diameter	Requirement	Part no.
MSC 952 EVO	K085	1 - 9999	QM-GRADE 18 rectangular mesh	for MOBISCREEN series	18 mm	Upper/middle deck	Screen section, large	5 mm	5 pc.	2447118
			QM-GRADE 20 rectangular mesh	for MOBISCREEN series	20 mm	Upper/middle deck	Screen section, large	5 mm	5 pc.	2354095
				for MOBISCREEN series	20 mm	Lower deck	Screen section, large	5 mm	3 pc.	2447222
			QM-GRADE 22 rectangular mesh	for MOBISCREEN series	22 mm	Upper/middle deck	Screen section, large	6.3 mm	5 pc.	2491562
			QM-GRADE 25 rectangular mesh	for MOBISCREEN series	25 mm	Lower deck	Screen section, large	6 mm	3 pc.	2447229
				for MOBISCREEN series	25 mm	Upper/middle deck	Screen section, large	6.3 mm	5 pc.	2428275
			QM-GRADE 28 rectangular mesh	for MOBISCREEN series	28 mm	Upper/middle deck	Screen section, large	6.3 mm	5 pc.	2593549
			QM-GRADE 30 rectangular mesh	for MOBISCREEN series	30 mm	Upper/middle deck	Screen section, large	8 mm	5 pc.	2447130
				for MOBISCREEN series	30 mm	Lower deck	Screen section, large	8 mm	3 pc.	2447231
			QM-GRADE 32 rectangular mesh	for MOBISCREEN series	32 mm	Upper/middle deck	Screen section, large	8 mm	5 pc.	2593554

WIRE MESH										
Series code	Serial code	Series range	Part	Version	Clear mesh size	Deck	Position	Wire diameter	Requirement	Part no.
MSC 952 EVO	K085	1 - 9999	QM-GRADE 35 rectangular mesh	for MOBI-SCREEN series	35 mm	Lower deck	Screen section, large	8 mm	3 pc.	2456089
				for MOBI-SCREEN series	35 mm	Upper/ middle deck	Screen section, large	8 mm	5 pc.	2354093
			QM-GRADE 38 rectangular mesh	for MOBI-SCREEN series	38 mm	Upper/ middle deck	Screen section, large	8 mm	5 pc.	2639254
				for MOBI-SCREEN series	38 mm	Lower deck	Screen section, large	8 mm	3 pc.	2447233
			QM-GRADE 40 rectangular mesh	for MOBI-SCREEN series	40 mm	Upper/ middle deck	Screen section, large	8 mm	5 pc.	2447134
				for MOBI-SCREEN series	40 mm	Lower deck	Screen section, large	8 mm	3 pc.	2447234
			QM-GRADE 45 rectangular mesh	for MOBI-SCREEN series	45 mm	Upper/ middle deck	Screen section, large	8 mm	5 pc.	2354091
				for MOBI-SCREEN series	45 mm	Lower deck	Screen section, large	8 mm	3 pc.	2593570
			QM-GRADE 50 rectangular mesh	for MOBI-SCREEN series	50 mm	Lower deck	Screen section, large	10 mm	3 pc.	2447236
				for MOBI-SCREEN series	50 mm	Upper/ middle deck	Screen section, large	8 mm	5 pc.	2447141
			QM-GRADE 55 rectangular mesh	for MOBI-SCREEN series	55 mm	Upper/ middle deck	Screen section, large	10 mm	5 pc.	2447143
			QM-GRADE 60 rectangular mesh	for MOBI-SCREEN series	60 mm	Upper/ middle deck	Screen section, large	10 mm	5 pc.	2447147

WIRE MESH										
Series code	Serial code	Series range	Part	Version	Clear mesh size	Deck	Position	Wire diameter	Requirement	Part no.
MSC 952 EVO	K085	1 - 9999	QM-GRADE 65 rectangular mesh	for MOBI-SCREEN series	65 mm	Upper/ middle deck	Screen section, large	10 mm	5 pc.	2447148
			QM-GRADE 7 rectangular mesh	for MOBI-SCREEN series	7 mm	Upper/ middle deck	Screen section, large	3 mm	5 pc.	2447170
				for MOBI-SCREEN series	7 mm	Lower deck	Screen section, large	3 mm	3 pc.	2447173
			QM-GRADE 70 rectangular mesh	for MOBI-SCREEN series	70 mm	Upper/ middle deck	Screen section, large	10 mm	5 pc.	2447150
			QM-GRADE 75 rectangular mesh	for MOBI-SCREEN series	75 mm	Upper/ middle deck	Screen section, large	10 mm	5 pc.	2354086
			QM-GRADE 8 rectangular mesh	for MOBI-SCREEN series	8 mm	Upper/ middle deck	Screen section, large	3 mm	5 pc.	2447171
				for MOBI-SCREEN series	8 mm	Lower deck	Screen section, large	3 mm	3 pc.	2447186
			QM-GRADE 9 rectangular mesh	for MOBI-SCREEN series	9 mm	Lower deck	Screen section, large	3 mm	3 pc.	2447190
			QM-GRADE 90 rectangular mesh	for MOBI-SCREEN series	90 mm	Upper/ middle deck	Screen section, large	12 mm	5 pc.	2447153

WIRE MESH

Series code	Serial code	Series range	Part	Version	Clear mesh size	Deck	Position	Wire diameter	Requirement	Part no.
MSC 952i EVO	K105	1 - 9999	QM-GRADE 10 rectangular mesh	for MOBI-SCREEN series	10 mm	Upper/ middle deck	Screen section, large	4 mm	5 pc.	2428276
				for MOBI-SCREEN series	10 mm	Lower deck	Screen section, large	4 mm	3 pc.	2447196
			QM-GRADE 100 rectangular mesh	for MOBI-SCREEN series	100 mm	Upper/ middle deck	Screen section, large	12 mm	5 pc.	2447154
			QM-GRADE 11 rectangular mesh	for MOBI-SCREEN series	11 mm	Lower deck	Screen section, large	4 mm	3 pc.	2447202
				for MOBI-SCREEN series	11 mm	Upper/ middle deck	Screen section, large	4 mm	5 pc.	2447085
			QM-GRADE 12 rectangular mesh	for MOBI-SCREEN series	12 mm	Upper/ middle deck	Screen section, large	4 mm	5 pc.	2354096
				for MOBI-SCREEN series	12 mm	Lower deck	Screen section, large	4 mm	3 pc.	2447208
			QM-GRADE 15 rectangular mesh	for MOBI-SCREEN series	15 mm	Upper/ middle deck	Screen section, large	5 mm	5 pc.	2447094
				for MOBI-SCREEN series	15 mm	Lower deck	Screen section, large	5 mm	3 pc.	2447216
			QM-GRADE 16 rectangular mesh	for MOBI-SCREEN series	16 mm	Upper/ middle deck	Screen section, large	5 mm	5 pc.	2447110
			QM-GRADE 18 rectangular mesh	for MOBI-SCREEN series	18 mm	Upper/ middle deck	Screen section, large	5 mm	5 pc.	2447118

WIRE MESH										
Series code	Serial code	Series range	Part	Version	Clear mesh size	Deck	Position	Wire diameter	Requirement	Part no.
MSC 952i EVO	K105	1 - 9999	QM-GRADE 20 rectangular mesh	for MOBISCREEN series	20 mm	Lower deck	Screen section, large	5 mm	3 pc.	2447222
				for MOBISCREEN series	20 mm	Upper/middle deck	Screen section, large	5 mm	5 pc.	2354095
			QM-GRADE 22 rectangular mesh	for MOBISCREEN series	22 mm	Upper/middle deck	Screen section, large	6.3 mm	5 pc.	2491562
			QM-GRADE 25 rectangular mesh	for MOBISCREEN series	25 mm	Lower deck	Screen section, large	6 mm	3 pc.	2447229
				for MOBISCREEN series	25 mm	Upper/middle deck	Screen section, large	6.3 mm	5 pc.	2428275
			QM-GRADE 28 rectangular mesh	for MOBISCREEN series	28 mm	Upper/middle deck	Screen section, large	6.3 mm	5 pc.	2593549
			QM-GRADE 30 rectangular mesh	for MOBISCREEN series	30 mm	Lower deck	Screen section, large	8 mm	3 pc.	2447231
				for MOBISCREEN series	30 mm	Upper/middle deck	Screen section, large	8 mm	5 pc.	2447130
			QM-GRADE 32 rectangular mesh	for MOBISCREEN series	32 mm	Upper/middle deck	Screen section, large	8 mm	5 pc.	2593554
			QM-GRADE 35 rectangular mesh	for MOBISCREEN series	35 mm	Upper/middle deck	Screen section, large	8 mm	5 pc.	2354093
				for MOBISCREEN series	35 mm	Lower deck	Screen section, large	8 mm	3 pc.	2456089

WIRE MESH										
Series code	Serial code	Series range	Part	Version	Clear mesh size	Deck	Position	Wire diameter	Requirement	Part no.
MSC 952i EVO	K105	1 - 9999	QM-GRADE 38 rectangular mesh	for MOBI-SCREEN series	38 mm	Lower deck	Screen section, large	8 mm	3 pc.	2447233
				for MOBI-SCREEN series	38 mm	Upper/ middle deck	Screen section, large	8 mm	5 pc.	2639254
			QM-GRADE 40 rectangular mesh	for MOBI-SCREEN series	40 mm	Upper/ middle deck	Screen section, large	8 mm	5 pc.	2447134
				for MOBI-SCREEN series	40 mm	Lower deck	Screen section, large	8 mm	3 pc.	2447234
			QM-GRADE 45 rectangular mesh	for MOBI-SCREEN series	45 mm	Lower deck	Screen section, large	8 mm	3 pc.	2593570
				for MOBI-SCREEN series	45 mm	Upper/ middle deck	Screen section, large	8 mm	5 pc.	2354091
			QM-GRADE 50 rectangular mesh	for MOBI-SCREEN series	50 mm	Upper/ middle deck	Screen section, large	8 mm	5 pc.	2447141
				for MOBI-SCREEN series	50 mm	Lower deck	Screen section, large	10 mm	3 pc.	2447236
			QM-GRADE 55 rectangular mesh	for MOBI-SCREEN series	55 mm	Upper/ middle deck	Screen section, large	10 mm	5 pc.	2447143
			QM-GRADE 60 rectangular mesh	for MOBI-SCREEN series	60 mm	Upper/ middle deck	Screen section, large	10 mm	5 pc.	2447147
			QM-GRADE 65 rectangular mesh	for MOBI-SCREEN series	65 mm	Upper/ middle deck	Screen section, large	10 mm	5 pc.	2447148

WIRE MESH										
Series code	Serial code	Series range	Part	Version	Clear mesh size	Deck	Position	Wire diameter	Requirement	Part no.
MSC 952i EVO	K105	1 - 9999	QM-GRADE 7 rectangular mesh	for MOBI-SCREEN series	7 mm	Lower deck	Screen section, large	3 mm	3 pc.	2447173
				for MOBI-SCREEN series	7 mm	Upper/ middle deck	Screen section, large	3 mm	5 pc.	2447170
			QM-GRADE 70 rectangular mesh	for MOBI-SCREEN series	70 mm	Upper/ middle deck	Screen section, large	10 mm	5 pc.	2447150
			QM-GRADE 75 rectangular mesh	for MOBI-SCREEN series	75 mm	Upper/ middle deck	Screen section, large	10 mm	5 pc.	2354086
			QM-GRADE 8 rectangular mesh	for MOBI-SCREEN series	8 mm	Lower deck	Screen section, large	3 mm	3 pc.	2447186
				for MOBI-SCREEN series	8 mm	Upper/ middle deck	Screen section, large	3 mm	5 pc.	2447171
			QM-GRADE 9 rectangular mesh	for MOBI-SCREEN series	9 mm	Lower deck	Screen section, large	3 mm	3 pc.	2447190
			QM-GRADE 90 rectangular mesh	for MOBI-SCREEN series	90 mm	Upper/ middle deck	Screen section, large	12 mm	5 pc.	2447153
MSC 953 EVO	K086	1 - 9999	QM-GRADE 10 rectangular mesh	for MOBI-SCREEN series	10 mm	Lower deck	Screen section, large	4 mm	3 pc.	2447196
				for MOBI-SCREEN series	10 mm	Upper/ middle deck	Screen section, large	4 mm	5 pc.	2428276

WIRE MESH										
Series code	Serial code	Series range	Part	Version	Clear mesh size	Deck	Position	Wire diameter	Requirement	Part no.
MSC 953 EVO	K086	1 - 9999	QM-GRADE 100 rectangular mesh	for MOBI-SCREEN series	100 mm	Upper/ middle deck	Screen section, large	12 mm	5 pc.	2447154
			QM-GRADE 11 rectangular mesh	for MOBI-SCREEN series	11 mm	Lower deck	Screen section, large	4 mm	3 pc.	2447202
				for MOBI-SCREEN series	11 mm	Upper/ middle deck	Screen section, large	4 mm	5 pc.	2447085
			QM-GRADE 12 rectangular mesh	for MOBI-SCREEN series	12 mm	Lower deck	Screen section, large	4 mm	3 pc.	2447208
				for MOBI-SCREEN series	12 mm	Upper/ middle deck	Screen section, large	4 mm	5 pc.	2354096
			QM-GRADE 15 rectangular mesh	for MOBI-SCREEN series	15 mm	Lower deck	Screen section, large	5 mm	3 pc.	2447216
				for MOBI-SCREEN series	15 mm	Upper/ middle deck	Screen section, large	5 mm	5 pc.	2447094
			QM-GRADE 16 rectangular mesh	for MOBI-SCREEN series	16 mm	Upper/ middle deck	Screen section, large	5 mm	5 pc.	2447110
			QM-GRADE 18 rectangular mesh	for MOBI-SCREEN series	18 mm	Upper/ middle deck	Screen section, large	5 mm	5 pc.	2447118
			QM-GRADE 20 rectangular mesh	for MOBI-SCREEN series	20 mm	Upper/ middle deck	Screen section, large	5 mm	5 pc.	2354095
				for MOBI-SCREEN series	20 mm	Lower deck	Screen section, large	5 mm	3 pc.	2447222

WIRE MESH										
Series code	Serial code	Series range	Part	Version	Clear mesh size	Deck	Position	Wire diameter	Requirement	Part no.
MSC 953 EVO	K086	1 - 9999	QM-GRADE 22 rectangular mesh	for MOBI-SCREEN series	22 mm	Upper/ middle deck	Screen section, large	6.3 mm	5 pc.	2491562
			QM-GRADE 25 rectangular mesh	for MOBI-SCREEN series	25 mm	Upper/ middle deck	Screen section, large	6.3 mm	5 pc.	2428275
				for MOBI-SCREEN series	25 mm	Lower deck	Screen section, large	6 mm	3 pc.	2447229
			QM-GRADE 28 rectangular mesh	for MOBI-SCREEN series	28 mm	Upper/ middle deck	Screen section, large	6.3 mm	5 pc.	2593549
			QM-GRADE 30 rectangular mesh	for MOBI-SCREEN series	30 mm	Upper/ middle deck	Screen section, large	8 mm	5 pc.	2447130
				for MOBI-SCREEN series	30 mm	Lower deck	Screen section, large	8 mm	3 pc.	2447231
			QM-GRADE 32 rectangular mesh	for MOBI-SCREEN series	32 mm	Upper/ middle deck	Screen section, large	8 mm	5 pc.	2593554
			QM-GRADE 35 rectangular mesh	for MOBI-SCREEN series	35 mm	Lower deck	Screen section, large	8 mm	3 pc.	2456089
				for MOBI-SCREEN series	35 mm	Upper/ middle deck	Screen section, large	8 mm	5 pc.	2354093
			QM-GRADE 38 rectangular mesh	for MOBI-SCREEN series	38 mm	Lower deck	Screen section, large	8 mm	3 pc.	2447233
				for MOBI-SCREEN series	38 mm	Upper/ middle deck	Screen section, large	8 mm	5 pc.	2639254

WIRE MESH										
Series code	Serial code	Series range	Part	Version	Clear mesh size	Deck	Position	Wire diameter	Requirement	Part no.
MSC 953 EVO	K086	1 - 9999	QM-GRADE 40 rectangular mesh	for MOBISCREEN series	40 mm	Upper/ middle deck	Screen section, large	8 mm	5 pc.	2447134
				for MOBISCREEN series	40 mm	Lower deck	Screen section, large	8 mm	3 pc.	2447234
			QM-GRADE 45 rectangular mesh	for MOBISCREEN series	45 mm	Upper/ middle deck	Screen section, large	8 mm	5 pc.	2354091
				for MOBISCREEN series	45 mm	Lower deck	Screen section, large	8 mm	3 pc.	2593570
			QM-GRADE 50 rectangular mesh	for MOBISCREEN series	50 mm	Lower deck	Screen section, large	10 mm	3 pc.	2447236
				for MOBISCREEN series	50 mm	Upper/ middle deck	Screen section, large	8 mm	5 pc.	2447141
			QM-GRADE 55 rectangular mesh	for MOBISCREEN series	55 mm	Upper/ middle deck	Screen section, large	10 mm	5 pc.	2447143
			QM-GRADE 60 rectangular mesh	for MOBISCREEN series	60 mm	Upper/ middle deck	Screen section, large	10 mm	5 pc.	2447147
			QM-GRADE 65 rectangular mesh	for MOBISCREEN series	65 mm	Upper/ middle deck	Screen section, large	10 mm	5 pc.	2447148
			QM-GRADE 7 rectangular mesh	for MOBISCREEN series	7 mm	Upper/ middle deck	Screen section, large	3 mm	5 pc.	2447170
				for MOBISCREEN series	7 mm	Lower deck	Screen section, large	3 mm	3 pc.	2447173

WIRE MESH										
Series code	Serial code	Series range	Part	Version	Clear mesh size	Deck	Position	Wire diameter	Requirement	Part no.
MSC 953 EVO	K086	1 - 9999	QM-GRADE 70 rectangular mesh	for MOBISCREEN series	70 mm	Upper/ middle deck	Screen section, large	10 mm	5 pc.	2447150
			QM-GRADE 75 rectangular mesh	for MOBISCREEN series	75 mm	Upper/ middle deck	Screen section, large	10 mm	5 pc.	2354086
			QM-GRADE 8 rectangular mesh	for MOBISCREEN series	8 mm	Upper/ middle deck	Screen section, large	3 mm	5 pc.	2447171
				for MOBISCREEN series	8 mm	Lower deck	Screen section, large	3 mm	3 pc.	2447186
			QM-GRADE 9 rectangular mesh	for MOBISCREEN series	9 mm	Lower deck	Screen section, large	3 mm	3 pc.	2447190
			QM-GRADE 90 rectangular mesh	for MOBISCREEN series	90 mm	Upper/ middle deck	Screen section, large	12 mm	5 pc.	2447153
MSC 953i EVO	K106	1 - 9999	QM-GRADE 10 rectangular mesh	for MOBISCREEN series	10 mm	Upper/ middle deck	Screen section, large	4 mm	5 pc.	2428276
				for MOBISCREEN series	10 mm	Lower deck	Screen section, large	4 mm	3 pc.	2447196
			QM-GRADE 100 rectangular mesh	for MOBISCREEN series	100 mm	Upper/ middle deck	Screen section, large	12 mm	5 pc.	2447154

WIRE MESH										
Series code	Serial code	Series range	Part	Version	Clear mesh size	Deck	Position	Wire diameter	Requirement	Part no.
MSC 953i EVO	K106	1 - 9999	QM-GRADE 11 rectangular mesh	for MOBI-SCREEN series	11 mm	Lower deck	Screen section, large	4 mm	3 pc.	2447202
				for MOBI-SCREEN series	11 mm	Upper/ middle deck	Screen section, large	4 mm	5 pc.	2447085
			QM-GRADE 12 rectangular mesh	for MOBI-SCREEN series	12 mm	Upper/ middle deck	Screen section, large	4 mm	5 pc.	2354096
				for MOBI-SCREEN series	12 mm	Lower deck	Screen section, large	4 mm	3 pc.	2447208
			QM-GRADE 15 rectangular mesh	for MOBI-SCREEN series	15 mm	Upper/ middle deck	Screen section, large	5 mm	5 pc.	2447094
				for MOBI-SCREEN series	15 mm	Lower deck	Screen section, large	5 mm	3 pc.	2447216
			QM-GRADE 16 rectangular mesh	for MOBI-SCREEN series	16 mm	Upper/ middle deck	Screen section, large	5 mm	5 pc.	2447110
			QM-GRADE 18 rectangular mesh	for MOBI-SCREEN series	18 mm	Upper/ middle deck	Screen section, large	5 mm	5 pc.	2447118
			QM-GRADE 20 rectangular mesh	for MOBI-SCREEN series	20 mm	Upper/ middle deck	Screen section, large	5 mm	5 pc.	2354095
				for MOBI-SCREEN series	20 mm	Lower deck	Screen section, large	5 mm	3 pc.	2447222
			QM-GRADE 22 rectangular mesh	for MOBI-SCREEN series	22 mm	Upper/ middle deck	Screen section, large	6.3 mm	5 pc.	2491562

WIRE MESH										
Series code	Serial code	Series range	Part	Version	Clear mesh size	Deck	Position	Wire diameter	Requirement	Part no.
MSC 953i EVO	K106	1 - 9999	QM-GRADE 25 rectangular mesh	for MOBISCREEN series	25 mm	Upper/ middle deck	Screen section, large	6.3 mm	5 pc.	2428275
				for MOBISCREEN series	25 mm	Lower deck	Screen section, large	6 mm	3 pc.	2447229
			QM-GRADE 28 rectangular mesh	for MOBISCREEN series	28 mm	Upper/ middle deck	Screen section, large	6.3 mm	5 pc.	2593549
			QM-GRADE 30 rectangular mesh	for MOBISCREEN series	30 mm	Lower deck	Screen section, large	8 mm	3 pc.	2447231
				for MOBISCREEN series	30 mm	Upper/ middle deck	Screen section, large	8 mm	5 pc.	2447130
			QM-GRADE 32 rectangular mesh	for MOBISCREEN series	32 mm	Upper/ middle deck	Screen section, large	8 mm	5 pc.	2593554
			QM-GRADE 35 rectangular mesh	for MOBISCREEN series	35 mm	Lower deck	Screen section, large	8 mm	3 pc.	2456089
				for MOBISCREEN series	35 mm	Upper/ middle deck	Screen section, large	8 mm	5 pc.	2354093
			QM-GRADE 38 rectangular mesh	for MOBISCREEN series	38 mm	Upper/ middle deck	Screen section, large	8 mm	5 pc.	2639254
				for MOBISCREEN series	38 mm	Lower deck	Screen section, large	8 mm	3 pc.	2447233
			QM-GRADE 40 rectangular mesh	for MOBISCREEN series	40 mm	Lower deck	Screen section, large	8 mm	3 pc.	2447234
				for MOBISCREEN series	40 mm	Upper/ middle deck	Screen section, large	8 mm	5 pc.	2447134

WIRE MESH										
Series code	Serial code	Series range	Part	Version	Clear mesh size	Deck	Position	Wire diameter	Requirement	Part no.
MSC 953i EVO	K106	1 - 9999	QM-GRADE 45 rectangular mesh	for MOBI-SCREEN series	45 mm	Upper/ middle deck	Screen section, large	8 mm	5 pc.	2354091
				for MOBI-SCREEN series	45 mm	Lower deck	Screen section, large	8 mm	3 pc.	2593570
			QM-GRADE 50 rectangular mesh	for MOBI-SCREEN series	50 mm	Lower deck	Screen section, large	10 mm	3 pc.	2447236
				for MOBI-SCREEN series	50 mm	Upper/ middle deck	Screen section, large	8 mm	5 pc.	2447141
			QM-GRADE 55 rectangular mesh	for MOBI-SCREEN series	55 mm	Upper/ middle deck	Screen section, large	10 mm	5 pc.	2447143
			QM-GRADE 60 rectangular mesh	for MOBI-SCREEN series	60 mm	Upper/ middle deck	Screen section, large	10 mm	5 pc.	2447147
			QM-GRADE 65 rectangular mesh	for MOBI-SCREEN series	65 mm	Upper/ middle deck	Screen section, large	10 mm	5 pc.	2447148
			QM-GRADE 7 rectangular mesh	for MOBI-SCREEN series	7 mm	Upper/ middle deck	Screen section, large	3 mm	5 pc.	2447170
				for MOBI-SCREEN series	7 mm	Lower deck	Screen section, large	3 mm	3 pc.	2447173
			QM-GRADE 70 rectangular mesh	for MOBI-SCREEN series	70 mm	Upper/ middle deck	Screen section, large	10 mm	5 pc.	2447150

WIRE MESH										
Series code	Serial code	Series range	Part	Version	Clear mesh size	Deck	Position	Wire diameter	Requirement	Part no.
MSC 953i EVO	K106	1 - 9999	QM-GRADE 75 rectangular mesh	for MOBI-SCREEN series	75 mm	Upper/ middle deck	Screen section, large	10 mm	5 pc.	2354086
			QM-GRADE 8 rectangular mesh	for MOBI-SCREEN series	8 mm	Lower deck	Screen section, large	3 mm	3 pc.	2447186
				for MOBI-SCREEN series	8 mm	Upper/ middle deck	Screen section, large	3 mm	5 pc.	2447171
			QM-GRADE 9 rectangular mesh	for MOBI-SCREEN series	9 mm	Lower deck	Screen section, large	3 mm	3 pc.	2447190
			QM-GRADE 90 rectangular mesh	for MOBI-SCREEN series	90 mm	Upper/ middle deck	Screen section, large	12 mm	5 pc.	2447153
MC 110 EVO	K116	1 - 9999	Dummy rubber	for pre-screening units		Lower deck			1 pc.	WX3225247
			QM-GRADE 10 rectangular mesh	for pre-screening units	10 mm	Lower deck		4 mm	1 pc.	2298547
			QM-GRADE 12 rectangular mesh	for pre-screening units	12 mm	Lower deck		4 mm	1 pc.	2298549
			QM-GRADE 15 rectangular mesh	for pre-screening units	15 mm	Lower deck		4 mm	1 pc.	2298550

WIRE MESH

Series code	Serial code	Series range	Part	Version	Clear mesh size	Deck	Position	Wire diameter	Requirement	Part no.
MC 110 EVO	K116	1 - 9999	QM-GRADE 18 rectangular mesh	for pre-screening units	18 mm	Lower deck		4 mm	1 pc.	2298551
			QM-GRADE 20 rectangular mesh	for pre-screening units	20 mm	Lower deck		5 mm	1 pc.	2298552
			QM-GRADE 22 rectangular mesh	for pre-screening units	22 mm	Lower deck		6 mm	1 pc.	2617143
			QM-GRADE 25 rectangular mesh	for pre-screening units	25 mm	Lower deck		6 mm	1 pc.	2298554
			QM-GRADE 30 rectangular mesh	for pre-screening units	30 mm	Lower deck		8 mm	1 pc.	2298555
			QM-GRADE 35 rectangular mesh	for pre-screening units	35 mm	Lower deck		8 mm	1 pc.	2298556
			QM-GRADE 40 rectangular mesh	for pre-screening units	40 mm	Lower deck		8 mm	1 pc.	2298557
			QM-GRADE 45 rectangular mesh	for pre-screening units	45 mm	Lower deck		8 mm	1 pc.	2298558

WIRE MESH										
Series code	Serial code	Series range	Part	Version	Clear mesh size	Deck	Position	Wire diameter	Requirement	Part no.
MC 110 EVO	K116	1 - 9999	QM-GRADE 50 rectangular mesh	for pre-screening units	50 mm	Lower deck		10 mm	1 pc.	2298559
			QM-GRADE 55 rectangular mesh	for pre-screening units	55 mm	Lower deck		10 mm	1 pc.	2298560
			QM-GRADE 60 rectangular mesh	for pre-screening units	60 mm	Lower deck		10 mm	1 pc.	2607436
MCO 90 EVO	K120	1 - 9999	QM-GRADE 10 rectangular mesh	for secondary screening units	10 mm	Upper deck - NSE double-deck version	Screen section, small	4 mm	1 pc.	2234837
				for secondary screening units	10 mm	Upper deck - NSE single-deck version; Upper deck - NSE double-deck version	Screen section, large	4 mm	4 pc.	2234836
			QM-GRADE 11 rectangular mesh	for pre-screening units	11 mm	Upper deck - NSE single-deck version	Screen section, large	4 mm	4 pc.	2220302

WIRE MESH										
Series code	Serial code	Series range	Part	Version	Clear mesh size	Deck	Position	Wire diameter	Requirement	Part no.
MCO 90 EVO	K120	1 - 9999	QM-GRADE 12 rectangular mesh	for secondary screening units	12 mm	Upper deck - NSE double-deck version	Screen section, small	4 mm	1 pc.	M20001523
				for secondary screening units	12 mm	Upper deck - NSE single-deck version; Upper deck - NSE double-deck version	Screen section, large	4 mm	4 pc.	M20001524
			QM-GRADE 13 rectangular mesh	for pre-screening units	13 mm	Upper deck - NSE single-deck version	Screen section, large	4 mm	4 pc.	2570206
			QM-GRADE 15 rectangular mesh	for secondary screening units	15 mm	Upper deck - NSE double-deck version	Screen section, small	4 mm	1 pc.	M20001534
				for secondary screening units	15 mm	Upper deck - NSE single-deck version; Upper deck - NSE double-deck version	Screen section, large	4 mm	4 pc.	M20001533

WIRE MESH										
Series code	Serial code	Series range	Part	Version	Clear mesh size	Deck	Position	Wire diameter	Requirement	Part no.
MCO 90 EVO	K120	1 - 9999	QM-GRADE 16 rectangular mesh	for secondary screening units	16 mm	Upper deck - NSE single-deck version; Upper deck - NSE double-deck version	Screen section, large	4 mm	4 pc.	2220306
				for secondary screening units	16 mm	Upper deck - NSE double-deck version	Screen section, small	4 mm	1 pc.	2220305
			QM-GRADE 18 rectangular mesh	for secondary screening units	18 mm	Upper deck - NSE single-deck version; Upper deck - NSE double-deck version	Screen section, large	5 mm	4 pc.	2395288
				for secondary screening units	18 mm	Upper deck - NSE double-deck version	Screen section, small	5 mm	1 pc.	2395289

WIRE MESH										
Series code	Serial code	Series range	Part	Version	Clear mesh size	Deck	Position	Wire diameter	Requirement	Part no.
MCO 90 EVO	K120	1 - 9999	QM-GRADE 20 rectangular mesh	for secondary screening units	20 mm	Upper deck - NSE single-deck version; Upper deck - NSE double-deck version	Screen section, large	5 mm	4 pc.	2234861
				for secondary screening units	20 mm	Upper deck - NSE double-deck version	Screen section, small	5 mm	1 pc.	2234862
			QM-GRADE 22 rectangular mesh	for secondary screening units	22 mm	Upper deck - NSE single-deck version; Upper deck - NSE double-deck version	Screen section, large	6 mm	4 pc.	2292815
				for secondary screening units	22 mm	Upper deck - NSE double-deck version	Screen section, small	6 mm	1 pc.	2292816
			QM-GRADE 25 rectangular mesh	for secondary screening units	25 mm	Upper deck - NSE double-deck version	Screen section, small	6 mm	1 pc.	M20001410

WIRE MESH										
Series code	Serial code	Series range	Part	Version	Clear mesh size	Deck	Position	Wire diameter	Requirement	Part no.
MCO 90 EVO	K120	1 - 9999	QM-GRADE 25 rectangular mesh	for secondary screening units	25 mm	Upper deck - NSE single-deck version; Upper deck - NSE double-deck version	Screen section, large	6 mm	4 pc.	M20001411
			QM-GRADE 28 rectangular mesh	for secondary screening units	28 mm	Upper deck - NSE double-deck version	Screen section, small	6 mm	1 pc.	M20001531
				for secondary screening units	28 mm	Upper deck - NSE single-deck version; Upper deck - NSE double-deck version	Screen section, large	6 mm	4 pc.	M20001532
			QM-GRADE 30 rectangular mesh	for secondary screening units	30 mm	Upper deck - NSE double-deck version	Screen section, small	8 mm	1 pc.	2234871

WIRE MESH										
Series code	Serial code	Series range	Part	Version	Clear mesh size	Deck	Position	Wire diameter	Requirement	Part no.
MCO 90 EVO	K120	1 - 9999	QM-GRADE 30 rectangular mesh	for secondary screening units	30 mm	Upper deck - NSE single-deck version; Upper deck - NSE double-deck version	Screen section, large	8 mm	4 pc.	2234867
			QM-GRADE 32 rectangular mesh	for secondary screening units	32 mm	Upper deck - NSE single-deck version; Upper deck - NSE double-deck version	Screen section, large	6 mm	4 pc.	2292821
				for secondary screening units	32 mm	Upper deck - NSE double-deck version	Screen section, small	6 mm	1 pc.	2292822
			QM-GRADE 35 rectangular mesh	for secondary screening units	35 mm	Upper deck - NSE single-deck version; Upper deck - NSE double-deck version	Screen section, large	8 mm	4 pc.	2234878

WIRE MESH										
Series code	Serial code	Series range	Part	Version	Clear mesh size	Deck	Position	Wire diameter	Requirement	Part no.
MCO 90 EVO	K120	1 - 9999	QM-GRADE 35 rectangular mesh	for secondary screening units	35 mm	Upper deck - NSE double-deck version	Screen section, small	8 mm	1 pc.	2234880
			QM-GRADE 40 rectangular mesh	for secondary screening units	40 mm	Upper deck - NSE single-deck version; Upper deck - NSE double-deck version	Screen section, large	8 mm	4 pc.	M20001405
				for secondary screening units	40 mm	Upper deck - NSE double-deck version	Screen section, small	8 mm	1 pc.	M20001404
			QM-GRADE 45 rectangular mesh	for secondary screening units	45 mm	Upper deck - NSE single-deck version; Upper deck - NSE double-deck version	Screen section, large	8 mm	4 pc.	M20001640
				for secondary screening units	45 mm	Upper deck - NSE double-deck version	Screen section, small	8 mm	1 pc.	M20001639

WIRE MESH										
Series code	Serial code	Series range	Part	Version	Clear mesh size	Deck	Position	Wire diameter	Requirement	Part no.
MCO 90 EVO	K120	1 - 9999	QM-GRADE 50 rectangular mesh	for secondary screening units	50 mm	Upper deck - NSE double-deck version	Screen section, small	10 mm	1 pc.	M20001369
				for secondary screening units	50 mm	Upper deck - NSE single-deck version; Upper deck - NSE double-deck version	Screen section, large	10 mm	4 pc.	M20001370
			QM-GRADE 55 rectangular mesh	for secondary screening units	55 mm	Upper deck - NSE single-deck version; Upper deck - NSE double-deck version	Screen section, large	10 mm	4 pc.	M20001571
				for secondary screening units	55 mm	Upper deck - NSE double-deck version	Screen section, small	10 mm	1 pc.	M20001579
			QM-GRADE 6 rectangular mesh	for pre-screening units	6 mm	Upper deck - NSE single-deck version	Screen section, large	2.5 mm	4 pc.	2586828

WIRE MESH										
Series code	Serial code	Series range	Part	Version	Clear mesh size	Deck	Position	Wire diameter	Requirement	Part no.
MCO 90 EVO	K120	1 - 9999	QM-GRADE 60 rectangular mesh	for secondary screening units	60 mm	Upper deck - NSE single-deck version; Upper deck - NSE double-deck version	Screen section, large	10 mm	4 pc.	M20001716
				for secondary screening units	60 mm	Upper deck - NSE double-deck version	Screen section, small	10 mm	1 pc.	M20001715
			QM-GRADE 65 rectangular mesh	for secondary screening units	65 mm	Upper deck - NSE single-deck version; Upper deck - NSE double-deck version	Screen section, large	10 mm	4 pc.	M20001529
				for secondary screening units	65 mm	Upper deck - NSE double-deck version	Screen section, small	10 mm	1 pc.	M20001530
			QM-GRADE 7 rectangular mesh	for pre-screening units	7 mm	Upper deck - NSE single-deck version	Screen section, large	3 mm	4 pc.	2591533

WIRE MESH										
Series code	Serial code	Series range	Part	Version	Clear mesh size	Deck	Position	Wire diameter	Requirement	Part no.
MCO 90 EVO	K120	1 - 9999	QM-GRADE 70 rectangular mesh	for secondary screening units	70 mm	Upper deck - NSE single-deck version; Upper deck - NSE double-deck version	Screen section, large	10 mm	4 pc.	M20001678
				for secondary screening units	70 mm	Upper deck - NSE double-deck version	Screen section, small	10 mm	1 pc.	M20001679
			QM-GRADE 8 rectangular mesh	for secondary screening units	8 mm	Upper deck - NSE single-deck version; Upper deck - NSE double-deck version	Screen section, large	3 mm	4 pc.	2632145
				for secondary screening units	8 mm	Upper deck - NSE double-deck version	Screen section, small	3 mm	1 pc.	2632147

WIRE MESH										
Series code	Serial code	Series range	Part	Version	Clear mesh size	Deck	Position	Wire diameter	Requirement	Part no.
MCO 90 EVO	K120	1 - 9999	QM-GRADE 80 rectangular mesh	for secondary screening units	80 mm	Upper deck - NSE single-deck version; Upper deck - NSE double-deck version	Screen section, large	10 mm	4 pc.	2202449
				for secondary screening units	80 mm	Upper deck - NSE double-deck version	Screen section, small	10 mm	1 pc.	2202450
			QM-GRADE 9 rectangular mesh	for MOBI-SCREEN series	9 mm	Upper deck - NSE single-deck version	Screen section, large	3 mm	4 pc.	2896821
			QM-GRADE 90 rectangular mesh	for secondary screening units	90 mm	Upper deck - NSE single-deck version; Upper deck - NSE double-deck version	Screen section, large	10 mm	4 pc.	2200097
				for secondary screening units	90 mm	Upper deck - NSE double-deck version	Screen section, small	10 mm	1 pc.	2200098

WIRE MESH										
Series code	Serial code	Series range	Part	Version	Clear mesh size	Deck	Position	Wire diameter	Requirement	Part no.
MCO 90 EVO	K120	15 - 9999	QM-GRADE 10 rectangular mesh	for pre-screening units	10 mm	Lower deck - NSE double-deck version		2.5 mm	2 pc.	3063034
			QM-GRADE 11 rectangular mesh	for pre-screening units	11 mm	Lower deck - NSE double-deck version		3 mm	2 pc.	3063035
			QM-GRADE 12 rectangular mesh	for pre-screening units	12 mm	Lower deck - NSE double-deck version		4 mm	2 pc.	3063036
			QM-GRADE 15 rectangular mesh	for pre-screening units	15 mm	Lower deck - NSE double-deck version		4 mm	2 pc.	3063037
			QM-GRADE 16 rectangular mesh	for pre-screening units	16 mm	Lower deck - NSE double-deck version		4 mm	2 pc.	3063038
			QM-GRADE 18 rectangular mesh	for pre-screening units	18 mm	Lower deck - NSE double-deck version		4 mm	2 pc.	3063039

WIRE MESH										
Series code	Serial code	Series range	Part	Version	Clear mesh size	Deck	Position	Wire diameter	Requirement	Part no.
MCO 90 EVO	K120	15 - 9999	QM-GRADE 20 rectangular mesh	for pre-screening units	20 mm	Lower deck - NSE double-deck version		4 mm	2 pc.	3063040
			QM-GRADE 22 rectangular mesh	for pre-screening units	22 mm	Lower deck - NSE double-deck version		5 mm	2 pc.	3063041
			QM-GRADE 25 rectangular mesh	for pre-screening units	25 mm	Lower deck - NSE double-deck version		5 mm	2 pc.	3063042
			QM-GRADE 28 rectangular mesh	for pre-screening units	28 mm	Lower deck - NSE double-deck version		5 mm	2 pc.	3063043
			QM-GRADE 30 rectangular mesh	for pre-screening units	30 mm	Lower deck - NSE double-deck version		6 mm	2 pc.	3063044
			QM-GRADE 35 rectangular mesh	for pre-screening units	35 mm	Lower deck - NSE double-deck version		6 mm	2 pc.	3063045

WIRE MESH

Series code	Serial code	Series range	Part	Version	Clear mesh size	Deck	Position	Wire diameter	Requirement	Part no.
MCO 90 EVO	K120	15 - 9999	QM-GRADE 40 rectangular mesh	for pre-screening units	40 mm	Lower deck - NSE double-deck version		6 mm	2 pc.	3063046
			QM-GRADE 5 rectangular mesh	for pre-screening units	5 mm	Lower deck - NSE double-deck version		2 mm	2 pc.	3063031
			QM-GRADE 6 rectangular mesh	for pre-screening units	6 mm	Lower deck - NSE double-deck version		2 mm	2 pc.	3063032
			QM-GRADE 9 rectangular mesh	for pre-screening units	9 mm	Lower deck - NSE double-deck version		2.5 mm	2 pc.	WX3063033
	K121	1 - 9999	QM-GRADE 10 rectangular mesh	for secondary screening units	10 mm	Upper deck - NSE single-deck version	Screen section, large	4 mm	4 pc.	2234836
			QM-GRADE 11 rectangular mesh	for pre-screening units	11 mm	Upper deck - NSE single-deck version	Screen section, large	4 mm	4 pc.	2220302

WIRE MESH										
Series code	Serial code	Series range	Part	Version	Clear mesh size	Deck	Position	Wire diameter	Requirement	Part no.
MCO 90 EVO	K121	1 - 9999	QM-GRADE 12 rectangular mesh	for secondary screening units	12 mm	Upper deck - NSE single-deck version	Screen section, large	4 mm	4 pc.	M20001524
			QM-GRADE 13 rectangular mesh	for pre-screening units	13 mm	Upper deck - NSE single-deck version	Screen section, large	4 mm	4 pc.	2570206
			QM-GRADE 15 rectangular mesh	for secondary screening units	15 mm	Upper deck - NSE single-deck version	Screen section, large	4 mm	4 pc.	M20001533
			QM-GRADE 16 rectangular mesh	for secondary screening units	16 mm	Upper deck - NSE single-deck version	Screen section, large	4 mm	4 pc.	2220306
			QM-GRADE 18 rectangular mesh	for secondary screening units	18 mm	Upper deck - NSE single-deck version	Screen section, large	5 mm	4 pc.	2395288
			QM-GRADE 20 rectangular mesh	for secondary screening units	20 mm	Upper deck - NSE single-deck version	Screen section, large	5 mm	4 pc.	2234861

WIRE MESH										
Series code	Serial code	Series range	Part	Version	Clear mesh size	Deck	Position	Wire diameter	Requirement	Part no.
MCO 90 EVO	K121	1 - 9999	QM-GRADE 22 rectangular mesh	for secondary screening units	22 mm	Upper deck - NSE single-deck version	Screen section, large	6 mm	4 pc.	2292815
			QM-GRADE 25 rectangular mesh	for secondary screening units	25 mm	Upper deck - NSE single-deck version	Screen section, large	6 mm	4 pc.	M20001411
			QM-GRADE 28 rectangular mesh	for secondary screening units	28 mm	Upper deck - NSE single-deck version	Screen section, large	6 mm	4 pc.	M20001532
			QM-GRADE 30 rectangular mesh	for secondary screening units	30 mm	Upper deck - NSE single-deck version	Screen section, large	8 mm	4 pc.	2234867
			QM-GRADE 32 rectangular mesh	for secondary screening units	32 mm	Upper deck - NSE single-deck version	Screen section, large	6 mm	4 pc.	2292821
			QM-GRADE 35 rectangular mesh	for secondary screening units	35 mm	Upper deck - NSE single-deck version	Screen section, large	8 mm	4 pc.	2234878

WIRE MESH										
Series code	Serial code	Series range	Part	Version	Clear mesh size	Deck	Position	Wire diameter	Requirement	Part no.
MCO 90 EVO	K121	1 - 9999	QM-GRADE 40 rectangular mesh	for secondary screening units	40 mm	Upper deck - NSE single-deck version	Screen section, large	8 mm	4 pc.	M20001405
			QM-GRADE 45 rectangular mesh	for secondary screening units	45 mm	Upper deck - NSE single-deck version	Screen section, large	8 mm	4 pc.	M20001640
			QM-GRADE 50 rectangular mesh	for secondary screening units	50 mm	Upper deck - NSE single-deck version	Screen section, large	10 mm	4 pc.	M20001370
			QM-GRADE 55 rectangular mesh	for secondary screening units	55 mm	Upper deck - NSE single-deck version	Screen section, large	10 mm	4 pc.	M20001571
			QM-GRADE 6 rectangular mesh	for pre-screening units	6 mm	Upper deck - NSE single-deck version	Screen section, large	2.5 mm	4 pc.	2586828
			QM-GRADE 60 rectangular mesh	for secondary screening units	60 mm	Upper deck - NSE single-deck version	Screen section, large	10 mm	4 pc.	M20001716

WIRE MESH										
Series code	Serial code	Series range	Part	Version	Clear mesh size	Deck	Position	Wire diameter	Requirement	Part no.
MCO 90 EVO	K121	1 - 9999	QM-GRADE 65 rectangular mesh	for secondary screening units	65 mm	Upper deck - NSE single-deck version	Screen section, large	10 mm	4 pc.	M20001529
			QM-GRADE 7 rectangular mesh	for pre-screening units	7 mm	Upper deck - NSE single-deck version	Screen section, large	3 mm	4 pc.	2591533
			QM-GRADE 70 rectangular mesh	for secondary screening units	70 mm	Upper deck - NSE single-deck version	Screen section, large	10 mm	4 pc.	M20001678
			QM-GRADE 8 rectangular mesh	for secondary screening units	8 mm	Upper deck - NSE single-deck version	Screen section, large	3 mm	4 pc.	2632145
			QM-GRADE 80 rectangular mesh	for secondary screening units	80 mm	Upper deck - NSE single-deck version	Screen section, large	10 mm	4 pc.	2202449
			QM-GRADE 9 rectangular mesh	for MOBI-SCREEN series	9 mm	Upper deck - NSE single-deck version	Screen section, large	3 mm	4 pc.	2896821

WIRE MESH										
Series code	Serial code	Series range	Part	Version	Clear mesh size	Deck	Position	Wire diameter	Requirement	Part no.
MCO 90 EVO	K121	1 - 9999	QM-GRADE 90 rectangular mesh	for secondary screening units	90 mm	Upper deck - NSE single-deck version	Screen section, large	10 mm	4 pc.	2200097
		52 - 9999	QM-GRADE 10 rectangular mesh	for pre-screening units	10 mm	Lower deck - NSE double-deck version		2.5 mm	2 pc.	3063034
			QM-GRADE 11 rectangular mesh	for pre-screening units	11 mm	Lower deck - NSE double-deck version		3 mm	2 pc.	3063035
			QM-GRADE 12 rectangular mesh	for pre-screening units	12 mm	Lower deck - NSE double-deck version		4 mm	2 pc.	3063036
			QM-GRADE 15 rectangular mesh	for pre-screening units	15 mm	Lower deck - NSE double-deck version		4 mm	2 pc.	3063037
			QM-GRADE 16 rectangular mesh	for pre-screening units	16 mm	Lower deck - NSE double-deck version		4 mm	2 pc.	3063038

WIRE MESH										
Series code	Serial code	Series range	Part	Version	Clear mesh size	Deck	Posi-tion	Wire dia-meter	Re-quire-ment	Part no.
MCO 90 EVO	K121	52 - 9999	QM-GRADE 18 rect-angular mesh	for pre-screening units	18 mm	Lower deck - NSE doubl-e-deck ver-sion		4 mm	2 pc.	3063039
			QM-GRADE 20 rect-angular mesh	for pre-screening units	20 mm	Lower deck - NSE doubl-e-deck ver-sion		4 mm	2 pc.	3063040
			QM-GRADE 22 rect-angular mesh	for pre-screening units	22 mm	Lower deck - NSE doubl-e-deck ver-sion		5 mm	2 pc.	3063041
			QM-GRADE 25 rect-angular mesh	for pre-screening units	25 mm	Lower deck - NSE doubl-e-deck ver-sion		5 mm	2 pc.	3063042
			QM-GRADE 28 rect-angular mesh	for pre-screening units	28 mm	Lower deck - NSE doubl-e-deck ver-sion		5 mm	2 pc.	3063043
			QM-GRADE 30 rect-angular mesh	for pre-screening units	30 mm	Lower deck - NSE doubl-e-deck ver-sion		6 mm	2 pc.	3063044

WIRE MESH										
Series code	Serial code	Series range	Part	Version	Clear mesh size	Deck	Position	Wire diameter	Requirement	Part no.
MCO 90 EVO	K121	52 - 9999	QM-GRADE 35 rectangular mesh	for pre-screening units	35 mm	Lower deck - NSE double-deck version		6 mm	2 pc.	3063045
			QM-GRADE 40 rectangular mesh	for pre-screening units	40 mm	Lower deck - NSE double-deck version		6 mm	2 pc.	3063046
			QM-GRADE 5 rectangular mesh	for pre-screening units	5 mm	Lower deck - NSE double-deck version		2 mm	2 pc.	3063031
			QM-GRADE 6 rectangular mesh	for pre-screening units	6 mm	Lower deck - NSE double-deck version		2 mm	2 pc.	3063032
			QM-GRADE 9 rectangular mesh	for pre-screening units	9 mm	Lower deck - NSE double-deck version		2.5 mm	2 pc.	WX3063033
MSS 802 EVO	K082	10 - 9999	QM-GRADE 10 rectangular mesh	for MOBI-SCREEN series	10 mm	Upper deck		4 mm	4 pc.	2428276
			QM-GRADE 100 rectangular mesh	for MOBI-SCREEN series	100 mm	Upper deck		12 mm	4 pc.	2447154

WIRE MESH										
Series code	Serial code	Series range	Part	Version	Clear mesh size	Deck	Posi-tion	Wire dia-meter	Re-quire-ment	Part no.
MSS 802 EVO	K082	10 - 9999	QM-GRADE 11 rect-angular mesh	for MOBI-SCREEN series	11 mm	Upper deck		4 mm	4 pc.	2447085
			QM-GRADE 12 rect-angular mesh	for MOBI-SCREEN series	12 mm	Upper deck		4 mm	4 pc.	2354096
			QM-GRADE 15 rect-angular mesh	for MOBI-SCREEN series	15 mm	Upper deck		5 mm	4 pc.	2447094
				for MOBI-SCREEN series	15 mm	Lower deck		4 mm	3 pc.	3072845
			QM-GRADE 16 rect-angular mesh	for MOBI-SCREEN series	16 mm	Upper deck		5 mm	4 pc.	2447110
			QM-GRADE 18 rect-angular mesh	for MOBI-SCREEN series	18 mm	Upper deck		5 mm	4 pc.	2447118
			QM-GRADE 20 rect-angular mesh	for MOBI-SCREEN series	20 mm	Lower deck		5 mm	3 pc.	2722951
				for MOBI-SCREEN series	20 mm	Upper deck		5 mm	4 pc.	2354095
			QM-GRADE 22 rect-angular mesh	for MOBI-SCREEN series	22 mm	Lower deck		5 mm	3 pc.	3078684

WIRE MESH										
Series code	Serial code	Series range	Part	Version	Clear mesh size	Deck	Position	Wire diameter	Requirement	Part no.
MSS 802 EVO	K082	10 - 9999	QM-GRADE 25 rectangular mesh	for MOBISCREEN series	25 mm	Upper deck		6.3 mm	4 pc.	2428275
				for MOBISCREEN series	25 mm	Lower deck		5 mm	3 pc.	2662874
			QM-GRADE 3 rectangular mesh	for MOBISCREEN series	3 mm	Lower deck		1.6 mm	3 pc.	3068903
			QM-GRADE 30 rectangular mesh	for MOBISCREEN series	30 mm	Upper deck		8 mm	4 pc.	2950561
				for MOBISCREEN series	30 mm	Upper deck		8 mm	4 pc.	2447130
				for MOBISCREEN series	30 mm	Lower deck		6 mm	3 pc.	2662881
			QM-GRADE 35 rectangular mesh	for MOBISCREEN series	35 mm	Upper deck		8 mm	4 pc.	2354093
				for MOBISCREEN series	35 mm	Lower deck		8 mm	3 pc.	3020387
			QM-GRADE 38 rectangular mesh	for MOBISCREEN series	38 mm	Lower deck		8 mm	3 pc.	2662873
				for MOBISCREEN series	38 mm	Upper deck		8 mm	4 pc.	2639254
			QM-GRADE 40 rectangular mesh	for MOBISCREEN series	40 mm	Lower deck		8 mm	3 pc.	2662872
				for MOBISCREEN series	40 mm	Upper deck		8 mm	4 pc.	2447134

WIRE MESH										
Series code	Serial code	Series range	Part	Version	Clear mesh size	Deck	Position	Wire diameter	Requirement	Part no.
MSS 802 EVO	K082	10 - 9999	QM-GRADE 45 rectangular mesh	for MOBISCREEN series	45 mm	Upper deck		8 mm	4 pc.	2354091
				for MOBISCREEN series	45 mm	Lower deck		8 mm	3 pc.	2662883
			QM-GRADE 50 rectangular mesh	for MOBISCREEN series	50 mm	Lower deck		8 mm	3 pc.	3008231
				for MOBISCREEN series	50 mm	Upper deck		8 mm	4 pc.	2447141
			QM-GRADE 55 rectangular mesh	for MOBISCREEN series	55 mm	Upper deck		10 mm	4 pc.	2447143
			QM-GRADE 6 rectangular mesh	for MOBISCREEN series	6 mm	Upper deck		2.5 mm	4 pc.	2594308
			QM-GRADE 60 rectangular mesh	for MOBISCREEN series	60 mm	Upper deck		10 mm	4 pc.	2447147
			QM-GRADE 65 rectangular mesh	for MOBISCREEN series	65 mm	Upper deck		10 mm	4 pc.	2447148
			QM-GRADE 7 rectangular mesh	for MOBISCREEN series	7 mm	Upper deck		3 mm	4 pc.	2447170
			QM-GRADE 70 rectangular mesh	for MOBISCREEN series	70 mm	Upper deck		10 mm	4 pc.	2447150

WIRE MESH										
Series code	Serial code	Series range	Part	Version	Clear mesh size	Deck	Position	Wire diameter	Requirement	Part no.
MSS 802 EVO	K082	10 - 9999	QM-GRADE 75 rectangular mesh	for MOBISCREEN series	75 mm	Upper deck		10 mm	4 pc.	2354086
			QM-GRADE 8 rectangular mesh	for MOBISCREEN series	8 mm	Upper deck		3 mm	4 pc.	2447171
			QM-GRADE 9 rectangular mesh	for MOBISCREEN series	9 mm	Upper deck		3 mm	4 pc.	2735923
			QM-GRADE 90 rectangular mesh	for MOBISCREEN series	90 mm	Upper deck		12 mm	4 pc.	2447153
MR 130 PRO	K125	1 - 9999	Dummy rubber	for pre-screening units		Lower deck			1 pc.	WX3157503
			QM-GRADE 10 rectangular mesh	for pre-screening units	10 mm	Lower deck - NSE	Screen section, large	4 mm	3 pc.	2973774
				for secondary screening units	10 mm	Upper deck - NSE	Screen section, small	4 mm	1 pc.	2208582
				for pre-screening units	10 mm	Lower deck		4 mm	1 pc.	2341115
				For use with MOBISCREEN series and secondary screening units	10 mm	Upper deck - NSE	Screen section, large	4 mm	4 pc.	2208580

WIRE MESH										
Series code	Serial code	Series range	Part	Version	Clear mesh size	Deck	Position	Wire diameter	Requirement	Part no.
MR 130 PRO	K125	1 - 9999	QM-GRADE 11 rectangular mesh	for pre-screening units	11 mm	Upper deck - NSE	Screen section, small	4 mm	1 pc.	2199927
				for MOBI-SCREEN series	11 mm	Upper deck - NSE	Screen section, large	4 mm	5 pc.	2199916
				for pre-screening units	11 mm	Lower deck - NSE	Screen section, large	4 mm	3 pc.	2973776
			QM-GRADE 12 rectangular mesh	for secondary screening units & Mobiscreen series	12 mm	Upper deck - NSE	Screen section, large	4 mm	4 pc.	2448849
				for secondary screening units	12 mm	Upper deck - NSE	Screen section, small	4 mm	1 pc.	2234825
				for pre-screening units	12 mm	Lower deck		4 mm	1 pc.	2298433
			QM-GRADE 15 rectangular mesh	for pre-screening units	15 mm	Lower deck		4 mm	1 pc.	2341117
				for secondary screening units	15 mm	Upper deck - NSE	Screen section, large	4 mm	5 pc.	2212424
				for secondary screening units	15 mm	Upper deck - NSE	Screen section, small	4 mm	1 pc.	2212430
			QM-GRADE 16 rectangular mesh	for pre-screening units	16 mm	Lower deck - NSE	Screen section, large	4 mm	3 pc.	2973777
				for secondary screening units	16 mm	Upper deck - NSE	Screen section, large	4 mm	5 pc.	M10006857
				for secondary screening units	16 mm	Upper deck - NSE	Screen section, small	4 mm	1 pc.	M20001562

WIRE MESH										
Series code	Serial code	Series range	Part	Version	Clear mesh size	Deck	Position	Wire diameter	Requirement	Part no.
MR 130 PRO	K125	1 - 9999	QM-GRADE 18 rectangular mesh	for secondary screening units	18 mm	Upper deck - NSE	Screen section, small	4 mm	1 pc.	2193527
				for pre-screening units	18 mm	Lower deck - NSE	Screen section, large	5 mm	3 pc.	2973778
				for secondary screening units	18 mm	Upper deck - NSE	Screen section, large	4 mm	5 pc.	2193517
				for pre-screening units	18 mm	Lower deck		6 mm	1 pc.	2341118
			QM-GRADE 20 rectangular mesh	for pre-screening units	20 mm	Lower deck - NSE	Screen section, large	5 mm	3 pc.	2973779
				for secondary screening units	20 mm	Upper deck - NSE	Screen section, small	5 mm	1 pc.	M20001561
				For use with MOBI-SCREEN series and secondary screening units	20 mm	Upper deck - NSE	Screen section, large	5 mm	5 pc.	M10003491
				for pre-screening units	20 mm	Lower deck		6 mm	1 pc.	2341119
			QM-GRADE 22 rectangular mesh	for secondary screening units	22 mm	Upper deck - NSE	Screen section, small	5 mm	1 pc.	2215293
				for pre-screening units	22 mm	Lower deck		5 mm	1 pc.	2642432
				for secondary screening units	22 mm	Upper deck - NSE	Screen section, large	5 mm	5 pc.	M10004471

WIRE MESH										
Series code	Serial code	Series range	Part	Version	Clear mesh size	Deck	Position	Wire diameter	Requirement	Part no.
MR 130 PRO	K125	1 - 9999	QM-GRADE 25 rectangular mesh	for secondary screening units	25 mm	Upper deck - NSE	Screen section, small	6 mm	1 pc.	M20001552
				for pre-screening units	25 mm	Lower deck - NSE	Screen section, large	6 mm	3 pc.	2973780
				For use with MOBI-SCREEN series and secondary screening units	25 mm	Upper deck - NSE	Screen section, large	6 mm	5 pc.	M20001551
				for pre-screening units	25 mm	Lower deck		6 mm	1 pc.	2298429
			QM-GRADE 28 rectangular mesh	for secondary screening units	28 mm	Upper deck - NSE	Screen section, small	6 mm	1 pc.	M20001714
				For use with MOBI-SCREEN series and secondary screening units	28 mm	Upper deck - NSE	Screen section, large	6 mm	5 pc.	M20001713
			QM-GRADE 30 rectangular mesh	For use with MOBI-SCREEN series and secondary screening units	30 mm	Upper deck - NSE	Screen section, large	7 mm	5 pc.	2234476
				for secondary screening units	30 mm	Upper deck - NSE	Screen section, small	7 mm	1 pc.	2234480
				for pre-screening units	30 mm	Lower deck		8 mm	1 pc.	2341120

WIRE MESH										
Series code	Serial code	Series range	Part	Version	Clear mesh size	Deck	Position	Wire diameter	Requirement	Part no.
MR 130 PRO	K125	1 - 9999	QM-GRADE 32 rectangular mesh	for secondary screening units	32 mm	Upper deck - NSE	Screen section, large	7 mm	5 pc.	M20001749
				for pre-screening units	32 mm	Lower deck		8 mm	1 pc.	2341121
				for secondary screening units	32 mm	Upper deck - NSE	Screen section, small	7 mm	1 pc.	M20001750
			QM-GRADE 35 rectangular mesh	for pre-screening units	35 mm	Lower deck		8 mm	1 pc.	2298424
				for secondary screening units	35 mm	Upper deck - NSE	Screen section, small	8 mm	1 pc.	M20001254
				for secondary screening units	35 mm	Upper deck - NSE	Screen section, large	8 mm	5 pc.	M10003179
				for pre-screening units	35 mm	Lower deck - NSE	Screen section, large	8 mm	3 pc.	2902619
			QM-GRADE 40 rectangular mesh	for pre-screening units	40 mm	Lower deck		8 mm	1 pc.	2341122
				for secondary screening units	40 mm	Upper deck - NSE	Screen section, small	8 mm	1 pc.	M20000795
				For use with MOBI-SCREEN series and secondary screening units	40 mm	Upper deck - NSE	Screen section, large	8 mm	5 pc.	M10005149
				for pre-screening units	40 mm	Lower deck - NSE	Screen section, large	8 mm	3 pc.	2973902

WIRE MESH										
Series code	Serial code	Series range	Part	Version	Clear mesh size	Deck	Position	Wire diameter	Requirement	Part no.
MR 130 PRO	K125	1 - 9999	QM-GRADE 45 rectangular mesh	For use with MOBI-SCREEN series and secondary screening units	45 mm	Upper deck - NSE	Screen section, large	8 mm	5 pc.	M20001595
				for secondary screening units	45 mm	Upper deck - NSE	Screen section, small	8 mm	1 pc.	M20001596
				for pre-screening units	45 mm	Lower deck - NSE	Screen section, large	8 mm	3 pc.	2973903
				for pre-screening units	45 mm	Lower deck		8 mm	1 pc.	2341123
			QM-GRADE 5 rectangular mesh	for pre-screening units	5 mm	Lower deck - NSE	Screen section, large	2.2 mm	3 pc.	2973773
			QM-GRADE 50 rectangular mesh	for secondary screening units	50 mm	Upper deck - NSE	Screen section, small	10 mm	1 pc.	M20001558
				For use with MOBI-SCREEN series and secondary screening units	50 mm	Upper deck - NSE	Screen section, large	10 mm	5 pc.	M20001298
				for pre-screening units	50 mm	Lower deck		10 mm	1 pc.	2341124
				for pre-screening units	50 mm	Lower deck - NSE	Screen section, large	8 mm	3 pc.	2973904

WIRE MESH										
Series code	Serial code	Series range	Part	Version	Clear mesh size	Deck	Position	Wire diameter	Requirement	Part no.
MR 130 PRO	K125	1 - 9999	QM-GRADE 55 rectangular mesh	For use with MOBI-SCREEN series and secondary screening units	55 mm	Upper deck - NSE	Screen section, large	10 mm	5 pc.	M20001553
				for secondary screening units	55 mm	Upper deck - NSE	Screen section, small	10 mm	1 pc.	M20001554
				for pre-screening units	55 mm	Lower deck - NSE	Screen section, large	8 mm	3 pc.	2973905
				for pre-screening units	55 mm	Lower deck		10 mm	1 pc.	2341126
			QM-GRADE 60 rectangular mesh	For use with MOBI-SCREEN series and secondary screening units	60 mm	Upper deck - NSE	Screen section, large	10 mm	5 pc.	M20001555
				for secondary screening units	60 mm	Upper deck - NSE	Screen section, small	10 mm	1 pc.	M20001556
			QM-GRADE 6.5 rectangular mesh	for pre-screening units	6.5 mm	Lower deck		2 mm	1 pc.	2601415
			QM-GRADE 65 rectangular mesh	for secondary screening units	65 mm	Upper deck - NSE	Screen section, small	10 mm	1 pc.	M20001560
				For use with MOBI-SCREEN series and secondary screening units	65 mm	Upper deck - NSE	Screen section, large	10 mm	5 pc.	M10010425

WIRE MESH										
Series code	Serial code	Series range	Part	Version	Clear mesh size	Deck	Position	Wire diameter	Requirement	Part no.
MR 130 PRO	K125	1 - 9999	QM-GRADE 70 rectangular mesh	for secondary screening units	70 mm	Upper deck - NSE	Screen section, small	10 mm	1 pc.	M20001753
				For use with MOBI-SCREEN series and secondary screening units	70 mm	Upper deck - NSE	Screen section, large	10 mm	5 pc.	M20001752
			QM-GRADE 8 rectangular mesh	for secondary screening units	8 mm	Upper deck - NSE	Screen section, small	3 mm	1 pc.	2348798
				For use with MOBI-SCREEN series and secondary screening units	8 mm	Upper deck - NSE	Screen section, large	3 mm	4 pc.	2348799
			QM-GRADE 80 rectangular mesh	for secondary screening units	80 mm	Upper deck - NSE	Screen section, large	10 mm	5 pc.	2202978
				for secondary screening units	80 mm	Upper deck - NSE	Screen section, small	10 mm	1 pc.	2202979
			QM-GRADE 90 rectangular mesh	for secondary screening units	90 mm	Upper deck - NSE	Screen section, small	10 mm	1 pc.	2192481
				for secondary screening units	90 mm	Upper deck - NSE	Screen section, large	10 mm	5 pc.	2192479
MS 15 Z	K047	1 - 9999	QM-GRADE 10 rectangular mesh	for MOBI-SCREEN series	10 mm	Lower deck	Screen section, large	3 mm	3 pc.	M20001734
				for MOBI-SCREEN series	10 mm	Upper deck	Screen section, large	3 mm	4 pc.	M20001496

WIRE MESH										
Series code	Serial code	Series range	Part	Version	Clear mesh size	Deck	Position	Wire diameter	Requirement	Part no.
MS 15 Z	K047	1 - 9999	QM-GRADE 12 rectangular mesh	for MOBISCREEN series	12 mm	Lower deck	Screen section, large	3 mm	3 pc.	2197550
				for MOBISCREEN series	12 mm	Upper deck	Screen section, large	4 mm	4 pc.	M20000872
			QM-GRADE 13 rectangular mesh	for MOBISCREEN series	13 mm	Upper deck	Screen section, large	4 mm	4 pc.	M20000621
			QM-GRADE 14 rectangular mesh	for MOBISCREEN series	14 mm	Upper deck	Screen section, large	4 mm	4 pc.	M20001027
			QM-GRADE 15 rectangular mesh	for MOBISCREEN series	15 mm	Upper deck	Screen section, large	4 mm	4 pc.	M20001735
				for MOBISCREEN series	15 mm	Lower deck	Screen section, large	4 mm	3 pc.	2198322
			QM-GRADE 16 rectangular mesh	for MOBISCREEN series	16 mm	Upper deck	Screen section, large	4 mm	4 pc.	M20000833
			QM-GRADE 18 rectangular mesh	for MOBISCREEN series	18 mm	Upper deck	Screen section, large	4 mm	4 pc.	M20001327
				for MOBISCREEN series	18 mm	Lower deck	Screen section, large	4 mm	3 pc.	M20001499
			QM-GRADE 20 rectangular mesh	for MOBISCREEN series	20 mm	Lower deck	Screen section, large	5 mm	3 pc.	M20001453
				for MOBISCREEN series	20 mm	Upper deck	Screen section, large	5 mm	4 pc.	2234507

WIRE MESH										
Series code	Serial code	Series range	Part	Version	Clear mesh size	Deck	Position	Wire diameter	Requirement	Part no.
MS 15 Z	K047	1 - 9999	QM-GRADE 22 rectangular mesh	for MOBI-SCREEN series	22 mm	Upper deck	Screen section, large	5 mm	4 pc.	M20000690
			QM-GRADE 25 rectangular mesh	for MOBI-SCREEN series	25 mm	Upper deck	Screen section, large	5 mm	4 pc.	M20000958
				for MOBI-SCREEN series	25 mm	Lower deck	Screen section, large	5 mm	3 pc.	M20001563
			QM-GRADE 28 rectangular mesh	for MOBI-SCREEN series	28 mm	Lower deck	Screen section, large	6 mm	3 pc.	2244893
				for MOBI-SCREEN series	28 mm	Upper deck	Screen section, large	6 mm	4 pc.	M20001629
			QM-GRADE 30 rectangular mesh	for MOBI-SCREEN series	30 mm	Upper deck	Screen section, large	8 mm	4 pc.	2234516
				for MOBI-SCREEN series	30 mm	Lower deck	Screen section, large	6 mm	3 pc.	M20001564
			QM-GRADE 32 rectangular mesh	for MOBI-SCREEN series	32 mm	Lower deck	Screen section, large	6 mm	3 pc.	2231937
				for MOBI-SCREEN series	32 mm	Upper deck	Screen section, large	7 mm	4 pc.	M20001498
			QM-GRADE 35 rectangular mesh	for MOBI-SCREEN series	35 mm	Lower deck	Screen section, large	8 mm	3 pc.	M20001321
				for MOBI-SCREEN series	35 mm	Upper deck	Screen section, large	8 mm	4 pc.	M20001727

WIRE MESH										
Series code	Serial code	Series range	Part	Version	Clear mesh size	Deck	Position	Wire diameter	Requirement	Part no.
MS 15 Z	K047	1 - 9999	QM-GRADE 40 rectangular mesh	for MOBI-SCREEN series	40 mm	Lower deck	Screen section, large	8 mm	3 pc.	M20001449
				for MOBI-SCREEN series	40 mm	Upper deck	Screen section, large	8 mm	4 pc.	M20000625
			QM-GRADE 45 rectangular mesh	for MOBI-SCREEN series	45 mm	Upper deck	Screen section, large	8 mm	4 pc.	M20000642
			QM-GRADE 50 rectangular mesh	for MOBI-SCREEN series	50 mm	Upper deck	Screen section, large	10 mm	4 pc.	M20000686
				for MOBI-SCREEN series	50 mm	Lower deck	Screen section, large	10 mm	3 pc.	M20001760
			QM-GRADE 55 rectangular mesh	for MOBI-SCREEN series	55 mm	Lower deck	Screen section, large	10 mm	3 pc.	M20001719
				for MOBI-SCREEN series	55 mm	Upper deck	Screen section, large	10 mm	4 pc.	M20000627
			QM-GRADE 60 rectangular mesh	for MOBI-SCREEN series	60 mm	Upper deck	Screen section, large	10 mm	4 pc.	M20001065
				for MOBI-SCREEN series	60 mm	Lower deck	Screen section, large	10 mm	3 pc.	2246161
			QM-GRADE 65 rectangular mesh	for MOBI-SCREEN series	65 mm	Upper deck	Screen section, large	10 mm	4 pc.	M20000688
				for MOBI-SCREEN series	65 mm	Lower deck	Screen section, large	10 mm	3 pc.	M20001720
			QM-GRADE 7 rectangular mesh	for MOBI-SCREEN series	7 mm	Lower deck	Screen section, large	3 mm	3 pc.	2212560

WIRE MESH										
Series code	Serial code	Series range	Part	Version	Clear mesh size	Deck	Position	Wire diameter	Requirement	Part no.
MS 15 Z	K047	1 - 9999	QM-GRADE 70 rectangular mesh	for MOBISCREEN series	70 mm	Upper deck	Screen section, large	10 mm	4 pc.	M20001400
				for MOBISCREEN series	70 mm	Lower deck	Screen section, large	10 mm	3 pc.	2292450
			QM-GRADE 8 rectangular mesh	for MOBISCREEN series	8 mm	Lower deck	Screen section, large	3.2 mm	3 pc.	M10025548
				for MOBISCREEN series	8 mm	Upper deck	Screen section, large	3 mm	4 pc.	M10022614
			QM-GRADE 80 rectangular mesh	for MOBISCREEN series	80 mm	Upper deck	Screen section, large	10 mm	4 pc.	2218851
MSS 802 EVO	K102	10 - 9999	QM-GRADE 10 rectangular mesh	for MOBISCREEN series	10 mm	Upper deck		4 mm	4 pc.	2428276
			QM-GRADE 100 rectangular mesh	for MOBISCREEN series	100 mm	Upper deck		12 mm	4 pc.	2447154
			QM-GRADE 11 rectangular mesh	for MOBISCREEN series	11 mm	Upper deck		4 mm	4 pc.	2447085
			QM-GRADE 12 rectangular mesh	for MOBISCREEN series	12 mm	Upper deck		4 mm	4 pc.	2354096

WIRE MESH										
Series code	Serial code	Series range	Part	Version	Clear mesh size	Deck	Position	Wire diameter	Requirement	Part no.
MSS 802 EVO	K102	10 - 9999	QM-GRADE 15 rectangular mesh	for MOBISCREEN series	15 mm	Upper deck		5 mm	4 pc.	2447094
				for MOBISCREEN series	15 mm	Lower deck		4 mm	3 pc.	3072845
			QM-GRADE 16 rectangular mesh	for MOBISCREEN series	16 mm	Upper deck		5 mm	4 pc.	2447110
			QM-GRADE 18 rectangular mesh	for MOBISCREEN series	18 mm	Upper deck		5 mm	4 pc.	2447118
			QM-GRADE 20 rectangular mesh	for MOBISCREEN series	20 mm	Lower deck		5 mm	3 pc.	2722951
				for MOBISCREEN series	20 mm	Upper deck		5 mm	4 pc.	2354095
			QM-GRADE 22 rectangular mesh	for MOBISCREEN series	22 mm	Lower deck		5 mm	3 pc.	3078684
			QM-GRADE 25 rectangular mesh	for MOBISCREEN series	25 mm	Lower deck		5 mm	3 pc.	2662874
				for MOBISCREEN series	25 mm	Upper deck		6.3 mm	4 pc.	2428275
			QM-GRADE 3 rectangular mesh	for MOBISCREEN series	3 mm	Lower deck		1.6 mm	3 pc.	3068903

WIRE MESH

Series code	Serial code	Series range	Part	Version	Clear mesh size	Deck	Posi-tion	Wire dia-meter	Re-quire-ment	Part no.
MSS 802 EVO	K102	10 - 9999	QM-GRADE 30 rect-angular mesh	for MOBI-SCREEN series	30 mm	Lower deck		6 mm	3 pc.	2662881
				for MOBI-SCREEN series	30 mm	Upper deck		8 mm	4 pc.	2950561
				for MOBI-SCREEN series	30 mm	Upper deck		8 mm	4 pc.	2447130
			QM-GRADE 35 rect-angular mesh	for MOBI-SCREEN series	35 mm	Upper deck		8 mm	4 pc.	2354093
				for MOBI-SCREEN series	35 mm	Lower deck		8 mm	3 pc.	3020387
			QM-GRADE 38 rect-angular mesh	for MOBI-SCREEN series	38 mm	Lower deck		8 mm	3 pc.	2662873
				for MOBI-SCREEN series	38 mm	Upper deck		8 mm	4 pc.	2639254
			QM-GRADE 40 rect-angular mesh	for MOBI-SCREEN series	40 mm	Upper deck		8 mm	4 pc.	2447134
				for MOBI-SCREEN series	40 mm	Lower deck		8 mm	3 pc.	2662872
			QM-GRADE 45 rect-angular mesh	for MOBI-SCREEN series	45 mm	Upper deck		8 mm	4 pc.	2354091
				for MOBI-SCREEN series	45 mm	Lower deck		8 mm	3 pc.	2662883
			QM-GRADE 50 rect-angular mesh	for MOBI-SCREEN series	50 mm	Upper deck		8 mm	4 pc.	2447141
				for MOBI-SCREEN series	50 mm	Lower deck		8 mm	3 pc.	3008231

WIRE MESH										
Series code	Serial code	Series range	Part	Version	Clear mesh size	Deck	Posi-tion	Wire dia-meter	Re-quire-ment	Part no.
MSS 802 EVO	K102	10 - 9999	QM-GRADE 55 rect-angular mesh	for MOBI-SCREEN series	55 mm	Upper deck		10 mm	4 pc.	2447143
			QM-GRADE 6 rect-angular mesh	for MOBI-SCREEN series	6 mm	Upper deck		2.5 mm	4 pc.	2594308
			QM-GRADE 60 rect-angular mesh	for MOBI-SCREEN series	60 mm	Upper deck		10 mm	4 pc.	2447147
			QM-GRADE 65 rect-angular mesh	for MOBI-SCREEN series	65 mm	Upper deck		10 mm	4 pc.	2447148
			QM-GRADE 7 rect-angular mesh	for MOBI-SCREEN series	7 mm	Upper deck		3 mm	4 pc.	2447170
			QM-GRADE 70 rect-angular mesh	for MOBI-SCREEN series	70 mm	Upper deck		10 mm	4 pc.	2447150
			QM-GRADE 75 rect-angular mesh	for MOBI-SCREEN series	75 mm	Upper deck		10 mm	4 pc.	2354086
			QM-GRADE 8 rect-angular mesh	for MOBI-SCREEN series	8 mm	Upper deck		3 mm	4 pc.	2447171

WIRE MESH										
Series code	Serial code	Series range	Part	Version	Clear mesh size	Deck	Posi-tion	Wire dia-meter	Re-quire-ment	Part no.
MSS 802 EVO	K102	10 - 9999	QM-GRADE 9 rect-angular mesh	for MOBI-SCREEN series	9 mm	Upper deck		3 mm	4 pc.	2735923
			QM-GRADE 90 rect-angular mesh	for MOBI-SCREEN series	90 mm	Upper deck		12 mm	4 pc.	2447153
MC 110 EVO	K117	1 - 9999	Dummy rubber	for pre-screening units		Lower deck			1 pc.	WX3225247
			QM-GRADE 10 rect-angular mesh	for pre-screening units	10 mm	Lower deck		4 mm	1 pc.	2298547
			QM-GRADE 12 rect-angular mesh	for pre-screening units	12 mm	Lower deck		4 mm	1 pc.	2298549
			QM-GRADE 15 rect-angular mesh	for pre-screening units	15 mm	Lower deck		4 mm	1 pc.	2298550
			QM-GRADE 18 rect-angular mesh	for pre-screening units	18 mm	Lower deck		4 mm	1 pc.	2298551
			QM-GRADE 20 rect-angular mesh	for pre-screening units	20 mm	Lower deck		5 mm	1 pc.	2298552
			QM-GRADE 22 rect-angular mesh	for pre-screening units	22 mm	Lower deck		6 mm	1 pc.	2617143

WIRE MESH										
Series code	Serial code	Series range	Part	Version	Clear mesh size	Deck	Posi-tion	Wire dia-meter	Re-quire-ment	Part no.
MC 110 EVO	K117	1 - 9999	QM-GRADE 25 rect-angular mesh	for pre-screening units	25 mm	Lower deck		6 mm	1 pc.	2298554
			QM-GRADE 30 rect-angular mesh	for pre-screening units	30 mm	Lower deck		8 mm	1 pc.	2298555
			QM-GRADE 35 rect-angular mesh	for pre-screening units	35 mm	Lower deck		8 mm	1 pc.	2298556
			QM-GRADE 40 rect-angular mesh	for pre-screening units	40 mm	Lower deck		8 mm	1 pc.	2298557
			QM-GRADE 45 rect-angular mesh	for pre-screening units	45 mm	Lower deck		8 mm	1 pc.	2298558
			QM-GRADE 50 rect-angular mesh	for pre-screening units	50 mm	Lower deck		10 mm	1 pc.	2298559
			QM-GRADE 55 rect-angular mesh	for pre-screening units	55 mm	Lower deck		10 mm	1 pc.	2298560
			QM-GRADE 60 rect-angular mesh	for pre-screening units	60 mm	Lower deck		10 mm	1 pc.	2607436

WIRE MESH										
Series code	Serial code	Series range	Part	Version	Clear mesh size	Deck	Position	Wire diameter	Requirement	Part no.
MR 100 NEO	K136		Rectangular mesh QM-GRADE 32	for secondary screening units	32 mm	Lower deck - NSE			2 pc.	WX3193405
			Rectangular mesh QM-GRADE 10	for secondary screening units	10 mm	Lower deck - NSE			2 pc.	WX3193398
			Rectangular mesh QM-GRADE 12	for secondary screening units	12 mm	Lower deck - NSE			2 pc.	WX3193400
			Rectangular mesh QM-GRADE 13	for secondary screening units	13 mm	Lower deck - NSE			2 pc.	WX3193401
			Rectangular mesh QM-GRADE 15	for secondary screening units	15 mm	Lower deck - NSE			2 pc.	WX3193402
			Rectangular mesh QM-GRADE 18	for secondary screening units	18 mm	Lower deck - NSE			2 pc.	WX3193403
		1 - 9999	Rectangular mesh QM-GRADE 20	for secondary screening units	20 mm	Lower deck - NSE			2 pc.	3079097
			Rectangular mesh QM-GRADE 25	for secondary screening units	25 mm	Lower deck - NSE			2 pc.	3079103

WIRE MESH										
Series code	Serial code	Series range	Part	Version	Clear mesh size	Deck	Position	Wire diameter	Requirement	Part no.
MR 100 NEO	K136		Rectangular mesh QM-GRADE 30	for secondary screening units	30 mm	Lower deck - NSE			2 pc.	WX3193404
			Rectangular mesh QM-GRADE 35	for secondary screening units	35 mm	Lower deck - NSE			2 pc.	WX3193406
			Rectangular mesh QM-GRADE 40	for secondary screening units	40 mm	Lower deck - NSE			2 pc.	3079106
			Rectangular mesh QM-GRADE 50	for secondary screening units	50 mm	Lower deck - NSE			2 pc.	3111789
			Rectangular mesh QM-GRADE 55	for secondary screening units	55 mm	Lower deck - NSE			2 pc.	3079111
			Rectangular mesh QM-GRADE 65	for secondary screening units	65 mm	Lower deck - NSE			2 pc.	3079114
			Rectangular mesh QM-GRADE 70	for secondary screening units	70 mm	Lower deck - NSE			2 pc.	WX3193407
MR 100 NEOe	K138		Rectangular mesh QM-GRADE 32	for secondary screening units	32 mm	Lower deck - NSE			2 pc.	WX3193405

WIRE MESH										
Series code	Serial code	Series range	Part	Version	Clear mesh size	Deck	Posi-tion	Wire dia-meter	Re-quire-ment	Part no.
MR 100 NEOe	K138		Rectan-gular mesh QM-GRADE 10	for second-ary screen-ing units	10 mm	Lower deck - NSE			2 pc.	WX3193398
			Rectan-gular mesh QM-GRADE 12	for second-ary screen-ing units	12 mm	Lower deck - NSE			2 pc.	WX3193400
			Rectan-gular mesh QM-GRADE 13	for second-ary screen-ing units	13 mm	Lower deck - NSE			2 pc.	WX3193401
			Rectan-gular mesh QM-GRADE 15	for second-ary screen-ing units	15 mm	Lower deck - NSE			2 pc.	WX3193402
			Rectan-gular mesh QM-GRADE 18	for second-ary screen-ing units	18 mm	Lower deck - NSE			2 pc.	WX3193403
			Rectan-gular mesh QM-GRADE 20	for second-ary screen-ing units	20 mm	Lower deck - NSE			2 pc.	3079097
			Rectan-gular mesh QM-GRADE 25	for second-ary screen-ing units	25 mm	Lower deck - NSE			2 pc.	3079103
			Rectan-gular mesh QM-GRADE 30	for second-ary screen-ing units	30 mm	Lower deck - NSE			2 pc.	WX3193404

WIRE MESH										
Series code	Serial code	Series range	Part	Version	Clear mesh size	Deck	Position	Wire diameter	Requirement	Part no.
MR 100 NEOe	K138		Rectangular mesh QM-GRADE 35	for secondary screening units	35 mm	Lower deck - NSE			2 pc.	WX3193406
			Rectangular mesh QM-GRADE 40	for secondary screening units	40 mm	Lower deck - NSE			2 pc.	3079106
			Rectangular mesh QM-GRADE 50	for secondary screening units	50 mm	Lower deck - NSE			2 pc.	3111789
			Rectangular mesh QM-GRADE 55	for secondary screening units	55 mm	Lower deck - NSE			2 pc.	3079111
			Rectangular mesh QM-GRADE 65	for secondary screening units	65 mm	Lower deck - NSE			2 pc.	3079114
			Rectangular mesh QM-GRADE 70	for secondary screening units	70 mm	Lower deck - NSE			2 pc.	WX3193407
MR 100 NEO	K135		Rectangular mesh QM-GRADE 32	for secondary screening units	32 mm					WX3193405
			Rectangular mesh QM-GRADE 10	for secondary screening units	10 mm					WX3193398

WIRE MESH										
Series code	Serial code	Series range	Part	Version	Clear mesh size	Deck	Position	Wire diameter	Requirement	Part no.
MR 100 NEO	K135		Rectangular mesh QM-GRADE 12	for secondary screening units	12 mm					WX3193400
			Rectangular mesh QM-GRADE 13	for secondary screening units	13 mm					WX3193401
			Rectangular mesh QM-GRADE 15	for secondary screening units	15 mm					WX3193402
			Rectangular mesh QM-GRADE 20	for secondary screening units	20 mm					3079097
			Rectangular mesh QM-GRADE 25	for secondary screening units	25 mm					3079103
			Rectangular mesh QM-GRADE 30	for secondary screening units	30 mm					WX3193404
			Rectangular mesh QM-GRADE 35	for secondary screening units	35 mm					WX3193406
			Rectangular mesh QM-GRADE 40	for secondary screening units	40 mm					3079106

WIRE MESH										
Series code	Serial code	Series range	Part	Version	Clear mesh size	Deck	Position	Wire diameter	Requirement	Part no.
MR 100 NEO	K135		Rectangular mesh QM-GRADE 55	for secondary screening units	55 mm					3079111
			Rectangular mesh QM-GRADE 65	for secondary screening units	65 mm					3079114
			Rectangular mesh QM-GRADE 70	for secondary screening units	70 mm					WX3193407
MR 100 NEOe	K137		Rectangular mesh QM-GRADE 32	for secondary screening units	32 mm					WX3193405
			Rectangular mesh QM-GRADE 10	for secondary screening units	10 mm					WX3193398
			Rectangular mesh QM-GRADE 12	for secondary screening units	12 mm					WX3193400
			Rectangular mesh QM-GRADE 13	for secondary screening units	13 mm					WX3193401
			Rectangular mesh QM-GRADE 15	for secondary screening units	15 mm					WX3193402

WIRE MESH										
Series code	Serial code	Series range	Part	Version	Clear mesh size	Deck	Position	Wire diameter	Requirement	Part no.
MR 100 NEOe	K137		Rectangular mesh QM-GRADE 20	for secondary screening units	20 mm					3079097
			Rectangular mesh QM-GRADE 25	for secondary screening units	25 mm					3079103
			Rectangular mesh QM-GRADE 30	for secondary screening units	30 mm					WX3193404
			Rectangular mesh QM-GRADE 35	for secondary screening units	35 mm					WX3193406
			Rectangular mesh QM-GRADE 40	for secondary screening units	40 mm					3079106
			Rectangular mesh QM-GRADE 55	for secondary screening units	55 mm					3079111
			Rectangular mesh QM-GRADE 65	for secondary screening units	65 mm					3079114
			Rectangular mesh QM-GRADE 70	for secondary screening units	70 mm					WX3193407

HARP SCREENS

Genuine KLEEMANN harp screens are generally recommended for use with moist, sticky materials that are difficult to screen.

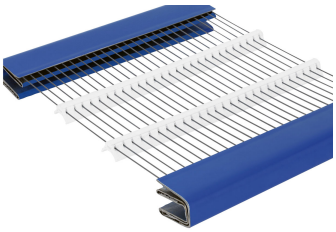

HARP SCREENS										
Series code	Serial code	Series range	Version	Clear mesh size	Mesh length	Deck	Position	Wire diameter	Requirement	Part no.
MR 110 EVO	K018	331 - 9999	G harp screen/piano wire for MOBI-SCREEN series	10 mm		Upper deck		2 mm	2 pc.	3063936
			G harp screen/piano wire for MOBI-SCREEN series	2 mm		Upper deck		2 mm	2 pc.	3063928
			G harp screen/piano wire for MOBI-SCREEN series	4 mm		Upper deck		1 mm	2 pc.	3063930
			G harp screen/piano wire for MOBI-SCREEN series	5 mm		Upper deck		1.4 mm	2 pc.	3063931
			G harp screen/piano wire for MOBI-SCREEN series	6 mm		Upper deck		1.6 mm	2 pc.	3063932
			G harp screen/piano wire for MOBI-SCREEN series	7 mm		Upper deck		1.6 mm	2 pc.	3063933
			G harp screen/piano wire for MOBI-SCREEN series	8 mm		Upper deck		1.6 mm	2 pc.	3063934
			G harp screen/piano wire for MOBI-SCREEN series	9 mm		Upper deck		2 mm	2 pc.	3063935
	K019	201 - 9999	G harp screen/piano wire for MOBI-SCREEN series	10 mm		Upper deck		2 mm	2 pc.	3063936

HARP SCREENS

Series code	Serial code	Series range	Version	Clear mesh size	Mesh length	Deck	Position	Wire diameter	Requirement	Part no.
MR 110 EVO	K019	201 - 9999	G harp screen/piano wire for MOBI-SCREEN series	2 mm		Upper deck		2 mm	2 pc.	3063928
			G harp screen/piano wire for MOBI-SCREEN series	4 mm		Upper deck		2 mm	2 pc.	3063930
			G harp screen/piano wire for MOBI-SCREEN series	5 mm		Upper deck		2 mm	2 pc.	3063931
			G harp screen/piano wire for MOBI-SCREEN series	6 mm		Upper deck		2 mm	2 pc.	3063932
			G harp screen/piano wire for MOBI-SCREEN series	7 mm		Upper deck		2 mm	2 pc.	3063933
			G harp screen/piano wire for MOBI-SCREEN series	8 mm		Upper deck		2 mm	2 pc.	3063934
			G harp screen/piano wire for MOBI-SCREEN series	9 mm		Upper deck		2 mm	2 pc.	3063935
MSS 352 EVO	K067	1 - 9999	G harp screen/piano wire for MOBI-SCREEN series	10 mm		Lower deck	Screen section, large	1.5 mm	1 pc.	2414093
			G harp screen/piano wire for MOBI-SCREEN series	10 mm		Lower deck	Screen section, small	1.5 mm	1 pc.	2414103
			G harp screen/piano wire for MOBI-SCREEN series	12 mm		Lower deck	Screen section, small	1.8 mm	1 pc.	2414104
			G harp screen/piano wire for MOBI-SCREEN series	12 mm		Lower deck	Screen section, large	1.8 mm	1 pc.	2414095
			G harp screen/piano wire for MOBI-SCREEN series	2 mm		Lower deck	Screen section, small	0.7 mm	1 pc.	2414096

HARP SCREENS										
Series code	Serial code	Series range	Version	Clear mesh size	Mesh length	Deck	Position	Wire diameter	Requirement	Part no.
MSS 352 EVO	K067	1 - 9999	G harp screen/piano wire for MOBI-SCREEN series	2 mm		Lower deck	Screen section, large	0.7 mm	1 pc.	2414054
			G harp screen/piano wire for MOBI-SCREEN series	3 mm		Lower deck	Screen section, large	0.8 mm	1 pc.	2414059
			G harp screen/piano wire for MOBI-SCREEN series	3 mm		Lower deck	Screen section, small	0.8 mm	1 pc.	2414097
			G harp screen/piano wire for MOBI-SCREEN series	4 mm		Lower deck	Screen section, large	1 mm	1 pc.	2414060
			G harp screen/piano wire for MOBI-SCREEN series	4 mm		Lower deck	Screen section, small	1 mm	1 pc.	2414098
			G harp screen/piano wire for MOBI-SCREEN series	5 mm		Lower deck	Screen section, small	1 mm	1 pc.	2414099
			G harp screen/piano wire for MOBI-SCREEN series	5 mm		Lower deck	Screen section, large	1 mm	1 pc.	2414063
			G harp screen/piano wire for MOBI-SCREEN series	6 mm		Lower deck	Screen section, small	1.2 mm	1 pc.	2414100
			G harp screen/piano wire for MOBI-SCREEN series	6 mm		Lower deck	Screen section, large	1.2 mm	1 pc.	2414066
			G harp screen/piano wire for MOBI-SCREEN series	7 mm		Lower deck	Screen section, large	1.4 mm	1 pc.	2414067
			G harp screen/piano wire for MOBI-SCREEN series	7 mm		Lower deck	Screen section, small	1.4 mm	1 pc.	2414101
			G harp screen/piano wire for MOBI-SCREEN series	8 mm		Lower deck	Screen section, small	1.5 mm	1 pc.	2414102

HARP SCREENS

Series code	Serial code	Series range	Version	Clear mesh size	Mesh length	Deck	Position	Wire diameter	Requirement	Part no.
MSS 352 EVO	K067	1 - 9999	G harp screen/piano wire for MOBI-SCREEN series	8 mm		Lower deck	Screen section, large	1.5 mm	1 pc.	2414092
			W harp screen/long slot for MOBI-SCREEN series	10 mm	100 mm	Lower deck	Screen section, small	3 mm	1 pc.	2355275
			W harp screen/long slot for MOBI-SCREEN series	10 mm	100 mm	Lower deck	Screen section, large	3 mm	1 pc.	2355274
			W harp screen/long slot for MOBI-SCREEN series	10 mm	150 mm	Lower deck	Screen section, large	2.5 mm	1 pc.	2658789
			W harp screen/long slot for MOBI-SCREEN series	10 mm	150 mm	Lower deck	Screen section, small	2.5 mm	1 pc.	2658792
			W harp screen/long slot for MOBI-SCREEN series	12 mm	100 mm	Lower deck	Screen section, large	3 mm	1 pc.	2564795
			W harp screen/long slot for MOBI-SCREEN series	12 mm	100 mm	Lower deck	Screen section, small	3 mm	1 pc.	2564796
			W harp screen/long slot for MOBI-SCREEN series	12 mm	150 mm	Lower deck	Screen section, small	3 mm	1 pc.	2666315
			W harp screen/long slot for MOBI-SCREEN series	12 mm	150 mm	Lower deck	Screen section, large	3 mm	1 pc.	2666314
			W harp screen/long slot for MOBI-SCREEN series	15 mm	100 mm	Lower deck	Screen section, large	4 mm	1 pc.	2306064
			W harp screen/long slot for MOBI-SCREEN series	15 mm	100 mm	Lower deck	Screen section, small	4 mm	1 pc.	2306066
			W harp screen/long slot for MOBI-SCREEN series	8 mm	100 mm	Lower deck	Screen section, small	3 mm	1 pc.	2570587

HARP SCREENS										
Series code	Serial code	Series range	Version	Clear mesh size	Mesh length	Deck	Position	Wire diameter	Requirement	Part no.
MSS 352 EVO	K067	1 - 9999	W harp screen/long slot for MOBI-SCREEN series	8 mm	100 mm	Lower deck	Screen section, large	3 mm	1 pc.	2551120
MSS 502 EVO	K066	1 - 9999	G harp screen/piano wire for MOBI-SCREEN series	10 mm		Lower deck	Screen section, large	1.5 mm	2 pc.	2414112
			G harp screen/piano wire for MOBI-SCREEN series	12 mm		Lower deck	Screen section, large	1.8 mm	2 pc.	2414113
			G harp screen/piano wire for MOBI-SCREEN series	2 mm		Lower deck	Screen section, large	0.7 mm	2 pc.	2414105
			G harp screen/piano wire for MOBI-SCREEN series	3 mm		Lower deck	Screen section, large	0.8 mm	2 pc.	2414106
			G harp screen/piano wire for MOBI-SCREEN series	4 mm		Lower deck	Screen section, large	1 mm	2 pc.	2414107
			G harp screen/piano wire for MOBI-SCREEN series	5 mm		Lower deck	Screen section, large	1 mm	2 pc.	2414108
			G harp screen/piano wire for MOBI-SCREEN series	6 mm		Lower deck	Screen section, large	1.2 mm	2 pc.	2414109
			G harp screen/piano wire for MOBI-SCREEN series	8 mm		Lower deck	Screen section, large	1.5 mm	2 pc.	WX2414111
			W harp screen/long slot for MOBI-SCREEN series	10 mm	150 mm	Lower deck	Screen section, large	2.5 mm	2 pc.	2235533
			W harp screen/long slot for MOBI-SCREEN series	12 mm	150 mm	Lower deck	Screen section, large	3 mm	2 pc.	2375349
			W harp screen/long slot for MOBI-SCREEN series	5 mm	150 mm	Lower deck	Screen section, large	1.8 mm	2 pc.	2373999

HARP SCREENS

Series code	Serial code	Series range	Version	Clear mesh size	Mesh length	Deck	Position	Wire diameter	Requirement	Part no.
MSS 502 EVO	K066	1 - 9999	W harp screen/long slot for MOBI-SCREEN series	6 mm	100 mm	Lower deck	Screen section, large	3 mm	2 pc.	2248956
			W harp screen/long slot for MOBI-SCREEN series	8 mm	150 mm	Lower deck	Screen section, large	3 mm	2 pc.	2264214
MS 14 Z	K068	1 - 9999	G harp screen/piano wire for MOBI-SCREEN series	10 mm		Lower deck	Screen section, large	1.5 mm	1 pc.	2414126
			G harp screen/piano wire for MOBI-SCREEN series	12 mm		Lower deck	Screen section, large	1.8 mm	1 pc.	2414127
			G harp screen/piano wire for MOBI-SCREEN series	2 mm		Lower deck	Screen section, large	0.7 mm	1 pc.	2414116
			G harp screen/piano wire for MOBI-SCREEN series	3 mm		Lower deck	Screen section, large	0.8 mm	1 pc.	2414117
			G harp screen/piano wire for MOBI-SCREEN series	4 mm		Lower deck	Screen section, large	1 mm	1 pc.	2414118
			G harp screen/piano wire for MOBI-SCREEN series	5 mm		Lower deck	Screen section, large	1 mm	1 pc.	2414119
			G harp screen/piano wire for MOBI-SCREEN series	6 mm		Lower deck	Screen section, large	1.2 mm	1 pc.	2414121
			G harp screen/piano wire for MOBI-SCREEN series	7 mm		Lower deck	Screen section, large	1.4 mm	1 pc.	2414124
			G harp screen/piano wire for MOBI-SCREEN series	8 mm		Lower deck	Screen section, large	1.5 mm	1 pc.	2414125
MS 16 Z	K048	1 - 9999	G harp screen/piano wire for MOBI-SCREEN series	10 mm		Lower deck	Screen section, large	1.5 mm	2 pc.	2414154

HARP SCREENS

Series code	Serial code	Series range	Version	Clear mesh size	Mesh length	Deck	Position	Wire diameter	Requirement	Part no.
MS 16 Z	K048	1 - 9999	G harp screen/piano wire for MOBI-SCREEN series	12 mm		Lower deck	Screen section, large	1.8 mm	2 pc.	2414155
			G harp screen/piano wire for MOBI-SCREEN series	2 mm		Lower deck	Screen section, large	0.7 mm	2 pc.	2414148
			G harp screen/piano wire for MOBI-SCREEN series	3 mm		Lower deck	Screen section, large	0.8 mm	2 pc.	2401395
			G harp screen/piano wire for MOBI-SCREEN series	4 mm		Lower deck	Screen section, large	1 mm	2 pc.	2414149
			G harp screen/piano wire for MOBI-SCREEN series	5 mm		Lower deck	Screen section, large	1 mm	2 pc.	2414150
			G harp screen/piano wire for MOBI-SCREEN series	6 mm		Lower deck	Screen section, large	1.2 mm	2 pc.	M20000644
			G harp screen/piano wire for MOBI-SCREEN series	7 mm		Lower deck	Screen section, large	1.4 mm	2 pc.	2414152
			G harp screen/piano wire for MOBI-SCREEN series	8 mm		Lower deck	Screen section, large	1.5 mm	2 pc.	2414153
			W harp screen/long slot for MOBI-SCREEN series	10 mm	100 mm	Lower deck	Screen section, large	3 mm	2 pc.	M20001779
			W harp screen/long slot for MOBI-SCREEN series	14 mm	100 mm	Lower deck	Screen section, large	3 mm	2 pc.	2374863
			W harp screen/long slot for MOBI-SCREEN series	15 mm	150 mm	Lower deck	Screen section, large	3 mm	2 pc.	2454473
			W harp screen/long slot for MOBI-SCREEN series	4 mm	100 mm	Lower deck	Screen section, large	2 mm	2 pc.	2580873

HARP SCREENS

Series code	Serial code	Series range	Version	Clear mesh size	Mesh length	Deck	Position	Wire diameter	Requirement	Part no.
MS 16 Z	K048	1 - 9999	W harp screen/long slot for MOBI-SCREEN series	5 mm	150 mm	Lower deck	Screen section, large	2 mm	2 pc.	2269616
			W harp screen/long slot for MOBI-SCREEN series	6 mm	150 mm	Lower deck	Screen section, large	2 mm	2 pc.	2308222
			W harp screen/long slot for MOBI-SCREEN series	7 mm	100 mm	Lower deck	Screen section, large	2 mm	2 pc.	2331280
			W harp screen/long slot for MOBI-SCREEN series	8 mm	150 mm	Lower deck	Screen section, large	3 mm	2 pc.	M20001072
MS 16 D	K049	1 - 9999	G harp screen/piano wire for MOBI-SCREEN series	10 mm		Lower deck	Screen section, large	1.5 mm	2 pc.	2414154
			G harp screen/piano wire for MOBI-SCREEN series	12 mm		Lower deck	Screen section, large	1.8 mm	2 pc.	2414155
			G harp screen/piano wire for MOBI-SCREEN series	2 mm		Lower deck	Screen section, large	0.7 mm	2 pc.	2414148
			G harp screen/piano wire for MOBI-SCREEN series	3 mm		Lower deck	Screen section, large	0.8 mm	2 pc.	2401395
			G harp screen/piano wire for MOBI-SCREEN series	4 mm		Lower deck	Screen section, large	1 mm	2 pc.	2414149
			G harp screen/piano wire for MOBI-SCREEN series	5 mm		Lower deck	Screen section, large	1 mm	2 pc.	2414150
			G harp screen/piano wire for MOBI-SCREEN series	6 mm		Lower deck	Screen section, large	1.2 mm	2 pc.	M20000644
			G harp screen/piano wire for MOBI-SCREEN series	7 mm		Lower deck	Screen section, large	1.4 mm	2 pc.	2414152

HARP SCREENS										
Series code	Serial code	Series range	Version	Clear mesh size	Mesh length	Deck	Position	Wire diameter	Requirement	Part no.
MS 16 D	K049	1 - 9999	G harp screen/piano wire for MOBI-SCREEN series	8 mm		Lower deck	Screen section, large	1.5 mm	2 pc.	2414153
			W harp screen/long slot for MOBI-SCREEN series	10 mm	100 mm	Lower deck	Screen section, large	3 mm	2 pc.	M20001779
			W harp screen/long slot for MOBI-SCREEN series	14 mm	100 mm	Lower deck	Screen section, large	3 mm	2 pc.	2374863
			W harp screen/long slot for MOBI-SCREEN series	15 mm	150 mm	Lower deck	Screen section, large	3 mm	2 pc.	2454473
			W harp screen/long slot for MOBI-SCREEN series	4 mm	100 mm	Lower deck	Screen section, large	2 mm	2 pc.	2580873
			W harp screen/long slot for MOBI-SCREEN series	5 mm	150 mm	Lower deck	Screen section, large	2 mm	2 pc.	2269616
			W harp screen/long slot for MOBI-SCREEN series	6 mm	150 mm	Lower deck	Screen section, large	2 mm	2 pc.	2308222
			W harp screen/long slot for MOBI-SCREEN series	7 mm	100 mm	Lower deck	Screen section, large	2 mm	2 pc.	2331280
			W harp screen/long slot for MOBI-SCREEN series	8 mm	150 mm	Lower deck	Screen section, large	3 mm	2 pc.	M20001072
MS 19 Z	K054	1 - 9999	G harp screen/piano wire for MOBI-SCREEN series	10 mm		Lower deck	Screen section, large	1.5 mm	3 pc.	2414154
			G harp screen/piano wire for MOBI-SCREEN series	12 mm		Lower deck	Screen section, large	1.8 mm	3 pc.	2414155
			G harp screen/piano wire for MOBI-SCREEN series	2 mm		Lower deck	Screen section, large	0.7 mm	3 pc.	2414148

HARP SCREENS

Series code	Serial code	Series range	Version	Clear mesh size	Mesh length	Deck	Position	Wire diameter	Requirement	Part no.
MS 19 Z	K054	1 - 9999	G harp screen/piano wire for MOBI-SCREEN series	3 mm		Lower deck	Screen section, large	0.8 mm	3 pc.	2401395
			G harp screen/piano wire for MOBI-SCREEN series	4 mm		Lower deck	Screen section, large	1 mm	3 pc.	2414149
			G harp screen/piano wire for MOBI-SCREEN series	5 mm		Lower deck	Screen section, large	1 mm	3 pc.	2414150
			G harp screen/piano wire for MOBI-SCREEN series	6 mm		Lower deck	Screen section, large	1.2 mm	3 pc.	M20000644
			G harp screen/piano wire for MOBI-SCREEN series	7 mm		Lower deck	Screen section, large	1.4 mm	3 pc.	2414152
			G harp screen/piano wire for MOBI-SCREEN series	8 mm		Lower deck	Screen section, large	1.5 mm	3 pc.	2414153
			W harp screen/long slot for MOBI-SCREEN series	10 mm	100 mm	Lower deck	Screen section, large	3 mm	3 pc.	M20001779
			W harp screen/long slot for MOBI-SCREEN series	14 mm	100 mm	Lower deck	Screen section, large	3 mm	3 pc.	2374863
			W harp screen/long slot for MOBI-SCREEN series	15 mm	150 mm	Lower deck	Screen section, large	3 mm	3 pc.	2454473
			W harp screen/long slot for MOBI-SCREEN series	4 mm	100 mm	Lower deck	Screen section, large	2 mm	3 pc.	2580873
			W harp screen/long slot for MOBI-SCREEN series	5 mm	150 mm	Lower deck	Screen section, large	2 mm	3 pc.	2269616
			W harp screen/long slot for MOBI-SCREEN series	6 mm	150 mm	Lower deck	Screen section, large	2 mm	3 pc.	2308222

HARP SCREENS

Series code	Serial code	Series range	Version	Clear mesh size	Mesh length	Deck	Position	Wire diameter	Requirement	Part no.
MS 19 Z	K054	1 - 9999	W harp screen/long slot for MOBI-SCREEN series	7 mm	100 mm	Lower deck	Screen section, large	2 mm	3 pc.	2331280
			W harp screen/long slot for MOBI-SCREEN series	8 mm	150 mm	Lower deck	Screen section, large	3 mm	3 pc.	M20001072
MS 19 D	K055	1 - 9999	G harp screen/piano wire for MOBI-SCREEN series	10 mm		Lower deck	Screen section, large	1.5 mm	3 pc.	2414154
			G harp screen/piano wire for MOBI-SCREEN series	12 mm		Lower deck	Screen section, large	1.8 mm	3 pc.	2414155
			G harp screen/piano wire for MOBI-SCREEN series	2 mm		Lower deck	Screen section, large	0.7 mm	3 pc.	2414148
			G harp screen/piano wire for MOBI-SCREEN series	3 mm		Lower deck	Screen section, large	0.8 mm	3 pc.	2401395
			G harp screen/piano wire for MOBI-SCREEN series	4 mm		Lower deck	Screen section, large	1 mm	3 pc.	2414149
			G harp screen/piano wire for MOBI-SCREEN series	5 mm		Lower deck	Screen section, large	1 mm	3 pc.	2414150
			G harp screen/piano wire for MOBI-SCREEN series	6 mm		Lower deck	Screen section, large	1.2 mm	3 pc.	M20000644
			G harp screen/piano wire for MOBI-SCREEN series	7 mm		Lower deck	Screen section, large	1.4 mm	3 pc.	2414152
			G harp screen/piano wire for MOBI-SCREEN series	8 mm		Lower deck	Screen section, large	1.5 mm	3 pc.	2414153
			W harp screen/long slot for MOBI-SCREEN series	10 mm	100 mm	Lower deck	Screen section, large	3 mm	3 pc.	M20001779

HARP SCREENS

Series code	Serial code	Series range	Version	Clear mesh size	Mesh length	Deck	Position	Wire diameter	Requirement	Part no.
MS 19 D	K055	1 - 9999	W harp screen/long slot for MOBI-SCREEN series	14 mm	100 mm	Lower deck	Screen section, large	3 mm	3 pc.	2374863
			W harp screen/long slot for MOBI-SCREEN series	15 mm	150 mm	Lower deck	Screen section, large	3 mm	3 pc.	2454473
			W harp screen/long slot for MOBI-SCREEN series	4 mm	100 mm	Lower deck	Screen section, large	2 mm	3 pc.	2580873
			W harp screen/long slot for MOBI-SCREEN series	5 mm	150 mm	Lower deck	Screen section, large	2 mm	3 pc.	2269616
			W harp screen/long slot for MOBI-SCREEN series	6 mm	150 mm	Lower deck	Screen section, large	2 mm	3 pc.	2308222
			W harp screen/long slot for MOBI-SCREEN series	7 mm	100 mm	Lower deck	Screen section, large	2 mm	3 pc.	2331280
			W harp screen/long slot for MOBI-SCREEN series	8 mm	150 mm	Lower deck	Screen section, large	3 mm	3 pc.	M20001072
MSC 702 EVO	K083	1 - 9999	G harp screen/piano wire for MOBI-SCREEN series	2 mm		Lower deck	Screen section, small	1 mm	1 pc.	2354104
			G harp screen/piano wire for MOBI-SCREEN series	2 mm		Lower deck	Screen section, large	1 mm	1 pc.	2453837
			G harp screen/piano wire for MOBI-SCREEN series	3 mm		Lower deck	Screen section, large	1 mm	1 pc.	2453840
			G harp screen/piano wire for MOBI-SCREEN series	3 mm		Lower deck	Screen section, small	1 mm	1 pc.	2447447
			G harp screen/piano wire for MOBI-SCREEN series	4 mm		Lower deck	Screen section, small	1.2 mm	1 pc.	2447459

HARP SCREENS										
Series code	Serial code	Series range	Version	Clear mesh size	Mesh length	Deck	Position	Wire diameter	Requirement	Part no.
MSC 702 EVO	K083	1 - 9999	G harp screen/piano wire for MOBI-SCREEN series	4 mm		Lower deck	Screen section, large	1.2 mm	1 pc.	2448606
			G harp screen/piano wire for MOBI-SCREEN series	5 mm		Lower deck	Screen section, small	1.2 mm	1 pc.	2354103
			G harp screen/piano wire for MOBI-SCREEN series	5 mm		Lower deck	Screen section, large	1.2 mm	1 pc.	2453879
			G harp screen/piano wire for MOBI-SCREEN series	6 mm		Lower deck	Screen section, small	1.6 mm	1 pc.	2428273
			G harp screen/piano wire for MOBI-SCREEN series	6 mm		Lower deck	Screen section, large	1.6 mm	1 pc.	2447936
			G harp screen/piano wire for MOBI-SCREEN series	8 mm		Lower deck	Screen section, small	2 mm	1 pc.	2551178
			G harp screen/piano wire for MOBI-SCREEN series	8 mm		Lower deck	Screen section, large	2 mm	1 pc.	2551179
			W harp screen/long slot for MOBI-SCREEN series	10 mm	150 mm	Lower deck	Screen section, large	2.5 mm	1 pc.	2673669
			W harp screen/long slot for MOBI-SCREEN series	10 mm	150 mm	Lower deck	Screen section, small	2.5 mm	1 pc.	2673601
			W harp screen/long slot for MOBI-SCREEN series	6 mm	150 mm	Lower deck	Screen section, large	2 mm	1 pc.	2679965
			W harp screen/long slot for MOBI-SCREEN series	6 mm	150 mm	Lower deck	Screen section, small	2 mm	1 pc.	2679963
			W harp screen/long slot for MOBI-SCREEN series	8 mm	150 mm	Lower deck	Screen section, small	3 mm	1 pc.	2679964

HARP SCREENS

Series code	Serial code	Series range	Version	Clear mesh size	Mesh length	Deck	Position	Wire diameter	Requirement	Part no.
MSC 702 EVO	K083	1 - 9999	W harp screen/long slot for MOBISCREEN series	8 mm	150 mm	Lower deck	Screen section, large	3 mm	1 pc.	2679966
		10 - 9999	S-harp/piano wire for MOBISCREEN series	10 mm		Lower deck	Screen section, small; Screen section, large	10 mm	1 pc.	2634386
			S-harp/piano wire for MOBISCREEN series	6 mm		Lower deck	Screen section, small	6 mm; 2.5 mm	1 pc.	2731135
			S-harp/piano wire for MOBISCREEN series	6 mm		Lower deck	Screen section, large	6 mm; 2.5 mm	1 pc.	2731136
			S-harp/piano wire for MOBISCREEN series	8 mm		Lower deck	Screen section, large	8 mm; 2.5 mm	1 pc.	2731138
			G harp screen/piano wire for MOBISCREEN series	8 mm		Lower deck	Screen section, small	8 mm; 2.5 mm	1 pc.	2731137
MSC 702i EVO	K103	1 - 9999	G harp screen/piano wire for MOBISCREEN series	2 mm		Lower deck	Screen section, small	1 mm	1 pc.	2354104
			G harp screen/piano wire for MOBISCREEN series	2 mm		Lower deck	Screen section, large	1 mm	1 pc.	2453837
			G harp screen/piano wire for MOBISCREEN series	3 mm		Lower deck	Screen section, large	1 mm	1 pc.	2453840
			G harp screen/piano wire for MOBISCREEN series	3 mm		Lower deck	Screen section, small	1 mm	1 pc.	2447447
			G harp screen/piano wire for MOBISCREEN series	4 mm		Lower deck	Screen section, small	1.2 mm	1 pc.	2447459

HARP SCREENS										
Series code	Serial code	Series range	Version	Clear mesh size	Mesh length	Deck	Position	Wire diameter	Requirement	Part no.
MSC 702i EVO	K103	1 - 9999	G harp screen/piano wire for MOBI-SCREEN series	4 mm		Lower deck	Screen section, large	1.2 mm	1 pc.	2448606
			G harp screen/piano wire for MOBI-SCREEN series	5 mm		Lower deck	Screen section, small	1.2 mm	1 pc.	2354103
			G harp screen/piano wire for MOBI-SCREEN series	5 mm		Lower deck	Screen section, large	1.2 mm	1 pc.	2453879
			G harp screen/piano wire for MOBI-SCREEN series	6 mm		Lower deck	Screen section, small	1.6 mm	1 pc.	2428273
			G harp screen/piano wire for MOBI-SCREEN series	6 mm		Lower deck	Screen section, large	1.6 mm	1 pc.	2447936
			G harp screen/piano wire for MOBI-SCREEN series	8 mm		Lower deck	Screen section, small	2 mm	1 pc.	2551178
			G harp screen/piano wire for MOBI-SCREEN series	8 mm		Lower deck	Screen section, large	2 mm	1 pc.	2551179
			W harp screen/long slot for MOBI-SCREEN series	10 mm	150 mm	Lower deck	Screen section, large	2.5 mm	1 pc.	2673669
			W harp screen/long slot for MOBI-SCREEN series	10 mm	150 mm	Lower deck	Screen section, small	2.5 mm	1 pc.	2673601
			W harp screen/long slot for MOBI-SCREEN series	6 mm	150 mm	Lower deck	Screen section, large	2 mm	1 pc.	2679965
			W harp screen/long slot for MOBI-SCREEN series	6 mm	150 mm	Lower deck	Screen section, small	2 mm	1 pc.	2679963
			W harp screen/long slot for MOBI-SCREEN series	8 mm	150 mm	Lower deck	Screen section, small	3 mm	1 pc.	2679964

HARP SCREENS

Series code	Serial code	Series range	Version	Clear mesh size	Mesh length	Deck	Position	Wire diameter	Requirement	Part no.
MSC 702i EVO	K103	1 - 9999	W harp screen/long slot for MOBISCREEN series	8 mm	150 mm	Lower deck	Screen section, large	3 mm	1 pc.	2679966
		10 - 9999	S-harp/piano wire for MOBISCREEN series	10 mm		Lower deck	Screen section, small; Screen section, large	10 mm; 2.5 mm	1 pc.	2634386
			S-harp/piano wire for MOBISCREEN series	6 mm		Lower deck	Screen section, small	6 mm; 2.5 mm	1 pc.	2731135
			S-harp/piano wire for MOBISCREEN series	6 mm		Lower deck	Screen section, large	6 mm; 2.5 mm	1 pc.	2731136
			S-harp/piano wire for MOBISCREEN series	8 mm		Lower deck	Screen section, large	8 mm; 2.5 mm	1 pc.	2731138
			G harp screen/piano wire for MOBISCREEN series	8 mm		Lower deck	Screen section, small	8 mm; 2.5 mm	1 pc.	2731137
MSC 703 EVO	K084	1 - 9999	G harp screen/piano wire for MOBISCREEN series	2 mm		Lower deck	Screen section, large	1 mm	1 pc.	2453837
			G harp screen/piano wire for MOBISCREEN series	2 mm		Lower deck	Screen section, small	1 mm	1 pc.	2354104
			G harp screen/piano wire for MOBISCREEN series	3 mm		Lower deck	Screen section, large	1 mm	1 pc.	2453840
			G harp screen/piano wire for MOBISCREEN series	3 mm		Lower deck	Screen section, small	1 mm	1 pc.	2447447
			G harp screen/piano wire for MOBISCREEN series	4 mm		Lower deck	Screen section, large	1.2 mm	1 pc.	2448606

HARP SCREENS										
Series code	Serial code	Series range	Version	Clear mesh size	Mesh length	Deck	Position	Wire diameter	Requirement	Part no.
MSC 703 EVO	K084	1 - 9999	G harp screen/piano wire for MOBI-SCREEN series	4 mm		Lower deck	Screen section, small	1.2 mm	1 pc.	2447459
			G harp screen/piano wire for MOBI-SCREEN series	5 mm		Lower deck	Screen section, large	1.2 mm	1 pc.	2453879
			G harp screen/piano wire for MOBI-SCREEN series	5 mm		Lower deck	Screen section, small	1.2 mm	1 pc.	2354103
			G harp screen/piano wire for MOBI-SCREEN series	6 mm		Lower deck	Screen section, small	1.6 mm	1 pc.	2428273
			G harp screen/piano wire for MOBI-SCREEN series	6 mm		Lower deck	Screen section, large	1.6 mm	1 pc.	2447936
			G harp screen/piano wire for MOBI-SCREEN series	8 mm		Lower deck	Screen section, small	2 mm	1 pc.	2551178
			G harp screen/piano wire for MOBI-SCREEN series	8 mm		Lower deck	Screen section, large	2 mm	1 pc.	2551179
			W harp screen/long slot for MOBI-SCREEN series	10 mm	150 mm	Lower deck	Screen section, large	2.5 mm	1 pc.	2673669
			W harp screen/long slot for MOBI-SCREEN series	10 mm	150 mm	Lower deck	Screen section, small	2.5 mm	1 pc.	2673601
			W harp screen/long slot for MOBI-SCREEN series	6 mm	150 mm	Lower deck	Screen section, large	2 mm	1 pc.	2679965
			W harp screen/long slot for MOBI-SCREEN series	6 mm	150 mm	Lower deck	Screen section, small	2 mm	1 pc.	2679963
			W harp screen/long slot for MOBI-SCREEN series	8 mm	150 mm	Lower deck	Screen section, large	3 mm	1 pc.	2679966

HARP SCREENS

Series code	Serial code	Series range	Version	Clear mesh size	Mesh length	Deck	Position	Wire diameter	Requirement	Part no.
MSC 703 EVO	K084	1 - 9999	W harp screen/long slot for MOBISCREEN series	8 mm	150 mm	Lower deck	Screen section, small	3 mm	1 pc.	2679964
		10 - 9999	S-harp/piano wire for MOBISCREEN series	10 mm		Lower deck	Screen section, small; Screen section, large	10 mm	1 pc.	2634386
			S-harp/piano wire for MOBISCREEN series	6 mm		Lower deck	Screen section, small	6 mm; 2.5 mm	1 pc.	2731135
			S-harp/piano wire for MOBISCREEN series	6 mm		Lower deck	Screen section, large	6 mm; 2.5 mm	1 pc.	2731136
			S-harp/piano wire for MOBISCREEN series	8 mm		Lower deck	Screen section, large	8 mm; 2.5 mm	1 pc.	2731138
			G harp screen/piano wire for MOBISCREEN series	8 mm		Lower deck	Screen section, small	8 mm; 2.5 mm	1 pc.	2731137
MSC 703i EVO	K104	1 - 9999	G harp screen/piano wire for MOBISCREEN series	2 mm		Lower deck	Screen section, large	1 mm	1 pc.	2453837
			G harp screen/piano wire for MOBISCREEN series	2 mm		Lower deck	Screen section, small	1 mm	1 pc.	2354104
			G harp screen/piano wire for MOBISCREEN series	3 mm		Lower deck	Screen section, small	1 mm	1 pc.	2447447
			G harp screen/piano wire for MOBISCREEN series	3 mm		Lower deck	Screen section, large	1 mm	1 pc.	2453840
			G harp screen/piano wire for MOBISCREEN series	4 mm		Lower deck	Screen section, large	1.2 mm	1 pc.	2448606

HARP SCREENS										
Series code	Serial code	Series range	Version	Clear mesh size	Mesh length	Deck	Position	Wire diameter	Requirement	Part no.
MSC 703i EVO	K104	1 - 9999	G harp screen/piano wire for MOBI-SCREEN series	4 mm		Lower deck	Screen section, small	1.2 mm	1 pc.	2447459
			G harp screen/piano wire for MOBI-SCREEN series	5 mm		Lower deck	Screen section, small	1.2 mm	1 pc.	2354103
			G harp screen/piano wire for MOBI-SCREEN series	5 mm		Lower deck	Screen section, large	1.2 mm	1 pc.	2453879
			G harp screen/piano wire for MOBI-SCREEN series	6 mm		Lower deck	Screen section, small	1.6 mm	1 pc.	2428273
			G harp screen/piano wire for MOBI-SCREEN series	6 mm		Lower deck	Screen section, large	1.6 mm	1 pc.	2447936
			G harp screen/piano wire for MOBI-SCREEN series	8 mm		Lower deck	Screen section, small	2 mm	1 pc.	2551178
			G harp screen/piano wire for MOBI-SCREEN series	8 mm		Lower deck	Screen section, large	2 mm	1 pc.	2551179
			W harp screen/long slot for MOBI-SCREEN series	10 mm	150 mm	Lower deck	Screen section, small	2.5 mm	1 pc.	2673601
			W harp screen/long slot for MOBI-SCREEN series	10 mm	150 mm	Lower deck	Screen section, large	2.5 mm	1 pc.	2673669
			W harp screen/long slot for MOBI-SCREEN series	6 mm	150 mm	Lower deck	Screen section, small	2 mm	1 pc.	2679963
			W harp screen/long slot for MOBI-SCREEN series	6 mm	150 mm	Lower deck	Screen section, large	2 mm	1 pc.	2679965
			W harp screen/long slot for MOBI-SCREEN series	8 mm	150 mm	Lower deck	Screen section, small	3 mm	1 pc.	2679964

HARP SCREENS

Series code	Serial code	Series range	Version	Clear mesh size	Mesh length	Deck	Position	Wire diameter	Requirement	Part no.
MSC 703i EVO	K104	1 - 9999	W harp screen/long slot for MOBISCREEN series	8 mm	150 mm	Lower deck	Screen section, large	3 mm	1 pc.	2679966
		10 - 9999	S-harp/piano wire for MOBISCREEN series	10 mm		Lower deck	Screen section, small; Screen section, large	10 mm; 2.5 mm	1 pc.	2634386
			S-harp/piano wire for MOBISCREEN series	6 mm		Lower deck	Screen section, small	6 mm; 2.5 mm	1 pc.	2731135
			S-harp/piano wire for MOBISCREEN series	6 mm		Lower deck	Screen section, large	6 mm; 2.5 mm	1 pc.	2731136
			S-harp/piano wire for MOBISCREEN series	8 mm		Lower deck	Screen section, large	8 mm; 2.5 mm	1 pc.	2731138
			G harp screen/piano wire for MOBISCREEN series	8 mm		Lower deck	Screen section, small	8 mm; 2.5 mm	1 pc.	2731137
MSC 952 EVO	K085	1 - 9999	G harp screen/piano wire for MOBISCREEN series	2 mm		Lower deck	Screen section, large	1 mm	3 pc.	2354104
			G harp screen/piano wire for MOBISCREEN series	3 mm		Lower deck	Screen section, large	1 mm	3 pc.	2447447
			G harp screen/piano wire for MOBISCREEN series	4 mm		Lower deck	Screen section, large	1.2 mm	3 pc.	2447459
			G harp screen/piano wire for MOBISCREEN series	5 mm		Lower deck	Screen section, large	1.2 mm	3 pc.	2354103
			G harp screen/piano wire for MOBISCREEN series	6 mm		Lower deck	Screen section, large	1.6 mm	3 pc.	2428273

HARP SCREENS										
Series code	Serial code	Series range	Version	Clear mesh size	Mesh length	Deck	Position	Wire diameter	Requirement	Part no.
MSC 952 EVO	K085	1 - 9999	G harp screen/piano wire for MOBISCREEN series	8 mm		Lower deck	Screen section, large	2 mm	3 pc.	2551178
			W harp screen/long slot for MOBISCREEN series	10 mm	150 mm	Lower deck	Screen section, large	2.5 mm	3 pc.	2673601
			W harp screen/long slot for MOBISCREEN series	6 mm	150 mm	Lower deck	Screen section, large	2 mm	3 pc.	2679963
			W harp screen/long slot for MOBISCREEN series	8 mm	150 mm	Lower deck	Screen section, large	3 mm	3 pc.	2679964
		10 - 9999	S-harp/piano wire for MOBISCREEN series	10 mm		Lower deck	Screen section, small	10 mm	3 pc.	2634386
			S-harp/piano wire for MOBISCREEN series	6 mm		Lower deck	Screen section, small	6 mm; 2.5 mm	3 pc.	2731135
			G harp screen/piano wire for MOBISCREEN series	8 mm		Lower deck	Screen section, small	8 mm; 2.5 mm	3 pc.	2731137
MSC 952i EVO	K105	1 - 9999	G harp screen/piano wire for MOBISCREEN series	2 mm		Lower deck	Screen section, large	1 mm	3 pc.	2354104
			G harp screen/piano wire for MOBISCREEN series	3 mm		Lower deck	Screen section, large	1 mm	3 pc.	2447447
			G harp screen/piano wire for MOBISCREEN series	4 mm		Lower deck	Screen section, large	1.2 mm	3 pc.	2447459
			G harp screen/piano wire for MOBISCREEN series	5 mm		Lower deck	Screen section, large	1.2 mm	3 pc.	2354103
			G harp screen/piano wire for MOBISCREEN series	6 mm		Lower deck	Screen section, large	1.6 mm	3 pc.	2428273

HARP SCREENS

Series code	Serial code	Series range	Version	Clear mesh size	Mesh length	Deck	Position	Wire diameter	Requirement	Part no.
MSC 952i EVO	K105	1 - 9999	G harp screen/piano wire for MOBI-SCREEN series	8 mm		Lower deck	Screen section, large	2 mm	3 pc.	2551178
			W harp screen/long slot for MOBI-SCREEN series	10 mm	150 mm	Lower deck	Screen section, large	2.5 mm	3 pc.	2673601
			W harp screen/long slot for MOBI-SCREEN series	6 mm	150 mm	Lower deck	Screen section, large	2 mm	3 pc.	2679963
			W harp screen/long slot for MOBI-SCREEN series	8 mm	150 mm	Lower deck	Screen section, large	3 mm	3 pc.	2679964
		10 - 9999	S-harp/piano wire for MOBISCREEN series	10 mm		Lower deck	Screen section, small	10 mm; 2.5 mm	3 pc.	2634386
			S-harp/piano wire for MOBISCREEN series	6 mm		Lower deck	Screen section, small	6 mm; 2.5 mm	3 pc.	2731135
			G harp screen/piano wire for MOBI-SCREEN series	8 mm		Lower deck	Screen section, small	8 mm; 2.5 mm	3 pc.	2731137
MSC 953 EVO	K086	1 - 9999	G harp screen/piano wire for MOBI-SCREEN series	2 mm		Lower deck	Screen section, large	1 mm	3 pc.	2354104
			G harp screen/piano wire for MOBI-SCREEN series	3 mm		Lower deck	Screen section, large	1 mm	3 pc.	2447447
			G harp screen/piano wire for MOBI-SCREEN series	4 mm		Lower deck	Screen section, large	1.2 mm	3 pc.	2447459
			G harp screen/piano wire for MOBI-SCREEN series	5 mm		Lower deck	Screen section, large	1.2 mm	3 pc.	2354103
			G harp screen/piano wire for MOBI-SCREEN series	6 mm		Lower deck	Screen section, large	1.6 mm	3 pc.	2428273

HARP SCREENS										
Series code	Serial code	Series range	Version	Clear mesh size	Mesh length	Deck	Position	Wire diameter	Requirement	Part no.
MSC 953 EVO	K086	1 - 9999	G harp screen/piano wire for MOBISCREEN series	8 mm		Lower deck	Screen section, large	2 mm	3 pc.	2551178
			W harp screen/long slot for MOBISCREEN series	10 mm	150 mm	Lower deck	Screen section, large	2.5 mm	3 pc.	2673601
			W harp screen/long slot for MOBISCREEN series	6 mm	150 mm	Lower deck	Screen section, large	2 mm	3 pc.	2679963
			W harp screen/long slot for MOBISCREEN series	8 mm	150 mm	Lower deck	Screen section, large	3 mm	3 pc.	2679964
		10 - 9999	S-harp/piano wire for MOBISCREEN series	10 mm		Lower deck	Screen section, small	10 mm	3 pc.	2634386
			S-harp/piano wire for MOBISCREEN series	6 mm		Lower deck	Screen section, small	6 mm; 2.5 mm	3 pc.	2731135
			G harp screen/piano wire for MOBISCREEN series	8 mm		Lower deck	Screen section, small	8 mm; 2.5 mm	3 pc.	2731137
MSC 953i EVO	K106	1 - 9999	G harp screen/piano wire for MOBISCREEN series	2 mm		Lower deck	Screen section, large	1 mm	3 pc.	2354104
			G harp screen/piano wire for MOBISCREEN series	3 mm		Lower deck	Screen section, large	1 mm	3 pc.	2447447
			G harp screen/piano wire for MOBISCREEN series	4 mm		Lower deck	Screen section, large	1.2 mm	3 pc.	2447459
			G harp screen/piano wire for MOBISCREEN series	5 mm		Lower deck	Screen section, large	1.2 mm	3 pc.	2354103
			G harp screen/piano wire for MOBISCREEN series	6 mm		Lower deck	Screen section, large	1.6 mm	3 pc.	2428273

HARP SCREENS

Series code	Serial code	Series range	Version	Clear mesh size	Mesh length	Deck	Position	Wire diameter	Requirement	Part no.
MSC 953i EVO	K106	1 - 9999	G harp screen/piano wire for MOBISCREEN series	8 mm		Lower deck	Screen section, large	2 mm	3 pc.	2551178
			W harp screen/long slot for MOBISCREEN series	10 mm	150 mm	Lower deck	Screen section, large	2.5 mm	3 pc.	2673601
			W harp screen/long slot for MOBISCREEN series	6 mm	150 mm	Lower deck	Screen section, large	2 mm	3 pc.	2679963
			W harp screen/long slot for MOBISCREEN series	8 mm	150 mm	Lower deck	Screen section, large	3 mm	3 pc.	2679964
		10 - 9999	S-harp/piano wire for MOBISCREEN series	10 mm		Lower deck	Screen section, small	10 mm; 2.5 mm	3 pc.	2634386
			S-harp/piano wire for MOBISCREEN series	6 mm		Lower deck	Screen section, small	6 mm; 2.5 mm	3 pc.	2731135
			G harp screen/piano wire for MOBISCREEN series	8 mm		Lower deck	Screen section, small	8 mm; 2.5 mm	3 pc.	2731137
MCO 90 EVO	K120	15 - 9999	G harp screen/piano wire for MOBISCREEN series	10 mm		Lower deck - NSE	Screen section, large	2 mm	2 pc.	3063936
			G harp screen/piano wire for MOBISCREEN series	2 mm		Lower deck - NSE	Screen section, large	1 mm	3 pc.	3063928
			G harp screen/piano wire for MOBISCREEN series	2.5 mm		Lower deck - NSE	Screen section, large	1 mm	3 pc.	3063929

HARP SCREENS										
Series code	Serial code	Series range	Version	Clear mesh size	Mesh length	Deck	Position	Wire diameter	Requirement	Part no.
MCO 90 EVO	K120	15 - 9999	G harp screen/piano wire for MOBI-SCREEN series	4 mm		Lower deck - NSE	Screen section, large	1.2 mm	3 pc.	3063930
			G harp screen/piano wire for MOBI-SCREEN series	5 mm		Lower deck - NSE	Screen section, large	1.4 mm	3 pc.	3063931
			G harp screen/piano wire for MOBI-SCREEN series	6 mm		Lower deck - NSE	Screen section, large	1.6 mm	3 pc.	3063932
			G harp screen/piano wire for MOBI-SCREEN series	7 mm		Lower deck - NSE	Screen section, large	1.6 mm	3 pc.	3063933
			G harp screen/piano wire for MOBI-SCREEN series	8 mm		Lower deck - NSE	Screen section, large	1.6 mm	3 pc.	3063934
			G harp screen/piano wire for MOBI-SCREEN series	9 mm		Lower deck - NSE	Screen section, large	2 mm	3 pc.	3063935
	K121	52 - 9999	G harp screen/piano wire for MOBI-SCREEN series	10 mm		Lower deck - NSE	Screen section, large	2 mm	2 pc.	3063936
			G harp screen/piano wire for MOBI-SCREEN series	2 mm		Lower deck - NSE	Screen section, large	1 mm	3 pc.	3063928

HARP SCREENS

Series code	Serial code	Series range	Version	Clear mesh size	Mesh length	Deck	Position	Wire diameter	Requirement	Part no.
MCO 90 EVO	K121	52 - 9999	G harp screen/piano wire for MOBI-SCREEN series	2.5 mm		Lower deck - NSE	Screen section, large	1 mm	3 pc.	3063929
			G harp screen/piano wire for MOBI-SCREEN series	4 mm		Lower deck - NSE	Screen section, large	1.2 mm	3 pc.	3063930
			G harp screen/piano wire for MOBI-SCREEN series	5 mm		Lower deck - NSE	Screen section, large	1.4 mm	3 pc.	3063931
			G harp screen/piano wire for MOBI-SCREEN series	6 mm		Lower deck - NSE	Screen section, large	1.6 mm	3 pc.	3063932
			G harp screen/piano wire for MOBI-SCREEN series	7 mm		Lower deck - NSE	Screen section, large	1.6 mm	3 pc.	3063933
			G harp screen/piano wire for MOBI-SCREEN series	8 mm		Lower deck - NSE	Screen section, large	1.6 mm	3 pc.	3063934
			G harp screen/piano wire for MOBI-SCREEN series	9 mm		Lower deck - NSE	Screen section, large	2 mm	3 pc.	3063935
MSS 802 EVO	K082	10 - 9999	G harp screen/piano wire for MOBI-SCREEN series	4 mm		Lower deck		4 mm	3 pc.	2999888
			G harp screen/piano wire for MOBI-SCREEN series	5 mm		Lower deck		5 mm; 1.6 mm	3 pc.	2999889

HARP SCREENS										
Series code	Serial code	Series range	Version	Clear mesh size	Mesh length	Deck	Position	Wire diameter	Requirement	Part no.
MSS 802 EVO	K082	10 - 9999	G harp screen/piano wire for MOBI-SCREEN series	6 mm		Lower deck		1.6 mm	3 pc.	2950729
			G harp screen/piano wire for MOBI-SCREEN series	6 mm		Lower deck		6 mm; 2 mm	3 pc.	2999892
			G harp screen/piano wire for MOBI-SCREEN series	8 mm		Lower deck		8 mm; 3 mm	3 pc.	2999896
			W harp screen/long slot for MOBI-SCREEN series	10 mm	100 mm	Lower deck		10 mm	3 pc.	2963004
			W harp screen/long slot for MOBI-SCREEN series	6 mm	100 mm	Lower deck		6 mm; 2 mm	3 pc.	2978752
			W harp screen/long slot for MOBI-SCREEN series	8 mm	150 mm	Lower deck		8 mm; 3 mm	3 pc.	2825553
MR 130 PRO	K125	1 - 9999	G harp screen/piano wire for MOBI-SCREEN series	3 mm		Lower deck - NSE	Screen section, large	3 mm	3 pc.	2974467
			G harp screen/piano wire for MOBI-SCREEN series	5 mm		Lower deck - NSE	Screen section, large	3 mm	3 pc.	2974464
			G harp screen/piano wire for MOBI-SCREEN series	6 mm		Lower deck - NSE	Screen section, large	3 mm	3 pc.	2974465
			G harp screen/piano wire for MOBI-SCREEN series	8 mm		Lower deck - NSE	Screen section, large	3 mm	3 pc.	2974466

HARP SCREENS

Series code	Serial code	Series range	Version	Clear mesh size	Mesh length	Deck	Position	Wire diameter	Requirement	Part no.
MR 130 PRO	K125	1 - 9999	W harp screen/long slot for MOBI-SCREEN series	4 mm	100 mm	Lower deck - NSE	Screen section, large	1.4 mm	3 pc.	2974462
	K124	1 - 9999	G harp screen/piano wire for MOBI-SCREEN series	3 mm		Lower deck - NSE	Screen section, large	1.4 mm	3 pc.	2974467
			G harp screen/piano wire for MOBI-SCREEN series	5 mm		Lower deck - NSE	Screen section, large	1.4 mm	3 pc.	2974464
			G harp screen/piano wire for MOBI-SCREEN series	6 mm		Lower deck - NSE	Screen section, large	1.4 mm	3 pc.	2974465
			G harp screen/piano wire for MOBI-SCREEN series	8 mm		Lower deck - NSE	Screen section, large	1.4 mm	3 pc.	2974466
			W harp screen/long slot for MOBI-SCREEN series	4 mm	100 mm	Lower deck - NSE	Screen section, large	1.4 mm	3 pc.	2974462
MS 15 Z	K047	1 - 9999	G harp screen/piano wire for MOBI-SCREEN series	10 mm		Lower deck	Screen section, large	1.5 mm	3 pc.	2414143
			G harp screen/piano wire for MOBI-SCREEN series	12 mm		Lower deck	Screen section, large	1.8 mm	3 pc.	2414145
			G harp screen/piano wire for MOBI-SCREEN series	2 mm		Lower deck	Screen section, large	0.7 mm	3 pc.	2414132

HARP SCREENS										
Series code	Serial code	Series range	Version	Clear mesh size	Mesh length	Deck	Position	Wire diameter	Requirement	Part no.
MS 15 Z	K047	1 - 9999	G harp screen/piano wire for MOBI-SCREEN series	3 mm		Lower deck	Screen section, large	0.8 mm	3 pc.	2414134
			G harp screen/piano wire for MOBI-SCREEN series	4 mm		Lower deck	Screen section, large	1 mm	3 pc.	2414135
			G harp screen/piano wire for MOBI-SCREEN series	5 mm		Lower deck	Screen section, large	1 mm	3 pc.	2414136
			G harp screen/piano wire for MOBI-SCREEN series	6 mm		Lower deck	Screen section, large	1.2 mm	3 pc.	2414138
			G harp screen/piano wire for MOBI-SCREEN series	8 mm		Lower deck	Screen section, large	1.5 mm	3 pc.	2414142
			W harp screen/long slot for MOBI-SCREEN series	10 mm	100 mm	Lower deck	Screen section, large	4 mm	3 pc.	2601139
			W harp screen/long slot for MOBI-SCREEN series	12 mm	100 mm	Lower deck	Screen section, large	3 mm	3 pc.	M20001674
			W harp screen/long slot for MOBI-SCREEN series	20 mm	100 mm	Lower deck	Screen section, large	5 mm	3 pc.	2363181
			W harp screen/long slot for MOBI-SCREEN series	6 mm	150 mm	Lower deck	Screen section, large	2 mm	3 pc.	2591014
			W harp screen/long slot for MOBI-SCREEN series	8 mm	150 mm	Lower deck	Screen section, large	3 mm	3 pc.	2683195
MSS 802 EVO	K102	10 - 9999	G harp screen/piano wire for MOBI-SCREEN series	4 mm		Lower deck		4 mm	3 pc.	2999888
			G harp screen/piano wire for MOBI-SCREEN series	5 mm		Lower deck		5 mm; 1.6 mm	3 pc.	2999889

HARP SCREENS

Series code	Serial code	Series range	Version	Clear mesh size	Mesh length	Deck	Position	Wire diameter	Requirement	Part no.
MSS 802 EVO	K102	10 - 9999	G harp screen/piano wire for MOBI-SCREEN series	6 mm		Lower deck		1.6 mm	3 pc.	2950729
			G harp screen/piano wire for MOBI-SCREEN series	6 mm		Lower deck		6 mm; 2 mm	3 pc.	2999892
			G harp screen/piano wire for MOBI-SCREEN series	8 mm		Lower deck		8 mm; 2 mm	3 pc.	2999896
			W harp screen/long slot for MOBI-SCREEN series	10 mm	100 mm	Lower deck		10 mm; 3 mm	3 pc.	2963004
			W harp screen/long slot for MOBI-SCREEN series	6 mm	100 mm	Lower deck		6 mm; 2 mm	3 pc.	2978752
			W harp screen/long slot for MOBI-SCREEN series	8 mm	150 mm	Lower deck		8 mm; 3 mm	3 pc.	2825553
MSC 702 EVO	K148	1 - 9999	S-harp/piano wire for MOBISCREEN series	6 mm		Lower deck	Screen section, small	6 mm; 2.5 mm	1 pc.	2731135
			G harp screen/piano wire for MOBI-SCREEN series	2 mm		Lower deck	Screen section, small	1 mm	1 pc.	2354104
			G harp screen/piano wire for MOBI-SCREEN series	3 mm		Lower deck	Screen section, small	1 mm	1 pc.	2447447
			G harp screen/piano wire for MOBI-SCREEN series	4 mm		Lower deck	Screen section, small	1.2 mm	1 pc.	2447459
			G harp screen/piano wire for MOBI-SCREEN series	5 mm		Lower deck	Screen section, small	1.2 mm	1 pc.	2354103
			G harp screen/piano wire for MOBI-SCREEN series	6 mm		Lower deck	Screen section, small	1.6 mm	1 pc.	2428273

HARP SCREENS

Series code	Serial code	Series range	Version	Clear mesh size	Mesh length	Deck	Position	Wire diameter	Requirement	Part no.
MSC 702 EVO	K148	1 - 9999	G harp screen/piano wire for MOBI-SCREEN series	8 mm		Lower deck	Screen section, large	2 mm	1 pc.	2551179
			G harp screen/piano wire for MOBI-SCREEN series	8 mm		Lower deck	Screen section, small	2 mm	1 pc.	2551178
			G harp screen/piano wire for MOBI-SCREEN series	8 mm		Lower deck	Screen section, small	8 mm; 2.5 mm	1 pc.	2731137
	K149	1 - 9999	S-harp/piano wire for MOBISCREEN series	6 mm		Lower deck	Screen section, small	6 mm; 2.5 mm	1 pc.	2731135
			G harp screen/piano wire for MOBI-SCREEN series	2 mm		Lower deck	Screen section, small	1 mm	1 pc.	2354104
			G harp screen/piano wire for MOBI-SCREEN series	3 mm		Lower deck	Screen section, small	1 mm	1 pc.	2447447
			G harp screen/piano wire for MOBI-SCREEN series	4 mm		Lower deck	Screen section, small	1.2 mm	1 pc.	2447459
			G harp screen/piano wire for MOBI-SCREEN series	5 mm		Lower deck	Screen section, small	1.2 mm	1 pc.	2354103
			G harp screen/piano wire for MOBI-SCREEN series	6 mm		Lower deck	Screen section, small	1.6 mm	1 pc.	2428273
			G harp screen/piano wire for MOBI-SCREEN series	8 mm		Lower deck	Screen section, small	2 mm	1 pc.	2551178
			G harp screen/piano wire for MOBI-SCREEN series	8 mm		Lower deck	Screen section, small	8 mm; 2.5 mm	1 pc.	2731137
			G harp screen/piano wire for MOBI-SCREEN series	8 mm		Lower deck	Screen section, large	2 mm	1 pc.	2551179

HARP SCREENS

Series code	Serial code	Series range	Version	Clear mesh size	Mesh length	Deck	Position	Wire diameter	Requirement	Part no.
MSC 703 EVO	K150, K151	1 - 9999	S-harp/piano wire for MOBISCREEN series	6 mm		Lower deck	Screen section, small	6 mm; 2.5 mm	1 pc.	2731135
			G harp screen/piano wire for MOBISCREEN series	2 mm		Lower deck	Screen section, small	1 mm	1 pc.	2354104
			G harp screen/piano wire for MOBISCREEN series	3 mm		Lower deck	Screen section, small	1 mm	1 pc.	2447447
			G harp screen/piano wire for MOBISCREEN series	4 mm		Lower deck	Screen section, small	1.2 mm	1 pc.	2447459
			G harp screen/piano wire for MOBISCREEN series	5 mm		Lower deck	Screen section, small	1.2 mm	1 pc.	2354103
			G harp screen/piano wire for MOBISCREEN series	6 mm		Lower deck	Screen section, small	1.6 mm	1 pc.	2428273
			G harp screen/piano wire for MOBISCREEN series	8 mm		Lower deck	Screen section, small	2 mm	1 pc.	2551178
			G harp screen/piano wire for MOBISCREEN series	8 mm		Lower deck	Screen section, small	8 mm; 2.5 mm	1 pc.	2731137
			G harp screen/piano wire for MOBISCREEN series	8 mm		Lower deck	Screen section, large	2 mm	1 pc.	2551179
MSC 952 EVO	K152, K153	1 - 9999	S-harp/piano wire for MOBISCREEN series	6 mm		Lower deck	Screen section, small	6 mm; 2.5 mm	3 pc.	2731135
			G harp screen/piano wire for MOBISCREEN series	2 mm		Lower deck	Screen section, large	1 mm	3 pc.	2354104
			G harp screen/piano wire for MOBISCREEN series	3 mm		Lower deck	Screen section, large	1 mm	3 pc.	2447447

HARP SCREENS										
Series code	Serial code	Series range	Version	Clear mesh size	Mesh length	Deck	Position	Wire diameter	Requirement	Part no.
MSC 952 EVO	K152, K153	1 - 9999	G harp screen/piano wire for MOBISCREEN series	4 mm		Lower deck	Screen section, large	1.2 mm	3 pc.	2447459
			G harp screen/piano wire for MOBISCREEN series	5 mm		Lower deck	Screen section, large	1.2 mm	3 pc.	2354103
			G harp screen/piano wire for MOBISCREEN series	6 mm		Lower deck	Screen section, large	1.6 mm	3 pc.	2428273
			G harp screen/piano wire for MOBISCREEN series	8 mm		Lower deck	Screen section, large	2 mm	3 pc.	2551178
			G harp screen/piano wire for MOBISCREEN series	8 mm		Lower deck	Screen section, small	8 mm; 2.5 mm	3 pc.	2731137
MSC 953 EVO	K154, K155	1 - 9999	S-harp/piano wire for MOBISCREEN series	6 mm		Lower deck	Screen section, small	6 mm; 2.5 mm	3 pc.	2731135
			G harp screen/piano wire for MOBISCREEN series	2 mm		Lower deck	Screen section, large	1 mm	3 pc.	2354104
			G harp screen/piano wire for MOBISCREEN series	3 mm		Lower deck	Screen section, large	1 mm	3 pc.	2447447
			G harp screen/piano wire for MOBISCREEN series	4 mm		Lower deck	Screen section, large	1.2 mm	3 pc.	2447459
			G harp screen/piano wire for MOBISCREEN series	5 mm		Lower deck	Screen section, large	1.2 mm	3 pc.	2354103
			G harp screen/piano wire for MOBISCREEN series	6 mm		Lower deck	Screen section, large	1.6 mm	3 pc.	2428273
			G harp screen/piano wire for MOBISCREEN series	8 mm		Lower deck	Screen section, large	2 mm	3 pc.	2551178

HARP SCREENS

Series code	Serial code	Series range	Version	Clear mesh size	Mesh length	Deck	Position	Wire diameter	Requirement	Part no.
MSC 953 EVO	K154, K155	1 - 9999	G harp screen/piano wire for MOBI-SCREEN series	8 mm		Lower deck	Screen section, small	8 mm; 2.5 mm	3 pc.	2731137

FINGER SCREENS

Genuine KLEEMANN finger screens are ideal for screening materials that are hard to separate, such as moist and sticky bulk materials, and when recycling mixed rubble. The separation of flaky/slabby and bulky screenings in scalpers is therefore no problem at all.

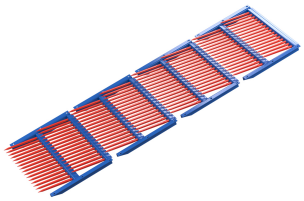

FINGER SCREENS

Series code	Serial code	Series range	Clear mesh size	Requirement	Deck	Part no.
MSS 502 EVO	K066	1 - 9999	100 mm	4 pc.	Upper deck	3031186
			50 mm	4 pc.	Upper deck	3033644
			60 mm	4 pc.	Upper deck	3033648
			75 mm	4 pc.	Upper deck	3031185
MSS 1102 PRO	K076	1 - 9999	100 mm	5 pc.	Upper deck	3037749
			50 mm	5 pc.	Upper deck	3037747
			75 mm	5 pc.	Upper deck	2651373
MSS 802 EVO	K082	10 - 9999	100 mm	1 pc.	Upper deck	WX3181450
			50 mm	1 pc.	Upper deck	WX3181447
			65 mm	1 pc.	Upper deck	WX3183592
			75 mm	1 pc.	Upper deck	WX3181448
MS 15 Z	K047	1 - 9999	100 mm	4 pc.	Upper deck	2240020
			50 mm	4 pc.	Upper deck	M10025584

FINGER SCREENS

Series code	Serial code	Series range	Clear mesh size	Requirement	Deck	Part no.
MS 15 Z	K047	1 - 9999	75 mm	4 pc.	Upper deck	F20014437
MSS 802 EVO	K102	1 - 9999	100 mm	4 pc.	Upper deck	2776725
			50 mm	4 pc.	Upper deck	2776559
			75 mm	4 pc.	Upper deck	2662783
		10 - 9999	100 mm	1 pc.	Upper deck	WX3181450
			50 mm	1 pc.	Upper deck	WX3181447
			65 mm	1 pc.	Upper deck	WX3183592
			75 mm	1 pc.	Upper deck	WX3181448
MSS 1102 PRO	K144, K145	10 - 9999	50 mm	5 pc.	Upper deck	WX3196224
			75 mm	5 pc.	Upper deck	WX3197814

HYDRAULIC FOLDING GRATES

Genuine hydraulic folding grates from KLEEMANN separate the material entering the machine from materials that are too coarse.

HYDRAULIC FOLDING GRATES

Series code	Serial code	Series range	Part	Gap width	Deck	Position	Requirement: feed hopper, short	Requirement: feed hopper, long	Part no.
MSC 702 EVO	K083	10 - 39	SG-GRADE 100 foldable slotted grate	100 mm	Upper deck	right	1 pc.	1 pc.	2507573
				100 mm	Upper deck	left		1 pc.	2507539
				100 mm	Upper deck	centre	3 pc.	4 pc.	2507551
				100 mm	Upper deck	left	1 pc.		2507511
		40 - 9999	Single grille bar	100 mm	Upper deck		30 pc.	33 pc.	2583775

HYDRAULIC FOLDING GRATES

Series code	Serial code	Series range	Part	Gap width	Deck	Position	Requirement: feed hopper, short	Requirement: feed hopper, long	Part no.
MSC 702 EVO	K083	40 - 9999	SG-GRADE 100 foldable slotted grate	100 mm	Upper deck	right	1 pc.	1 pc.	2581948
				100 mm	Upper deck	left		1 pc.	2582061
				100 mm	Upper deck	left	1 pc.		2585308
				100 mm	Upper deck	centre	3 pc.	4 pc.	2583781
MSC 702i EVO	K103	10 - 15	SG-GRADE 100 foldable slotted grate	100 mm	Upper deck	left		1 pc.	2507539
				100 mm	Upper deck	centre	3 pc.	4 pc.	2507551
				100 mm	Upper deck	right	1 pc.	1 pc.	2507573
				100 mm	Upper deck	left	1 pc.		2507511
		16 - 9999	Single grille bar	100 mm	Upper deck		30 pc.	33 pc.	2583775
			SG-GRADE 100 foldable slotted grate	100 mm	Upper deck	right	1 pc.	1 pc.	2581948
				100 mm	Upper deck	left		1 pc.	2582061
				100 mm	Upper deck	left	1 pc.		2585308
				100 mm	Upper deck	centre	3 pc.	4 pc.	2583781
MSC 703 EVO	K084	10 - 53	SG-GRADE 100 foldable slotted grate	100 mm	Upper deck	left		1 pc.	2507539
				100 mm	Upper deck	centre	3 pc.	4 pc.	2507551
				100 mm	Upper deck	right	1 pc.	1 pc.	2507573
				100 mm	Upper deck	left	1 pc.		2507511
		54 - 9999	Single grille bar	100 mm	Upper deck		30 pc.	33 pc.	2583775
			SG-GRADE 100 foldable slotted grate	100 mm	Upper deck	right	1 pc.	1 pc.	2581948
				100 mm	Upper deck	left		1 pc.	2582061
				100 mm	Upper deck	left	1 pc.		2585308
				100 mm	Upper deck	centre	3 pc.	4 pc.	2583781
MSC 703i EVO	K104	10 - 14	SG-GRADE 100 foldable slotted grate	100 mm	Upper deck	left		1 pc.	2507539
				100 mm	Upper deck	centre	3 pc.	4 pc.	2507551
				100 mm	Upper deck	right	1 pc.	1 pc.	2507573
				100 mm	Upper deck	left	1 pc.		2507511

HYDRAULIC FOLDING GRATES

Series code	Serial code	Series range	Part	Gap width	Deck	Position	Requirement: feed hopper, short	Requirement: feed hopper, long	Part no.
MSC 703i EVO	K104	15 - 9999	Single grille bar	100 mm	Upper deck		30 pc.	33 pc.	2583775
			SG-GRADE 100 foldable slotted grate	100 mm	Upper deck	right	1 pc.	1 pc.	2581948
				100 mm	Upper deck	left		1 pc.	2582061
				100 mm	Upper deck	centre	3 pc.	4 pc.	2583781
				100 mm	Upper deck	left	1 pc.		2585308
MSC 952 EVO	K085	10 - 27	SG-GRADE 100 foldable slotted grate	100 mm	Upper deck	left		1 pc.	2507539
				100 mm	Upper deck	right	1 pc.	1 pc.	2507573
				100 mm	Upper deck	centre	3 pc.	4 pc.	2507551
				100 mm	Upper deck	left	1 pc.		2507511
		28 - 9999	Single grille bar	100 mm	Upper deck		30 pc.	33 pc.	2583775
			SG-GRADE 100 foldable slotted grate	100 mm	Upper deck	right	1 pc.	1 pc.	2581948
				100 mm	Upper deck	left		1 pc.	2582061
				100 mm	Upper deck	left	1 pc.		2585308
				100 mm	Upper deck	centre	3 pc.	4 pc.	2583781
MSC 952i EVO	K105	10 - 16	SG-GRADE 100 foldable slotted grate	100 mm	Upper deck	left		1 pc.	2507539
				100 mm	Upper deck	centre	3 pc.	4 pc.	2507551
				100 mm	Upper deck	right	1 pc.	1 pc.	2507573
				100 mm	Upper deck	left	1 pc.		2507511
		17 - 9999	Single grille bar	100 mm	Upper deck		30 pc.	33 pc.	2583775
			SG-GRADE 100 foldable slotted grate	100 mm	Upper deck	right	1 pc.	1 pc.	2581948
				100 mm	Upper deck	left		1 pc.	2582061
				100 mm	Upper deck	centre	3 pc.	4 pc.	2583781
				100 mm	Upper deck	left	1 pc.		2585308
MSC 953 EVO	K086	10 - 85	SG-GRADE 100 foldable slotted grate	100 mm	Upper deck	left		1 pc.	2507539
				100 mm	Upper deck	centre	3 pc.	4 pc.	2507551
				100 mm	Upper deck	right	1 pc.	1 pc.	2507573

HYDRAULIC FOLDING GRATES

Series code	Serial code	Series range	Part	Gap width	Deck	Position	Requirement: feed hopper, short	Requirement: feed hopper, long	Part no.
MSC 953 EVO	K086	10 - 85	SG-GRADE 100 foldable slotted grate	100 mm	Upper deck	left	1 pc.		2507511
		86 - 9999	Single grille bar	100 mm	Upper deck		30 pc.	33 pc.	2583775
			SG-GRADE 100 foldable slotted grate	100 mm	Upper deck	right	1 pc.	1 pc.	2581948
				100 mm	Upper deck	centre	3 pc.	4 pc.	2583781
				100 mm	Upper deck	left		1 pc.	2582061
				100 mm	Upper deck	left	1 pc.		2585308
MSC 953i EVO	K106	10 - 24	SG-GRADE 100 foldable slotted grate	100 mm	Upper deck	left		1 pc.	2507539
				100 mm	Upper deck	centre	3 pc.	4 pc.	2507551
				100 mm	Upper deck	right	1 pc.	1 pc.	2507573
				100 mm	Upper deck	left	1 pc.		2507511
		25 - 9999	Single grille bar	100 mm	Upper deck		30 pc.	33 pc.	2583775
			SG-GRADE 100 foldable slotted grate	100 mm	Upper deck	right	1 pc.	1 pc.	2581948
				100 mm	Upper deck	left	1 pc.		2585308
				100 mm	Upper deck	centre	3 pc.	4 pc.	2583781
				100 mm	Upper deck	left		1 pc.	2582061

ANTI-CLOGGING ROPES

Screening sticky material creates caking on the screen linings and thus impedes the further flow of the material. Fitting KLEEMANN anti-clogging ropes helps to avoid unwanted maintenance or downtimes during such applications.

ANTI-CLOGGING ROPES						
Series code	Serial code	Part	Version	for screen linings mesh size	Deck	Part no.
MSC 702 EVO	K083	Service package for anti-clogging ropes	Light	< 4 mm	Upper deck, middle deck, lower deck	2628665
			Standard	> 4 mm	Upper deck, middle deck, lower deck	2628667
MSC 702i EVO	K103	Service package for anti-clogging ropes	Light	< 4 mm	Upper deck, middle deck, lower deck	2628665
			Standard	> 4 mm	Upper deck, middle deck, lower deck	2628667
MSC 703 EVO	K084	Service package for anti-clogging ropes	Light	< 4 mm	Upper deck, middle deck, lower deck	2628665
			Standard	> 4 mm	Upper deck, middle deck, lower deck	2628667
MSC 703i EVO	K104	Service package for anti-clogging ropes	Light	< 4 mm	Upper deck, middle deck, lower deck	2628665
			Standard	> 4 mm	Upper deck, middle deck, lower deck	2628667
MSC 952 EVO	K085	Service package for anti-clogging ropes	Light	< 4 mm	Upper deck, middle deck, lower deck	2628662
			Standard	> 4 mm	Upper deck, middle deck, lower deck	2628663
MSC 952i EVO	K105	Service package for anti-clogging ropes	Light	< 4 mm	Upper deck, middle deck, lower deck	2628662
			Standard	> 4 mm	Upper deck, middle deck, lower deck	2628663
MSC 953 EVO	K086	Service package for anti-clogging ropes	Light	< 4 mm	Upper deck, middle deck, lower deck	2628662
			Standard	> 4 mm	Upper deck, middle deck, lower deck	2628663
MSC 953i EVO	K106	Service package for anti-clogging ropes	Light	< 4 mm	Upper deck, middle deck, lower deck	2628662
			Standard	> 4 mm	Upper deck, middle deck, lower deck	2628663
MSC 703 EVO	K150, K151	Service package for anti-clogging ropes	Standard	> 4 mm	Upper deck, middle deck, lower deck	2628663
MSC 953 EVO	K154, K155	Service package for anti-clogging ropes	Standard	> 4 mm	Upper deck, middle deck, lower deck	2628663

PERFORATED PLATES

In order to withstand the enormous impact and friction stresses and maximise service life, perforated plates are used made of particularly wear-resistant material.

PERFORATED PLATES											
Series code	Serial code	Series range	Special feature	Thickness	Aperture geometry	Clear mesh size	Section	Deck	Position	Requirement	Part no.
MC 100 EVO	K002, K011	1 - 9999		20 mm	Hexagonal	30 mm	Feeding/discharge	Upper deck	Feeding/discharge, upper deck	1 pc.	3058156
				20 mm	Hexagonal	35 mm	Feeding/discharge	Upper deck	Feeding/discharge, upper deck	1 pc.	3058009
				20 mm	Hexagonal	40 mm	Feeding/discharge	Upper deck	Feeding/discharge, upper deck	1 pc.	3057966
				20 mm	Hexagonal	45 mm	Feeding/discharge	Upper deck	Feeding/discharge, upper deck	1 pc.	3057912
				20 mm	Hexagonal	50 mm	Feeding/discharge	Upper deck	Feeding/discharge, upper deck	1 pc.	3057889

PERFORATED PLATES											
Series code	Serial code	Series range	Special feature	Thickness	Aperture geometry	Clear mesh size	Section	Deck	Position	Requirement	Part no.
MC 100 EVO	K002, K011	1 - 9999		20 mm	Hexagonal	60 mm	Feeding/discharge	Upper deck	Feeding/discharge, upper deck	1 pc.	3057861
				20 mm	Hexagonal	70 mm	Feeding/discharge	Upper deck	Feeding/discharge, upper deck	1 pc.	3057793
				20 mm	Hexagonal	80 mm	Feeding/discharge	Upper deck	Feeding/discharge, upper deck	1 pc.	3057270
MC 110 R EVO	K005	1 - 9999	with cross-bar	20 mm	Hexagonal	30 mm	Feeding/discharge	Upper deck	Feeding/discharge, upper deck	1 pc.	2854442
			with cross-bar	20 mm	Hexagonal	35 mm	Feeding/discharge	Upper deck	Feeding/discharge, upper deck	1 pc.	2856489
			with cross-bar	20 mm	Hexagonal	40 mm	Feeding/discharge	Upper deck	Feeding/discharge, upper deck	1 pc.	2856668

PERFORATED PLATES											
Series code	Serial code	Series range	Special feature	Thickness	Aperture geometry	Clear mesh size	Section	Deck	Position	Requirement	Part no.
MC 110 R EVO	K005	1 - 9999	with cross-bar	20 mm	Hexagonal	45 mm	Feeding/ discharge	Upper deck	Feeding/ discharge, upper deck	1 pc.	2857239
			with cross-bar	20 mm	Hexagonal	50 mm	Feeding/ discharge	Upper deck	Feeding/ discharge, upper deck	1 pc.	2857566
			with cross-bar	20 mm	Hexagonal	60 mm	Feeding/ discharge	Upper deck	Feeding/ discharge, upper deck	1 pc.	2857740
			with cross-bar	20 mm	Hexagonal	70 mm	Feeding/ discharge	Upper deck	Feeding/ discharge, upper deck	1 pc.	2858101
			with cross-bar	20 mm	Hexagonal	80 mm	Feeding/ discharge	Upper deck	Feeding/ discharge, upper deck	1 pc.	2858604
MC 110 Ri EVO	K014	1 - 9999	with cross-bar	20 mm	Hexagonal	30 mm	Feeding/ discharge	Upper deck	Feeding/ discharge, upper deck	1 pc.	2854442

PERFORATED PLATES											
Series code	Serial code	Series range	Special feature	Thickness	Aperture geometry	Clear mesh size	Section	Deck	Position	Requirement	Part no.
MC 110 Ri EVO	K014	1 - 9999	with cross-bar	20 mm	Hexagonal	80 mm	Feeding/ discharge	Upper deck	Feeding/ discharge, upper deck	1 pc.	2858604
MC 110 Z	K004	200 - 9999		20 mm	Hexagonal	30 mm	Infeed	Upper deck	Feeding/ discharge, upper deck	1 pc.	F20007098
MC 110 Z EVO	K006	1 - 9999	with cross-bar	20 mm	Hexagonal	30 mm	Feeding/ discharge	Upper deck	Feeding/ discharge, upper deck	1 pc.	2854442
			with cross-bar	20 mm	Hexagonal	35 mm	Feeding/ discharge	Upper deck	Feeding/ discharge, upper deck	1 pc.	2856489
			with cross-bar	20 mm	Hexagonal	40 mm	Feeding/ discharge	Upper deck	Feeding/ discharge, upper deck	1 pc.	2856668
			with cross-bar	20 mm	Hexagonal	45 mm	Feeding/ discharge	Upper deck	Feeding/ discharge, upper deck	1 pc.	2857239

PERFORATED PLATES

Series code	Serial code	Series range	Special feature	Thickness	Aperture geometry	Clear mesh size	Section	Deck	Position	Requirement	Part no.
MC 110 Z EVO	K006	1 - 9999	with cross-bar	20 mm	Hexagonal	50 mm	Feeding/discharge	Upper deck	Feeding/discharge, upper deck	1 pc.	2857566
			with cross-bar	20 mm	Hexagonal	60 mm	Feeding/discharge	Upper deck	Feeding/discharge, upper deck	1 pc.	2857740
			with cross-bar	20 mm	Hexagonal	70 mm	Feeding/discharge	Upper deck	Feeding/discharge, upper deck	1 pc.	2858101
			with cross-bar	20 mm	Hexagonal	80 mm	Feeding/discharge	Upper deck	Feeding/discharge, upper deck	1 pc.	2858604
MC 110 Zi EVO	K015	1 - 9999	with cross-bar	20 mm	Hexagonal	30 mm	Feeding/discharge	Upper deck	Feeding/discharge, upper deck	1 pc.	2854442
			with cross-bar	20 mm	Hexagonal	35 mm	Feeding/discharge	Upper deck	Feeding/discharge, upper deck	1 pc.	2856489

PERFORATED PLATES											
Series code	Serial code	Series range	Special feature	Thickness	Aperture geometry	Clear mesh size	Section	Deck	Position	Requirement	Part no.
MC 110 Zi EVO	K015	1 - 9999	with cross-bar	20 mm	Hexagonal	40 mm	Feeding/discharge	Upper deck	Feeding/discharge, upper deck	1 pc.	2856668
			with cross-bar	20 mm	Hexagonal	45 mm	Feeding/discharge	Upper deck	Feeding/discharge, upper deck	1 pc.	2857239
			with cross-bar	20 mm	Hexagonal	50 mm	Feeding/discharge	Upper deck	Feeding/discharge, upper deck	1 pc.	2857566
			with cross-bar	20 mm	Hexagonal	60 mm	Feeding/discharge	Upper deck	Feeding/discharge, upper deck	1 pc.	2857740
			with cross-bar	20 mm	Hexagonal	70 mm	Feeding/discharge	Upper deck	Feeding/discharge, upper deck	1 pc.	2858101
			with cross-bar	20 mm	Hexagonal	80 mm	Feeding/discharge	Upper deck	Feeding/discharge, upper deck	1 pc.	2858604
MC 120 Z	K007	53 - 9999		20 mm	Round	100 mm	Discharge	Upper deck	Lower deck discharge	1 pc.	2590122

PERFORATED PLATES											
Series code	Serial code	Series range	Special feature	Thickness	Aperture geometry	Clear mesh size	Section	Deck	Position	Requirement	Part no.
MC 120 Z	K007	53 - 9999		20 mm	Round	100 mm	Infeed	Upper deck	Upper deck infeed	1 pc.	2590149
				20 mm	Round	60 mm	Discharge	Upper deck	Lower deck discharge	1 pc.	2592194
				20 mm	Round	70 mm	Discharge	Upper deck	Lower deck discharge	1 pc.	2592209
				20 mm	Round	70 mm	Infeed	Upper deck	Upper deck infeed	1 pc.	2584681
				20 mm	Round	80 mm	Discharge	Upper deck	Lower deck discharge	1 pc.	2590121
				20 mm	Round	80 mm	Infeed	Upper deck	Upper deck infeed	1 pc.	2590095
MC 120 PRO	K034, K035	14 - 9999		20 mm	Hexagonal	60 mm	Feeding/ discharge	Upper deck	Feeding/ discharge, upper deck	1 pc.	3054919
				20 mm	Hexagonal	70 mm	Feeding/ discharge	Upper deck	Feeding/ discharge, upper deck	1 pc.	3054414
				20 mm	Hexagonal	80 mm	Feeding/ discharge	Upper deck	Feeding/ discharge, upper deck	1 pc.	3054920

PERFORATED PLATES											
Series code	Serial code	Series range	Special feature	Thickness	Aperture geometry	Clear mesh size	Section	Deck	Position	Requirement	Part no.
MC 120 PRO	K034, K035	14 - 9999		20 mm	Hexagonal	90 mm	Feeding/ discharge	Upper deck	Feeding/ discharge, upper deck	1 pc.	3054921
MR 110 Z EVO	K017	2 - 9999		20 mm	Round	30 mm	Infeed	Upper deck	Upper deck infeed	1 pc.	2584667
				20 mm	Hexagonal	30 mm	Infeed	Upper deck	Lower deck discharge	1 pc.	F20007098
				20 mm	Round	35 mm	Discharge	Upper deck	Lower deck discharge	1 pc.	2590423
				20 mm	Round	35 mm	Infeed	Upper deck	Upper deck infeed	1 pc.	2590405
				20 mm	Round	40 mm	Discharge	Upper deck	Lower deck discharge	1 pc.	2590393
				20 mm	Round	45 mm	Infeed	Upper deck	Upper deck infeed	1 pc.	2590358
				20 mm	Round	45 mm	Discharge	Upper deck	Lower deck discharge	1 pc.	2590364
				20 mm	Round	50 mm	Infeed	Upper deck	Upper deck infeed	1 pc.	2590334
				20 mm	Round	50 mm	Discharge	Upper deck	Lower deck discharge	1 pc.	2590351
				20 mm	Round	60 mm	Infeed	Upper deck	Upper deck infeed	1 pc.	2590282
				20 mm	Round	60 mm	Discharge	Upper deck	Lower deck discharge	1 pc.	2592140

PERFORATED PLATES

Series code	Serial code	Series range	Special feature	Thickness	Aperture geometry	Clear mesh size	Section	Deck	Position	Requirement	Part no.
MR 110 Z EVO	K017	2 - 9999		20 mm	Round	70 mm	Discharge	Upper deck	Lower deck discharge	1 pc.	2590274
				20 mm	Round	70 mm	Infeed	Upper deck	Upper deck infeed	1 pc.	2590262
				20 mm	Round	80 mm	Discharge	Upper deck	Lower deck discharge	1 pc.	2590291
				20 mm	Round	80 mm	Infeed	Upper deck	Upper deck infeed	1 pc.	2590318
MR 110 EVO	K018	1 - 9999		20 mm	Hexagonal	30 mm	Infeed	Upper deck	Upper deck infeed	1 pc.	3057114
				20 mm	Hexagonal	30 mm	Discharge	Upper deck	Lower deck discharge	1 pc.	3057152
				20 mm	Hexagonal	35 mm	Discharge	Upper deck	Lower deck discharge	1 pc.	3057092
				20 mm	Hexagonal	35 mm	Infeed	Upper deck	Upper deck infeed	1 pc.	3057067
				20 mm	Hexagonal	40 mm	Infeed	Upper deck	Upper deck infeed	1 pc.	3057028
				20 mm	Hexagonal	40 mm	Discharge	Upper deck	Lower deck discharge	1 pc.	3057009
				20 mm	Hexagonal	50 mm	Discharge	Upper deck	Upper deck infeed	1 pc.	3056940
				20 mm	Hexagonal	50 mm	Infeed	Upper deck	Lower deck discharge	1 pc.	3056934
				20 mm	Hexagonal	60 mm	Infeed	Upper deck	Upper deck infeed	1 pc.	3056820

PERFORATED PLATES											
Series code	Serial code	Series range	Special feature	Thickness	Aperture geometry	Clear mesh size	Section	Deck	Position	Requirement	Part no.
MR 110 EVO	K018	1 - 9999		20 mm	Hexagonal	60 mm	Discharge	Upper deck	Lower deck discharge	1 pc.	3056827
				20 mm	Hexagonal	70 mm	Discharge	Upper deck	Upper deck infeed	1 pc.	3056015
				20 mm	Hexagonal	70 mm	Infeed	Upper deck	Lower deck discharge	1 pc.	3055989
	K019	1 - 9999		20 mm	Hexagonal	30 mm	Infeed	Upper deck	Upper deck infeed	1 pc.	3057114
				20 mm	Hexagonal	30 mm	Discharge	Upper deck	Lower deck discharge	1 pc.	3057152
				20 mm	Hexagonal	35 mm	Infeed	Upper deck	Upper deck infeed	1 pc.	3057067
				20 mm	Hexagonal	35 mm	Discharge	Upper deck	Lower deck discharge	1 pc.	3057092
				20 mm	Hexagonal	40 mm	Infeed	Upper deck	Upper deck infeed	1 pc.	3057028
				20 mm	Hexagonal	40 mm	Discharge	Upper deck	Lower deck discharge	1 pc.	3057009
				20 mm	Hexagonal	50 mm	Discharge	Upper deck	Upper deck infeed	1 pc.	3056940
				20 mm	Hexagonal	50 mm	Infeed	Upper deck	Lower deck discharge	1 pc.	3056934
				20 mm	Hexagonal	60 mm	Infeed	Upper deck	Upper deck infeed	1 pc.	3056820
				20 mm	Hexagonal	60 mm	Discharge	Upper deck	Lower deck discharge	1 pc.	3056827

PERFORATED PLATES

Series code	Serial code	Series range	Special feature	Thickness	Aperture geometry	Clear mesh size	Section	Deck	Position	Requirement	Part no.
MR 110 EVO	K019	1 - 9999		20 mm	Hexagonal	70 mm	Discharge	Upper deck	Upper deck infeed	1 pc.	3056015
				20 mm	Hexagonal	70 mm	Infeed	Upper deck	Lower deck discharge	1 pc.	3055989
MR 122 PRO	K062	66 - 9999			Hexagonal	40 mm	Infeed	Upper deck	Upper deck infeed	1 pc.	WX3056120
				20 mm	Hexagonal	100 mm	Infeed	Upper deck	Upper deck infeed	1 pc.	3057895
				20 mm	Hexagonal	100 mm	Discharge	Upper deck	Lower deck discharge	1 pc.	3058206
				20 mm	Hexagonal	30 mm	Discharge	Upper deck	Lower deck discharge	1 pc.	3058005
					Hexagonal	30 mm	Infeed	Upper deck	Upper deck infeed	1 pc.	WX3056176
				20 mm	Hexagonal	40 mm	Discharge	Upper deck	Lower deck discharge	1 pc.	3058021
				20 mm	Hexagonal	50 mm	Infeed	Upper deck	Upper deck infeed	1 pc.	3056025
				20 mm	Hexagonal	50 mm	Discharge	Upper deck	Lower deck discharge	1 pc.	3058167
				20 mm	Hexagonal	60 mm	Infeed	Upper deck	Upper deck infeed	1 pc.	3056071
				20 mm	Hexagonal	60 mm	Discharge	Upper deck	Lower deck discharge	1 pc.	3058181
				20 mm	Hexagonal	70 mm	Discharge	Upper deck	Lower deck discharge	1 pc.	3057610

PERFORATED PLATES											
Series code	Serial code	Series range	Special feature	Thickness	Aperture geometry	Clear mesh size	Section	Deck	Position	Requirement	Part no.
MR 122 PRO	K062	66 - 9999		20 mm	Hexagonal	70 mm	Infeed	Upper deck	Upper deck infeed	1 pc.	3056106
				20 mm	Hexagonal	80 mm	Discharge	Upper deck	Lower deck discharge	1 pc.	2584084
				20 mm	Hexagonal	80 mm	Infeed	Upper deck	Upper deck infeed	1 pc.	2584154
MR 130 Z EVO	K024	70 - 299		20 mm	Hexagonal	50 mm	Infeed	Upper deck	Upper deck infeed	1 pc.	3056025
				20 mm	Hexagonal	60 mm	Infeed	Upper deck	Upper deck infeed	1 pc.	3056071
				20 mm	Hexagonal	80 mm	Infeed	Upper deck	Upper deck infeed	1 pc.	2584154
		301 - 9999		20 mm	Hexagonal	100 mm	Discharge	Upper deck	Lower deck discharge	1 pc.	3058206
				20 mm	Hexagonal	100 mm	Infeed	Upper deck	Upper deck infeed	1 pc.	3057895
				20 mm	Hexagonal	30 mm	Discharge	Upper deck	Lower deck discharge	1 pc.	3058005
				20 mm	Hexagonal	40 mm	Discharge	Upper deck	Lower deck discharge	1 pc.	3058021
				20 mm	Hexagonal	50 mm	Discharge	Upper deck	Lower deck discharge	1 pc.	3058167
				20 mm	Hexagonal	50 mm	Infeed	Upper deck	Upper deck infeed	1 pc.	3056025
				20 mm	Hexagonal	60 mm	Discharge	Upper deck	Lower deck discharge	1 pc.	3058181

PERFORATED PLATES

Series code	Serial code	Series range	Special feature	Thickness	Aperture geometry	Clear mesh size	Section	Deck	Position	Requirement	Part no.
MR 130 Z EVO	K024	301 - 9999		20 mm	Hexagonal	60 mm	Infeed	Upper deck	Upper deck infeed	1 pc.	3056071
				20 mm	Hexagonal	70 mm	Infeed	Upper deck	Upper deck infeed	1 pc.	3056106
				20 mm	Hexagonal	70 mm	Discharge	Upper deck	Lower deck discharge	1 pc.	3057610
				20 mm	Hexagonal	80 mm	Discharge	Upper deck	Lower deck discharge	1 pc.	2584084
				20 mm	Hexagonal	80 mm	Infeed	Upper deck	Upper deck infeed	1 pc.	2584154
MR 130 EVO	K077, K078	1 - 9999		20 mm	Hexagonal	25 mm	Discharge	Upper deck	Lower deck discharge	1 pc.	2947436
				20 mm	Hexagonal	25 mm	Infeed	Upper deck	Upper deck infeed	1 pc.	2947434
				20 mm	Hexagonal	30 mm	Infeed	Upper deck	Upper deck infeed	1 pc.	2957801
				20 mm	Hexagonal	30 mm	Discharge	Upper deck	Lower deck discharge	1 pc.	2957804
				20 mm	Hexagonal	35 mm	Discharge	Upper deck	Lower deck discharge	1 pc.	2959050
				20 mm	Hexagonal	35 mm	Infeed	Upper deck	Upper deck infeed	1 pc.	2959045
				20 mm	Hexagonal	40 mm	Infeed	Upper deck	Upper deck infeed	1 pc.	2959243
				20 mm	Hexagonal	40 mm	Discharge	Upper deck	Lower deck discharge	1 pc.	2959246

PERFORATED PLATES											
Series code	Serial code	Series range	Special feature	Thickness	Aperture geometry	Clear mesh size	Section	Deck	Position	Requirement	Part no.
MR 130 EVO	K077, K078	1 - 9999		20 mm	Hexagonal	50 mm	Discharge	Upper deck	Lower deck discharge	1 pc.	2959326
				20 mm	Hexagonal	50 mm	Infeed	Upper deck	Upper deck infeed	1 pc.	2959320
				20 mm	Hexagonal	60 mm	Infeed	Upper deck	Upper deck infeed	1 pc.	2959457
				20 mm	Hexagonal	60 mm	Discharge	Upper deck	Lower deck discharge	1 pc.	2959464
				20 mm	Hexagonal	65 mm	Discharge	Upper deck	Upper deck infeed	1 pc.	3080718
				20 mm	Hexagonal	70 mm	Infeed	Upper deck	Upper deck infeed	1 pc.	2959615
				20 mm	Hexagonal	70 mm	Discharge	Upper deck	Lower deck discharge	1 pc.	2959638
				20 mm	Hexagonal	90 mm	Discharge	Upper deck	Lower deck discharge	1 pc.	3048164
				20 mm	Hexagonal	90 mm	Infeed	Upper deck	Upper deck infeed	1 pc.	3048191
MSS 352 EVO	K067	223 - 9999		10 mm	Round	100 mm	Screening plant	Upper deck	Upper deck infeed	2 pc.	2530090
				10 mm	Hexagonal	45 mm	Screening plant	Upper deck	Upper deck infeed	2 pc.	2688452
				10 mm	Round	50 mm	Screening plant	Upper deck	Upper deck infeed	2 pc.	2530085
				10 mm	Round	60 mm	Screening plant	Upper deck	Upper deck infeed	2 pc.	2530087

PERFORATED PLATES

Series code	Serial code	Series range	Special feature	Thickness	Aperture geometry	Clear mesh size	Section	Deck	Position	Requirement	Part no.
MSS 352 EVO	K067	223 - 9999		10 mm	Round	70 mm	Screening plant	Upper deck	Upper deck infeed	2 pc.	2530088
				10 mm	Round	80 mm	Screening plant	Upper deck	Upper deck infeed	2 pc.	2530089
MSS 502 EVO	K066	1 - 9999		10 mm	Round	35 mm	Screening plant	Upper deck	Upper deck infeed	3 pc.	2653981
				10 mm	Hexagonal	40 mm	Screening plant	Upper deck	Upper deck infeed	3 pc.	2873493
				10 mm	Round	50 mm	Screening plant	Upper deck	Upper deck infeed	3 pc.	M20001566
				10 mm	Hexagonal	50 mm	Screening plant	Upper deck	Upper deck infeed	3 pc.	2913261
				10 mm	Hexagonal	60 mm	Screening plant	Upper deck	Upper deck infeed	3 pc.	M20001773
				10 mm	Hexagonal	65 mm	Screening plant	Upper deck	Upper deck infeed	3 pc.	2757585
				10 mm	Hexagonal	70 mm	Screening plant	Upper deck	Upper deck infeed	3 pc.	M20001594
				10 mm	Hexagonal	75 mm	Screening plant	Upper deck	Upper deck infeed	3 pc.	M20001664
				10 mm	Round	90 mm	Screening plant	Upper deck	Upper deck infeed	3 pc.	M20001503
MS 19 Z	K054	200 - 9999		8 mm	Round	100 mm	Screening plant	Upper deck	Upper deck infeed	4 pc.	3058597
				8 mm	Round	60 mm	Screening plant	Upper deck	Upper deck infeed	4 pc.	3058538

PERFORATED PLATES											
Series code	Serial code	Series range	Special feature	Thickness	Aperture geometry	Clear mesh size	Section	Deck	Position	Requirement	Part no.
MS 19 Z	K054	200 - 9999		8 mm	Round	80 mm	Screening plant	Upper deck	Upper deck infeed	4 pc.	3058571
MC 110 EVO	K116	1 - 9999	with cross-bar	20 mm	Hexagonal	30 mm	Feeding/ discharge	Upper deck	Upper deck infeed	1 pc.	2854442
			with cross-bar	20 mm	Hexagonal	35 mm	Feeding/ discharge	Upper deck	Upper deck infeed	1 pc.	2856489
			with cross-bar	20 mm	Hexagonal	40 mm	Feeding/ discharge	Upper deck	Upper deck infeed	1 pc.	2856668
			with cross-bar	20 mm	Hexagonal	45 mm	Feeding/ discharge	Upper deck	Upper deck infeed	1 pc.	2857239
			with cross-bar	20 mm	Hexagonal	50 mm	Feeding/ discharge	Upper deck	Feeding/ discharge, upper deck	1 pc.	2857566
			with cross-bar	20 mm	Hexagonal	60 mm	Feeding/ discharge	Upper deck	Upper deck infeed	1 pc.	2857740
			with cross-bar	20 mm	Hexagonal	70 mm	Feeding/ discharge	Upper deck	Upper deck infeed	1 pc.	2858101
			with cross-bar	20 mm	Hexagonal	80 mm	Feeding/ discharge	Upper deck	Upper deck infeed	1 pc.	2858604
MSS 802 EVO	K082	10 - 9999		8 mm	Round	100 mm	Screening plant	Upper deck	Upper deck infeed	4 pc.	3058597
				8 mm	Hexagonal	45 mm	Screening plant	Upper deck	Upper deck infeed	4 pc.	2841880
				8 mm	Round	60 mm	Screening plant	Upper deck	Upper deck infeed	4 pc.	3058538

PERFORATED PLATES

Series code	Serial code	Series range	Special feature	Thickness	Aperture geometry	Clear mesh size	Section	Deck	Position	Requirement	Part no.
MSS 802 EVO	K082	10 - 9999		8 mm	Round	80 mm	Screening plant	Upper deck	Upper deck infeed	4 pc.	3058571
MR 122i PRO	K031	1 - 9999			Hexagonal	40 mm	Infeed	Upper deck	Upper deck infeed	1 pc.	WX3056120
				20 mm	Hexagonal	100 mm	Discharge	Upper deck	Lower deck discharge	1 pc.	3058206
				20 mm	Hexagonal	100 mm	Infeed	Upper deck	Upper deck infeed	1 pc.	3057895
					Hexagonal	30 mm	Infeed	Upper deck	Upper deck infeed	1 pc.	WX3056176
				20 mm	Hexagonal	30 mm	Discharge	Upper deck	Lower deck discharge	1 pc.	3058005
				20 mm	Hexagonal	40 mm	Discharge	Upper deck	Lower deck discharge	1 pc.	3058021
				20 mm	Hexagonal	50 mm	Infeed	Upper deck	Upper deck infeed	1 pc.	3056025
				20 mm	Hexagonal	50 mm	Discharge	Upper deck	Lower deck discharge	1 pc.	3058167
				20 mm	Hexagonal	60 mm	Discharge	Upper deck	Lower deck discharge	1 pc.	3058181
				20 mm	Hexagonal	60 mm	Infeed	Upper deck	Upper deck infeed	1 pc.	3056071
				20 mm	Hexagonal	70 mm	Discharge	Upper deck	Lower deck discharge	1 pc.	3057610
				20 mm	Hexagonal	70 mm	Infeed	Upper deck	Upper deck infeed	1 pc.	3056106

PERFORATED PLATES											
Series code	Serial code	Series range	Special feature	Thickness	Aperture geometry	Clear mesh size	Section	Deck	Position	Requirement	Part no.
MR 122i PRO	K031	1 - 9999		20 mm	Hexagonal	80 mm	Discharge	Upper deck	Lower deck discharge	1 pc.	2584084
				20 mm	Hexagonal	80 mm	Infeed	Upper deck	Upper deck infeed	1 pc.	2584154
MR 130 PRO	K125	1 - 9999		20 mm	Hexagonal	30 mm	Discharge	Upper deck	Lower deck discharge	1 pc.	2957804
				20 mm	Hexagonal	30 mm	Infeed	Upper deck	Upper deck infeed	1 pc.	2957801
				20 mm	Hexagonal	35 mm	Infeed	Upper deck	Upper deck infeed	1 pc.	2959045
				20 mm	Hexagonal	35 mm	Discharge	Upper deck	Lower deck discharge	1 pc.	2959050
				20 mm	Hexagonal	40 mm	Infeed	Upper deck	Upper deck infeed	1 pc.	2959243
				20 mm	Hexagonal	40 mm	Discharge	Upper deck	Lower deck discharge	1 pc.	2959246
				20 mm	Hexagonal	50 mm	Infeed	Upper deck	Upper deck infeed	1 pc.	2959320
				20 mm	Hexagonal	50 mm	Discharge	Upper deck	Lower deck discharge	1 pc.	2959326
				20 mm	Hexagonal	60 mm	Infeed	Upper deck	Upper deck infeed	1 pc.	2959457
				20 mm	Hexagonal	60 mm	Discharge	Upper deck	Lower deck discharge	1 pc.	2959464
				20 mm	Hexagonal	70 mm	Infeed	Upper deck	Upper deck infeed	1 pc.	2959615

PERFORATED PLATES

Series code	Serial code	Series range	Special feature	Thickness	Aperture geometry	Clear mesh size	Section	Deck	Position	Requirement	Part no.
MR 130 PRO	K125	1 - 9999		20 mm	Hexagonal	70 mm	Discharge	Upper deck	Lower deck discharge	1 pc.	2959638
	K124	1 - 9999		20 mm	Hexagonal	30 mm	Infeed	Upper deck	Upper deck infeed	1 pc.	2957801
				20 mm	Hexagonal	30 mm	Discharge	Upper deck	Lower deck discharge	1 pc.	2957804
				20 mm	Hexagonal	35 mm	Infeed	Upper deck	Upper deck infeed	1 pc.	2959045
				20 mm	Hexagonal	35 mm	Discharge	Upper deck	Lower deck discharge	1 pc.	2959050
				20 mm	Hexagonal	40 mm	Infeed	Upper deck	Upper deck infeed	1 pc.	2959243
				20 mm	Hexagonal	40 mm	Discharge	Upper deck	Lower deck discharge	1 pc.	2959246
				20 mm	Hexagonal	50 mm	Infeed	Upper deck	Upper deck infeed	1 pc.	2959320
				20 mm	Hexagonal	50 mm	Discharge	Upper deck	Lower deck discharge	1 pc.	2959326
				20 mm	Hexagonal	60 mm	Infeed	Upper deck	Upper deck infeed	1 pc.	2959457
				20 mm	Hexagonal	60 mm	Discharge	Upper deck	Lower deck discharge	1 pc.	2959464
				20 mm	Hexagonal	70 mm	Infeed	Upper deck	Upper deck infeed	1 pc.	2959615
				20 mm	Hexagonal	70 mm	Discharge	Upper deck	Lower deck discharge	1 pc.	2959638

PERFORATED PLATES											
Series code	Serial code	Series range	Special feature	Thickness	Aperture geometry	Clear mesh size	Section	Deck	Position	Requirement	Part no.
MS 15 Z	K047	1 - 9999		10 mm	Hexagonal	30 mm	Screening plant	Upper deck	Upper deck infeed	4 pc.	2548433
					Hexagonal	50 mm	Screening plant	Upper deck	Upper deck infeed	4 pc.	2567379
				10 mm	Round	60 mm	Screening plant	Upper deck	Upper deck infeed	4 pc.	M20001520
		10 - 9999		10 mm	Hexagonal	100 mm	Screening plant	Upper deck	Upper deck infeed	4 pc.	2548434
				10 mm	Hexagonal	80 mm	Screening plant	Upper deck	Upper deck infeed	4 pc.	2501395
MC 110 EVO	K117	1 - 9999	with cross-bar	20 mm	Hexagonal	30 mm	Feeding/ discharge	Upper deck	Upper deck infeed	1 pc.	2854442
				20 mm	Hexagonal	30 mm	Infeed	Upper deck	Lower deck discharge	1 pc.	2957801
			with cross-bar	20 mm	Hexagonal	35 mm	Feeding/ discharge	Upper deck	Upper deck infeed	1 pc.	2856489
			with cross-bar	20 mm	Hexagonal	40 mm	Feeding/ discharge	Upper deck	Upper deck infeed	1 pc.	2856668
			with cross-bar	20 mm	Hexagonal	45 mm	Feeding/ discharge	Upper deck	Upper deck infeed	1 pc.	2857239
			with cross-bar	20 mm	Hexagonal	50 mm	Feeding/ discharge	Upper deck	Feeding/ discharge, upper deck	1 pc.	2857566
			with cross-bar	20 mm	Hexagonal	60 mm	Feeding/ discharge	Upper deck	Upper deck infeed	1 pc.	2857740

PERFORATED PLATES

Series code	Serial code	Series range	Special feature	Thickness	Aperture geometry	Clear mesh size	Section	Deck	Position	Requirement	Part no.
MC 110 EVO	K117	1 - 9999	with cross-bar	20 mm	Hexagonal	70 mm	Feeding/ discharge	Upper deck	Upper deck infeed	1 pc.	2858101
				20 mm	Hexagonal	70 mm	Discharge	Upper deck	Lower deck discharge	1 pc.	2959638
			with cross-bar	20 mm	Hexagonal	80 mm	Feeding/ discharge	Upper deck	Upper deck infeed	1 pc.	2858604
MR 100 NEO	K136			20 mm	Hexagonal	30 mm	Feeding/ discharge	Upper deck	Feeding/ discharge, upper deck	2 pc.	WX3196697
		1 - 9999		20 mm	Hexagonal	35 mm	Feeding/ discharge	Upper deck	Feeding/ discharge, upper deck	2 pc.	WX3196545
				20 mm	Hexagonal	40 mm	Feeding/ discharge	Upper deck	Feeding/ discharge, upper deck	2 pc.	WX3196793
				20 mm	Hexagonal	50 mm	Feeding/ discharge	Upper deck	Feeding/ discharge, upper deck	2 pc.	WX3196858
				20 mm	Hexagonal	55 mm	Feeding/ discharge	Upper deck	Feeding/ discharge, upper deck	2 pc.	WX3196876

PERFORATED PLATES											
Series code	Serial code	Series range	Special feature	Thickness	Aperture geometry	Clear mesh size	Section	Deck	Position	Requirement	Part no.
MR 100 NEO	K136			20 mm	Hexagonal	60 mm	Feeding/discharge	Upper deck	Feeding/discharge, upper deck	2 pc.	WX3196886
MR 100 NEOe	K138			20 mm	Hexagonal	30 mm	Feeding/discharge	Upper deck	Feeding/discharge, upper deck	2 pc.	WX3196697
				20 mm	Hexagonal	35 mm	Feeding/discharge	Upper deck	Feeding/discharge, upper deck	2 pc.	WX3196545
				20 mm	Hexagonal	40 mm	Feeding/discharge	Upper deck	Feeding/discharge, upper deck	2 pc.	WX3196793
				20 mm	Hexagonal	50 mm	Feeding/discharge	Upper deck	Feeding/discharge, upper deck	2 pc.	WX3196858
				20 mm	Hexagonal	55 mm	Feeding/discharge	Upper deck	Feeding/discharge, upper deck	2 pc.	WX3196876

PERFORATED PLATES

Series code	Serial code	Series range	Special feature	Thickness	Aperture geometry	Clear mesh size	Section	Deck	Position	Requirement	Part no.
MR 100 NEOe	K138			20 mm	Hexagonal	60 mm	Feeding/discharge	Upper deck	Feeding/discharge, upper deck	2 pc.	WX3196886
MR 100 NEO	K135			20 mm	Hexagonal	30 mm	Feeding/discharge				WX3196697
				20 mm	Hexagonal	35 mm	Feeding/discharge				WX3196545
				20 mm	Hexagonal	40 mm	Feeding/discharge				WX3196793
				20 mm	Hexagonal	50 mm	Feeding/discharge				WX3196858
				20 mm	Hexagonal	55 mm	Feeding/discharge				WX3196876
				20 mm	Hexagonal	60 mm	Feeding/discharge				WX3196886
MR 100 NEOe	K137			20 mm	Hexagonal	30 mm	Feeding/discharge				WX3196697
				20 mm	Hexagonal	35 mm	Feeding/discharge				WX3196545
				20 mm	Hexagonal	40 mm	Feeding/discharge				WX3196793
				20 mm	Hexagonal	50 mm	Feeding/discharge				WX3196858
				20 mm	Hexagonal	55 mm	Feeding/discharge				WX3196876

PERFORATED PLATES

Series code	Serial code	Series range	Special feature	Thickness	Aperture geometry	Clear mesh size	Section	Deck	Position	Requirement	Part no.
MR 100 NEOe	K137			20 mm	Hexagonal	60 mm	Feeding/ discharge				WX3196886

SLOTTED GRATES

Genuine KLEEMANN slotted grates are used for sticky and extremely coarse material entering the machine that is difficult to screen.

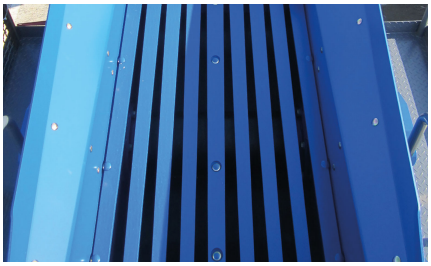

SLOTTED GRATES

Series code	Serial code	Series range	Gap width	Deck	Part no.
MC 100 R	K001	1 - 9999	32 mm	Upper deck	F20007487
			50 mm	Upper deck	F10350432
			60 mm	Upper deck	F20004901
			90 mm	Upper deck	F10578302
MC 100 EVO	K002, K011	1 - 9999	40 mm	Upper deck	2339535
			50 mm	Upper deck	2339536
			60 mm	Upper deck	2339538
MC 110 R EVO	K005	1 - 9999	45 mm	Upper deck	2298411
			55 mm	Upper deck	2298412
			65 mm	Upper deck	2298413
MC 110 Ri EVO	K014	1 - 9999	45 mm	Upper deck	2298411
			55 mm	Upper deck	2298412
			65 mm	Upper deck	2298413
MC 110 Z	K004	1 - 9999	45 mm	Upper deck	F20003570

SLOTTED GRATES

Series code	Serial code	Series range	Gap width	Deck	Part no.
MC 110 Z	K004	1 - 9999	55 mm	Upper deck	F20003701
			65 mm	Upper deck	F20017141
			70 mm	Upper deck	F20006593
MC 110 Z EVO	K006	1 - 9999	45 mm	Upper deck	2298411
			55 mm	Upper deck	2298412
			65 mm	Upper deck	2298413
MC 110 R	K003	1 - 9999	40 mm	Upper deck	2234419
			50 mm	Upper deck	F20009648
MC 110 Zi EVO	K015	1 - 9999	45 mm	Upper deck	2298411
			55 mm	Upper deck	2298412
			65 mm	Upper deck	2298413
MC 120 Z	K007	1 - 9999	45 mm	Upper deck	F20017519
			65 mm	Upper deck	F20007126
			75 mm	Upper deck	F20017522
			85 mm	Upper deck	F20017086
			90 mm	Upper deck	F20000021
MC 120 PRO	K034	1 - 13	55 mm	Upper deck	2577900
			65 mm	Upper deck	2577780
			75 mm	Upper deck	2575901
			85 mm	Upper deck	2527098
		14 - 9999	55 mm	Upper deck	2611642
			65 mm	Upper deck	2610502
			75 mm	Upper deck	2622034
			85 mm	Upper deck	2610000
	K035	1 - 1	55 mm	Upper deck	2577900
			65 mm	Upper deck	2577780

SLOTTED GRATES					
Series code	Serial code	Series range	Gap width	Deck	Part no.
MC 120 PRO	K035	1 - 1	75 mm	Upper deck	2575901
			85 mm	Upper deck	2527098
		2 - 9999	55 mm	Upper deck	2611642
			65 mm	Upper deck	2610502
			75 mm	Upper deck	2622034
			85 mm	Upper deck	2610000
MR 100 Z	K013	10 - 9999	45 mm	Upper deck	F10410151
MR 110 R EVO	K016	1 - 9999	50 mm	Upper deck	F20009648
MR 110 Z EVO	K017	2 - 9999	45 mm	Upper deck	F20003570
			55 mm	Upper deck	F20003701
			65 mm	Upper deck	F20017141
MR 110 EVO	K018, K019	1 - 9999	45 mm	Upper deck	2332229
			55 mm	Upper deck	2332262
			65 mm	Upper deck	2332315
			75 mm	Upper deck	2332183
MR 122 PRO	K062	1 - 9999	45 mm	Upper deck	F20018433
			55 mm	Upper deck	F20018405
			70 mm	Upper deck	F20018497
MR 130 R EVO	K023	200 - 9999	50 mm	Upper deck	F20017616
MR 130 Z EVO	K024	1 - 299	45 mm	Upper deck	F20018433
			55 mm	Upper deck	F20018405
			70 mm	Upper deck	F20018497
		301 - 9999	45 mm	Upper deck	F20011673
			55 mm	Upper deck	F20011381
			65 mm	Upper deck	F20011677
MR 130 EVO	K077, K078	1 - 9999	35 mm	Upper deck	2456989

SLOTTED GRATES

Series code	Serial code	Series range	Gap width	Deck	Part no.
MR 130 EVO	K077, K078	1 - 9999	45 mm	Upper deck	2298473
			55 mm	Upper deck	2295997
			65 mm	Upper deck	2341036
MSS 502 EVO	K066	1 - 9999	75 mm	Upper deck	2774614
MSS 1102 PRO	K076	1 - 9999	150 mm	Upper deck	2973353
			75 mm	Upper deck	2479052
MC 110 EVO	K116	1 - 9999	45 mm	Upper deck	2298411
			55 mm	Upper deck	2298412
			65 mm	Upper deck	2298413
MSS 802 EVO	K082	10 - 9999	100 mm	Upper deck	2763361
			125 mm	Upper deck	2776896
			125 mm	Upper deck	2776847
MR 122i PRO	K031	1 - 9999	45 mm	Upper deck	F20018433
			55 mm	Upper deck	F20018405
MR 130 PRO	K125, K124	1 - 9999	35 mm	Upper deck	2947024
			45 mm	Upper deck	2858238
			55 mm	Upper deck	2946181
			65 mm	Upper deck	2946558
MS 15 Z	K047	1 - 9999	100 mm	Upper deck	M10025587
			125 mm	Upper deck	M10025588
			75 mm	Upper deck	M10024206
MSS 802 EVO	K102	10 - 9999	100 mm	Upper deck	2763361
			125 mm	Upper deck	2776896
			125 mm	Upper deck	2776847
MC 110 EVO	K117	1 - 9999	45 mm	Upper deck	2298411
			55 mm	Upper deck	2298412

SLOTTED GRATES					
Series code	Serial code	Series range	Gap width	Deck	Part no.
MC 110 EVO	K117	1 - 9999	65 mm	Upper deck	2298413
MR 100 NEO	K136		25 mm	Upper deck	3099047
			35 mm	Upper deck	WX3193396
		1 - 9999	45 mm	Upper deck	3026237
			55 mm	Upper deck	WX3189379
MR 100 NEOe	K138		25 mm	Upper deck	3099047
			35 mm	Upper deck	WX3193396
			45 mm	Upper deck	3026237
			55 mm	Upper deck	WX3189379

VIBRATING GRATES

With the help of genuine KLEEMANN vibrating grates, coarse materials can be screened out in advance and the plant can be fed with material of a defined grain size.

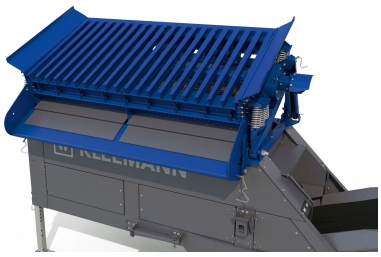

VIBRATING GRATES										
Series code	Serial code	Series range	Part	Clear mesh size	Gap width	Deck	Position	Wire dia-meter	Re-quire-ment	Part no.
MSC 702 EVO	K083	1 - 9999	QM-GRADE 32 rect-angular mesh	32 mm		Lower deck		8 mm	2 pc.	2447828
			QM-GRADE 55 rect-angular mesh	55 mm		Lower deck		10 mm	2 pc.	2447834
			QM-GRADE 60 rect-angular mesh	60 mm		Lower deck		10 mm	2 pc.	2447838
			QM-GRADE 70 rect-angular mesh	70 mm		Lower deck		10 mm	2 pc.	2447841
			QM-GRADE 90 rect-angular mesh	90 mm		Lower deck		12 mm	2 pc.	2447842
		10 - 39	SG-GRADE 100 slot-ted grate		100 mm	Upper deck	left		1 pc.	2410844
					100 mm	Upper deck	right		1 pc.	2410896

VIBRATING GRATES										
Series code	Serial code	Series range	Part	Clear mesh size	Gap width	Deck	Position	Wire dia-meter	Re-quire-ment	Part no.
MSC 702 EVO	K083	10 - 39	SG-GRADE 150 slot-ted grate		150 mm	Upper deck	left		1 pc.	2411448
					150 mm	Upper deck	right		1 pc.	2413303
		40 - 9999	SG-GRADE 100 slot-ted grate		100 mm	Upper deck	left		1 pc.	2492215
					100 mm	Upper deck	right		1 pc.	2492216
MSC 702i EVO	K103	1 - 9999	QM-GRADE 32 rect-angular mesh	32 mm		Lower deck		8 mm	2 pc.	2447828
			QM-GRADE 55 rect-angular mesh	55 mm		Lower deck		10 mm	2 pc.	2447834
			QM-GRADE 60 rect-angular mesh	60 mm		Lower deck		10 mm	2 pc.	2447838
			QM-GRADE 70 rect-angular mesh	70 mm		Lower deck		10 mm	2 pc.	2447841
			QM-GRADE 90 rect-angular mesh	90 mm		Lower deck		12 mm	2 pc.	2447842
		10 - 15	SG-GRADE 100 slot-ted grate		100 mm	Upper deck	left		1 pc.	2410844
					100 mm	Upper deck	right		1 pc.	2410896

VIBRATING GRATES

Series code	Serial code	Series range	Part	Clear mesh size	Gap width	Deck	Position	Wire dia-meter	Re-quire-ment	Part no.
MSC 702i EVO	K103	10 - 15	SG-GRADE 150 slot-ted grate		150 mm	Upper deck	left		1 pc.	2411448
					150 mm	Upper deck	right		1 pc.	2413303
		16 - 9999	SG-GRADE 100 slot-ted grate		100 mm	Upper deck	left		1 pc.	2492215
					100 mm	Upper deck	right		1 pc.	2492216
MSC 703 EVO	K084	1 - 9999	QM-GRADE 32 rect-angular mesh	32 mm		Lower deck		8 mm	2 pc.	2447828
			QM-GRADE 55 rect-angular mesh	55 mm		Lower deck		10 mm	2 pc.	2447834
			QM-GRADE 60 rect-angular mesh	60 mm		Lower deck		10 mm	2 pc.	2447838
			QM-GRADE 70 rect-angular mesh	70 mm		Lower deck		10 mm	2 pc.	2447841
			QM-GRADE 90 rect-angular mesh	90 mm		Lower deck		12 mm	2 pc.	2447842
		10 - 53	SG-GRADE 100 slot-ted grate		100 mm	Upper deck	left		1 pc.	2410844
					100 mm	Upper deck	right		1 pc.	2410896

VIBRATING GRATES										
Series code	Serial code	Series range	Part	Clear mesh size	Gap width	Deck	Position	Wire dia-meter	Re-quire-ment	Part no.
MSC 703 EVO	K084	10 - 53	SG-GRADE 150 slot-ted grate		150 mm	Upper deck	left		1 pc.	2411448
					150 mm	Upper deck	right		1 pc.	2413303
		54 - 9999	SG-GRADE 100 slot-ted grate		100 mm	Upper deck	left		1 pc.	2492215
					100 mm	Upper deck	right		1 pc.	2492216
MSC 703i EVO	K104	1 - 9999	QM-GRADE 32 rect-angular mesh	32 mm		Lower deck		8 mm	2 pc.	2447828
			QM-GRADE 55 rect-angular mesh	55 mm		Lower deck		10 mm	2 pc.	2447834
			QM-GRADE 60 rect-angular mesh	60 mm		Lower deck		10 mm	2 pc.	2447838
			QM-GRADE 70 rect-angular mesh	70 mm		Lower deck		10 mm	2 pc.	2447841
			QM-GRADE 90 rect-angular mesh	90 mm		Lower deck		12 mm	2 pc.	2447842
		10 - 14	SG-GRADE 100 slot-ted grate		100 mm	Upper deck	left		1 pc.	2410844
					100 mm	Upper deck	right		1 pc.	2410896

VIBRATING GRATES

Series code	Serial code	Series range	Part	Clear mesh size	Gap width	Deck	Position	Wire dia-meter	Re-quire-ment	Part no.
MSC 703i EVO	K104	10 - 14	SG-GRADE 150 slot-ted grate		150 mm	Upper deck	left		1 pc.	2411448
					150 mm	Upper deck	right		1 pc.	2413303
		15 - 9999	SG-GRADE 100 slot-ted grate		100 mm	Upper deck	left		1 pc.	2492215
					100 mm	Upper deck	right		1 pc.	2492216
MSC 952 EVO	K085	1 - 9999	QM-GRADE 32 rect-angular mesh	32 mm		Lower deck		8 mm	2 pc.	2447828
			QM-GRADE 55 rect-angular mesh	55 mm		Lower deck		10 mm	2 pc.	2447834
			QM-GRADE 60 rect-angular mesh	60 mm		Lower deck		10 mm	2 pc.	2447838
			QM-GRADE 70 rect-angular mesh	70 mm		Lower deck		10 mm	2 pc.	2447841
			QM-GRADE 90 rect-angular mesh	90 mm		Lower deck		12 mm	2 pc.	2447842
		10 - 27	SG-GRADE 100 slot-ted grate		100 mm	Upper deck	left		1 pc.	2410844
					100 mm	Upper deck	right		1 pc.	2410896

VIBRATING GRATES										
Series code	Serial code	Series range	Part	Clear mesh size	Gap width	Deck	Position	Wire dia-meter	Re-quire-ment	Part no.
MSC 952 EVO	K085	10 - 27	SG-GRADE 150 slot-ted grate		150 mm	Upper deck	left		1 pc.	2411448
					150 mm	Upper deck	right		1 pc.	2413303
		28 - 9999	SG-GRADE 100 slot-ted grate		100 mm	Upper deck	left		1 pc.	2492215
					100 mm	Upper deck	right		1 pc.	2492216
MSC 952i EVO	K105	1 - 9999	QM-GRADE 32 rect-angular mesh	32 mm		Lower deck		8 mm	2 pc.	2447828
			QM-GRADE 55 rect-angular mesh	55 mm		Lower deck		10 mm	2 pc.	2447834
			QM-GRADE 60 rect-angular mesh	60 mm		Lower deck		10 mm	2 pc.	2447838
			QM-GRADE 70 rect-angular mesh	70 mm		Lower deck		10 mm	2 pc.	2447841
			QM-GRADE 90 rect-angular mesh	90 mm		Lower deck		12 mm	2 pc.	2447842
		10 - 16	SG-GRADE 100 slot-ted grate		100 mm	Upper deck	left		1 pc.	2410844
					100 mm	Upper deck	right		1 pc.	2410896

VIBRATING GRATES

Series code	Serial code	Series range	Part	Clear mesh size	Gap width	Deck	Position	Wire dia-meter	Re-quire-ment	Part no.
MSC 952i EVO	K105	10 - 16	SG-GRADE 150 slot-ted grate		150 mm	Upper deck	left		1 pc.	2411448
					150 mm	Upper deck	right		1 pc.	2413303
		17 - 9999	SG-GRADE 100 slot-ted grate		100 mm	Upper deck	left		1 pc.	2492215
					100 mm	Upper deck	right		1 pc.	2492216
MSC 953 EVO	K086	1 - 9999	QM-GRADE 32 rect-angular mesh	32 mm		Lower deck		8 mm	2 pc.	2447828
			QM-GRADE 55 rect-angular mesh	55 mm		Lower deck		10 mm	2 pc.	2447834
			QM-GRADE 60 rect-angular mesh	60 mm		Lower deck		10 mm	2 pc.	2447838
			QM-GRADE 70 rect-angular mesh	70 mm		Lower deck		10 mm	2 pc.	2447841
			QM-GRADE 90 rect-angular mesh	90 mm		Lower deck		12 mm	2 pc.	2447842
		10 - 85	SG-GRADE 100 slot-ted grate		100 mm	Upper deck	left		1 pc.	2410844
					100 mm	Upper deck	right		1 pc.	2410896

VIBRATING GRATES										
Series code	Serial code	Series range	Part	Clear mesh size	Gap width	Deck	Position	Wire dia-meter	Re-quire-ment	Part no.
MSC 953 EVO	K086	10 - 85	SG-GRADE 150 slot-ted grate		150 mm	Upper deck	left		1 pc.	2411448
					150 mm	Upper deck	right		1 pc.	2413303
		86 - 9999	SG-GRADE 100 slot-ted grate		100 mm	Upper deck	left		1 pc.	2492215
					100 mm	Upper deck	right		1 pc.	2492216
MSC 953i EVO	K106	1 - 9999	QM-GRADE 32 rect-angular mesh	32 mm		Lower deck		8 mm	2 pc.	2447828
			QM-GRADE 55 rect-angular mesh	55 mm		Lower deck		10 mm	2 pc.	2447834
			QM-GRADE 60 rect-angular mesh	60 mm		Lower deck		10 mm	2 pc.	2447838
			QM-GRADE 70 rect-angular mesh	70 mm		Lower deck		10 mm	2 pc.	2447841
			QM-GRADE 90 rect-angular mesh	90 mm		Lower deck		12 mm	2 pc.	2447842
		10 - 24	SG-GRADE 100 slot-ted grate		100 mm	Upper deck	left		1 pc.	2410844
					100 mm	Upper deck	right		1 pc.	2410896

VIBRATING GRATES										
Series code	Serial code	Series range	Part	Clear mesh size	Gap width	Deck	Position	Wire dia-meter	Re-quire-ment	Part no.
MSC 953i EVO	K106	10 - 24	SG-GRADE 150 slot-ted grate		150 mm	Upper deck	left		1 pc.	2411448
					150 mm	Upper deck	right		1 pc.	2413303
		25 - 9999	SG-GRADE 100 slot-ted grate		100 mm	Upper deck	left		1 pc.	2492215
					100 mm	Upper deck	right		1 pc.	2492216

Original KLEEMANN

MAINTENANCE PARTS

Filling or lubricating your machine with a lubricant specially tailored to the application has a significant impact on the service life of the active parts in combustion engines, hydraulic components, gearboxes and bearings. WIRTGEN GROUP lubricants are optimised for your machine and therefore meet these special requirements perfectly. Combined with WIRTGEN GROUP filter sets and maintenance packages, our lubricants are the best choice to maintain the performance of your machine and permanently reduce maintenance costs.

> Read more online

FILTER SETS

WIRTGEN GROUP filter systems, which are designed to be perfectly compatible with our lubricants and operating agents, ensure that the systems remain clean and prevent damage to components, thus maximising the service life of your machines. The filter packages contain the engine and hydraulic filters required based on the machine type's respective replacement interval. In order to ensure that the machine performs at its best, we recommend that you adhere to the specified replacement intervals.

FILTER SETS

Series code	Serial code	Series range	Type	Application	Requirement	Motor	Exhaust emission standard	Subassembly	Installation location	Part no.
MC 100 R	K001	35 - 222	Motor	Service packages | Diesel engine	1 pc.	**Replacement interval** 500 h	SCANIA - TIER 2 - STAGE II	Service packages	Drive unit - engine	2270747
			Motor	Service packages | Diesel engine	1 pc.	**First service | Replacement interval** 500 h | 2000 h	SCANIA - TIER 2 - STAGE II	Service packages	Drive unit - engine	2270754
		35 - 9999	Hydraulics	Service packages | Hydraulics	1 pc.	**First service | Replacement interval** 500 h | 1000 h	SCANIA - TIER 2 - STAGE II; SCANIA - TIER 3 - STAGE IIIA; SCANIA - LRC	Service packages	Hydraulic system	F10615349
		223 - 9999	Motor	Service packages | Diesel engine	1 pc.	**First service | Replacement interval** 500 h | 2000 h	SCANIA - TIER 3 - STAGE IIIA	Service packages	Drive unit - engine	2270762

MAINTENANCE PARTS

FILTER SETS										
Series code	Serial code	Series range	Type	Application	Requirement	Motor	Exhaust emission standard	Subassembly	Installation location	Part no.
MC 100 R	K001	223 - 9999	Motor	Service packages | Diesel engine	1 pc.	**Replacement interval** 500 h	SCANIA - TIER 3 - STAGE IIIA	Service packages	Drive unit - engine	2270763
		239 - 242	Motor	Service packages | Diesel engine	1 pc.	**Replacement interval** 500 h	SCANIA - LRC	Service packages	Drive unit - engine	2403244
			Motor	Service packages | Diesel engine	1 pc.	**First service | Replacement interval** 500 h | 2000 h	SCANIA - LRC	Service packages	Drive unit - engine	2403248
MC 100 EVO	K002	1 - 9999	Motor	Service packages | Diesel engine	1 pc.	**Replacement interval** 500 h	DEUTZ - TIER 3 - STAGE IIIA	Service packages	Drive unit - engine	2396000
			Motor	Service packages | Diesel engine	1 pc.	**First service | Replacement interval** 500 h | 2000 h	DEUTZ - TIER 3 - STAGE IIIA	Service packages	Drive unit - engine	2396001
			Hydraulics	Service packages | Hydraulics	1 pc.	**First service | Replacement interval** 500 h | 2000 h	DEUTZ - TIER 3 - STAGE IIIA	Service packages	Hydraulic system	2330204
			Hydraulics	Service packages | Hydraulics	1 pc.	**Replacement interval** 1000 h	DEUTZ - TIER 3 - STAGE IIIA	Service packages	Hydraulic system	2330206

FILTER SETS

Series code	Serial code	Series range	Type	Application	Requirement	Motor	Exhaust emission standard	Subassembly	Installation location	Part no.
MC 100 EVO	K011	1 - 9999	Motor	Service packages | Diesel engine	1 pc.	**First service | Replacement interval** 500 h | 2000 h	DEUTZ - TIER 4F - STAGE IV; DEUTZ - STAGE V	Service packages	Drive unit - engine	2407888
			Motor	Service packages | Diesel engine	1 pc.	**Replacement interval** 500 h	DEUTZ - TIER 4F - STAGE IV; DEUTZ - STAGE V	Service packages	Drive unit - engine	2407887
			Hydraulics	Service packages | Hydraulics	1 pc.	**Replacement interval** 1000 h	DEUTZ - TIER 4F - STAGE IV; DEUTZ - STAGE V	Service packages	Hydraulic system	2330206
			Hydraulics	Service packages | Hydraulics	1 pc.	**First service | Replacement interval** 500 h | 2000 h	DEUTZ - TIER 4F - STAGE IV; DEUTZ - STAGE V	Service packages	Hydraulic system	2330204
MC 110 R EVO	K005	1 - 9999	Motor	Service packages | Diesel engine	1 pc.	**Replacement interval** 500 h	SCANIA - TIER 3 - STAGE IIIA; SCANIA - LRC	Service packages	Drive unit - engine	2270763
			Motor	Service packages | Diesel engine	1 pc.	**Replacement interval** 500 h	SCANIA - LRC; SCANIA - TIER 3 - STAGE IIIA	Service packages	Drive unit - engine	2403244

Due to possible technical changes, always refer to the information in the instruction manual.

MAINTENANCE PARTS

FILTER SETS

Series code	Serial code	Series range	Type	Application	Requirement	Motor	Exhaust emission standard	Subassembly	Installation location	Part no.
MC 110 R EVO	K005	1 - 9999	Motor	Service packages | Diesel engine	1 pc.	**First service | Replacement interval** 500 h | 2000 h	SCANIA - LRC; SCANIA - TIER 3 - STAGE IIIA	Service packages	Drive unit - engine	2403247
			Motor	Service packages | Diesel engine	1 pc.	**First service | Replacement interval** 500 h | 2000 h	SCANIA - TIER 3 - STAGE IIIA; SCANIA - LRC	Service packages	Drive unit - engine	2270762
			Hydraulics	Service packages | Hydraulics	1 pc.	**Replacement interval** 1000 h	SCANIA - TIER 3 - STAGE IIIA; SCANIA - LRC	Service packages	Hydraulic system	2330206
			Hydraulics	Service packages | Hydraulics	1 pc.	**First service | Replacement interval** 500 h | 2000 h	SCANIA - TIER 3 - STAGE IIIA; SCANIA - LRC	Service packages	Hydraulic system	2330204
MC 110 Ri EVO	K014	1 - 9999	Motor	Service packages | Diesel engine	1 pc.	**First service | Replacement interval** 500 h | 2000 h	SCANIA - TIER 4F - STAGE IV; SCANIA - STAGE V	Service packages	Drive unit - engine	2382644
			Motor	Service packages | Diesel engine	1 pc.	**Replacement interval** 500 h	SCANIA - TIER 4F - STAGE IV; SCANIA - STAGE V	Service packages	Drive unit - engine	2562262

FILTER SETS

Series code	Serial code	Series range	Type	Application	Requirement	Motor	Exhaust emission standard	Subassembly	Installation location	Part no.
MC 110 Ri EVO	K014	1 - 9999	Hydraulics	Service packages | Hydraulics	1 pc.	**First service | Replacement interval** 500 h | 2000 h	SCANIA - TIER 4F - STAGE IV; SCANIA - STAGE V	Service packages	Hydraulic system	2330204
			Hydraulics	Service packages | Hydraulics	1 pc.	**Replacement interval** 1000 h	SCANIA - TIER 4F - STAGE IV; SCANIA - STAGE V	Service packages	Hydraulic system	2330206
MC 110 Z	K004	13 - 254	Motor	Service packages | Diesel engine	1 pc.	**Replacement interval** 500 h	SCANIA - TIER 2 - STAGE II	Service packages	Drive unit - engine	2270747
			Motor	Service packages | Diesel engine	1 pc.	**First service | Replacement interval** 500 h | 2000 h	SCANIA - TIER 2 - STAGE II	Service packages	Drive unit - engine	2270754
		13 - 9999	Motor	Service packages | Diesel engine	1 pc.	**Replacement interval** 250 h	CATERPILLAR - TIER 3 - STAGE IIIA	Service packages	Drive unit - engine	2270778
			Motor	Service packages | Diesel engine	1 pc.	**First service | Replacement interval** 250 h | 3000 h	CATERPILLAR - TIER 3 - STAGE IIIA	Service packages	Drive unit - engine	2270779

MAINTENANCE PARTS

FILTER SETS										
Series code	Serial code	Series range	Type	Application	Requirement	Motor	Exhaust emission standard	Subassembly	Installation location	Part no.
MC 110 Z	K004	13 - 9999	Hydraulics	Service packages | Hydraulics	1 pc.	**First service | Replacement interval** 500 h | 1000 h	SCANIA - TIER 2 - STAGE II; SCANIA - TIER 3 - STAGE IIIA; SCANIA - LRC; CATERPILLAR - TIER 3 - STAGE IIIA	Service packages	Hydraulic system	F10615369
		200 - 9999	Motor	Service packages | Diesel engine	1 pc.	**Replacement interval** 500 h	SCANIA - LRC	Service packages	Drive unit - engine	2403244
			Motor	Service packages | Diesel engine	1 pc.	**First service | Replacement interval** 500 h | 2000 h	SCANIA - LRC	Service packages	Drive unit - engine	2403248
		255 - 9999	Motor	Service packages | Diesel engine	1 pc.	**First service | Replacement interval** 500 h | 2000 h	SCANIA - TIER 3 - STAGE IIIA	Service packages	Drive unit - engine	2270762
			Motor	Service packages | Diesel engine	1 pc.	**Replacement interval** 500 h	SCANIA - TIER 3 - STAGE IIIA	Service packages	Drive unit - engine	2270763

FILTER SETS

Series code	Serial code	Series range	Type	Application	Requirement	Motor	Exhaust emission standard	Subassembly	Installation location	Part no.
MC 110 Z EVO	K006	1 - 9999	Motor	Service packages | Diesel engine	1 pc.	**Replacement interval** 500 h	SCANIA - TIER 3 - STAGE IIIA; SCANIA - LRC	Service packages	Drive unit - engine	2270763
			Motor	Service packages | Diesel engine	1 pc.	**Replacement interval** 500 h	SCANIA - LRC; SCANIA - TIER 3 - STAGE IIIA	Service packages	Drive unit - engine	2403244
			Motor	Service packages | Diesel engine	1 pc.	**First service | Replacement interval** 500 h | 2000 h	SCANIA - LRC; SCANIA - TIER 3 - STAGE IIIA	Service packages	Drive unit - engine	2403247
			Motor	Service packages | Diesel engine	1 pc.	**First service | Replacement interval** 500 h | 2000 h	SCANIA - TIER 3 - STAGE IIIA; SCANIA - LRC	Service packages	Drive unit - engine	2270762
			Hydraulics	Service packages | Hydraulics	1 pc.	**Replacement interval** 1000 h	SCANIA - TIER 3 - STAGE IIIA; SCANIA - LRC	Service packages	Hydraulic system	2330206
			Hydraulics	Service packages | Hydraulics	1 pc.	**First service | Replacement interval** 500 h | 2000 h	SCANIA - TIER 3 - STAGE IIIA; SCANIA - LRC	Service packages	Hydraulic system	2330204

MAINTENANCE PARTS

FILTER SETS										
Series code	Serial code	Series range	Type	Application	Requirement	Motor	Exhaust emission standard	Subassembly	Installation location	Part no.
MC 110 R	K003	200 - 216	Motor	Service packages | Diesel engine	1 pc.	**Replacement interval** 500 h	SCANIA - TIER 2 - STAGE II	Service packages	Drive unit - engine	2270747
			Motor	Service packages | Diesel engine	1 pc.	**First service | Replacement interval** 500 h | 2000 h	SCANIA - TIER 2 - STAGE II	Service packages	Drive unit - engine	2270754
		1 - 9999	Motor	Service packages | Diesel engine	1 pc.	**Replacement interval** 250 h	CATERPILLAR - TIER 3 - STAGE IIIA	Service packages	Drive unit - engine	2270778
		200 - 9999	Motor	Service packages | Diesel engine	1 pc.	**Replacement interval** 500 h	SCANIA - LRC	Service packages	Drive unit - engine	2403244
			Motor	Service packages | Diesel engine	1 pc.	**First service | Replacement interval** 500 h | 2000 h	SCANIA - LRC	Service packages	Drive unit - engine	2403248

FILTER SETS

Series code	Serial code	Series range	Type	Application	Requirement	Motor	Exhaust emission standard	Subassembly	Installation location	Part no.
MC 110 R	K003	1 - 9999	Motor	Service packages | Diesel engine	1 pc.	**Engine manufacturer | Exhaust emission standard | First service | Replacement interval** CAT | US EPA Tier 3 | 250 h | 3000 h	CATERPILLAR - TIER 3 - STAGE IIIA	Service packages	Drive unit - engine	2270779
		200 - 9999	Hydraulics	Service packages | Hydraulics	1 pc.	**First service | Replacement interval** 500 h | 1000 h	SCANIA - TIER 2 - STAGE II; SCANIA - TIER 3 - STAGE IIIA; SCANIA - LRC; CATERPILLAR - TIER 3 - STAGE IIIA	Service packages	Hydraulic system	F10615369
		217 - 9999	Motor	Service packages | Diesel engine	1 pc.	**Replacement interval** 500 h	SCANIA - TIER 3 - STAGE IIIA	Service packages	Drive unit - engine	2270762
			Motor	Service packages | Diesel engine	1 pc.	**First service | Replacement interval** 500 h | 2000 h	SCANIA - TIER 3 - STAGE IIIA	Service packages	Drive unit - engine	2270763

MAINTENANCE PARTS

FILTER SETS

Series code	Serial code	Series range	Type	Application	Requirement	Motor	Exhaust emission standard	Subassembly	Installation location	Part no.
MC 110 Zi EVO	K015	1 - 9999	Motor	Service packages | Diesel engine	1 pc.	**First service | Replacement interval** 500 h | 2000 h	SCANIA - TIER 4F - STAGE IV; SCANIA - STAGE V	Service packages	Drive unit - engine	2382644
			Motor	Service packages | Diesel engine	1 pc.	**Replacement interval** 500 h	SCANIA - TIER 4F - STAGE IV; SCANIA - STAGE V	Service packages	Drive unit - engine	2562262
			Hydraulics	Service packages | Hydraulics	1 pc.	**First service | Replacement interval** 500 h | 2000 h	SCANIA - TIER 4F - STAGE IV; SCANIA - STAGE V	Service packages	Hydraulic system	2330204
			Hydraulics	Service packages | Hydraulics	1 pc.	**Replacement interval** 1000 h	SCANIA - TIER 4F - STAGE IV; SCANIA - STAGE V	Service packages	Hydraulic system	2330206
MC 120 Z	K007	53 - 226	Motor	Service packages | Diesel engine	1 pc.	**Replacement interval** 500 h	SCANIA - TIER 2 - STAGE II	Service packages	Drive unit - engine	2270755
			Motor	Service packages | Diesel engine	1 pc.	**First service | Replacement interval** 500 h | 2000 h	SCANIA - TIER 2 - STAGE II	Service packages	Drive unit - engine	2270756

FILTER SETS

Series code	Serial code	Series range	Type	Application	Requirement	Motor	Exhaust emission standard	Subassembly	Installation location	Part no.
MC 120 Z	K007	53 - 9999	Motor	Service packages | Diesel engine	1 pc.	**First service | Replacement interval** 250 h | 3000 h	CATERPILLAR - TIER 3 - STAGE IIIA	Service packages	Drive unit - engine	2270782
			Motor	Service packages | Diesel engine	1 pc.	**Replacement interval** 250 h	CATERPILLAR - TIER 3 - STAGE IIIA	Service packages	Drive unit - engine	2270780
			Hydraulics	Service packages | Hydraulics	1 pc.	**First service | Replacement interval** 500 h | 1000 h	SCANIA - TIER 2 - STAGE II; CATERPILLAR - TIER 3 - STAGE IIIA; SCANIA - TIER 3 - STAGE IIIA; SCANIA - LRC	Service packages	Hydraulic system	F10615349
		227 - 9999	Motor	Service packages | Diesel engine	1 pc.	**Replacement interval** 500 h	SCANIA - TIER 3 - STAGE IIIA	Service packages	Drive unit - engine	2270763
			Motor	Service packages | Diesel engine	1 pc.	**First service | Replacement interval** 500 h | 2000 h	SCANIA - TIER 3 - STAGE IIIA	Service packages	Drive unit - engine	2270764

MAINTENANCE PARTS

FILTER SETS										
Series code	Serial code	Series range	Type	Application	Requirement	Motor	Exhaust emission standard	Subassembly	Installation location	Part no.
MC 120 Z	K007	251 - 9999	Motor	Service packages | Diesel engine	1 pc.	**First service | Replacement interval** 500 h | 2000 h	SCANIA - LRC	Service packages	Drive unit - engine	2403248
			Motor	Service packages | Diesel engine	1 pc.	**Replacement interval** 500 h	SCANIA - LRC	Service packages	Drive unit - engine	2403244
MC 120 PRO	K034	1 - 9999	Motor	Service packages | Diesel engine	1 pc.	**First service | Replacement interval** 500 h | 2000 h	SCANIA - LRC; SCANIA - TIER 3 - STAGE IIIA	Service packages	Drive unit - engine	2562258
			Motor	Service packages | Diesel engine	1 pc.	**Replacement interval** 500 h	SCANIA - TIER 3 - STAGE IIIA	Service packages	Drive unit - engine	2532466
			Motor	Service packages | Diesel engine	1 pc.	**First service | Replacement interval** 500 h | 2000 h	SCANIA - TIER 3 - STAGE IIIA	Service packages	Drive unit - engine	2532465
			Motor	Service packages | Diesel engine	1 pc.	**Replacement interval** 500 h	SCANIA - LRC; SCANIA - TIER 3 - STAGE IIIA	Service packages	Drive unit - engine	2562256

FILTER SETS

Series code	Serial code	Series range	Type	Application	Requirement	Motor	Exhaust emission standard	Subassembly	Installation location	Part no.
MC 120 PRO	K034	1 - 9999	Hydraulics	Service packages | Hydraulics	1 pc.	**First service | Replacement interval** 500 h | 2000 h	SCANIA - TIER 3 - STAGE IIIA; SCANIA - LRC	Service packages	Hydraulic system	2585402
			Hydraulics	Service packages | Hydraulics	1 pc.	**Replacement interval** 1000 h	SCANIA - TIER 3 - STAGE IIIA; SCANIA - LRC	Service packages	Hydraulic system	2585404
	K035	1 - 9999	Motor	Service packages | Diesel engine	1 pc.	**First service | Replacement interval** 500 h | 2000 h	SCANIA - TIER 4F - STAGE IV	Service packages	Drive unit - engine	2562261
				Service packages | Diesel engine	1 pc.	**First service | Replacement interval** 500 h | 2000 h	SCANIA - STAGE V	Service packages	Drive unit - engine	2870408
			Motor	Service packages | Diesel engine	1 pc.	**Replacement interval** 500 h	SCANIA - STAGE V	Service packages	Drive unit - engine	2870407
			Motor	Service packages | Diesel engine	1 pc.	**Replacement interval** 500 h	SCANIA - TIER 4F - STAGE IV	Service packages	Drive unit - engine	2562262

MAINTENANCE PARTS

FILTER SETS

Series code	Serial code	Series range	Type	Application	Requirement	Motor	Exhaust emission standard	Subassembly	Installation location	Part no.
MC 120 PRO	K035	1 - 9999	Hydraulics	Service packages | Hydraulics	1 pc.	**First service | Replacement interval** 500 h | 2000 h	SCANIA - TIER 4F - STAGE IV; SCANIA - STAGE V	Service packages	Hydraulic system	2585402
			Hydraulics	Service packages | Hydraulics	1 pc.	**Replacement interval** 1000 h	SCANIA - TIER 4F - STAGE IV; SCANIA - STAGE V	Service packages	Hydraulic system	2585404
MC 125 PRO	K008	220 - 9999	Motor	Service packages | Diesel engine	1 pc.	**Replacement interval** 500 h	SCANIA - TIER 3 - STAGE IIIA; SCANIA - LRC	Service packages	Drive unit - engine	2270763
			Motor	Service packages | Diesel engine	1 pc.	**First service | Replacement interval** 500 h | 2000 h	SCANIA - TIER 3 - STAGE IIIA; SCANIA - LRC	Service packages	Drive unit - engine	2270764
			Hydraulics	Service packages | Hydraulics	1 pc.	**First service | Replacement interval** 500 h | 1000 h	SCANIA - TIER 3 - STAGE IIIA; SCANIA - LRC	Service packages	Hydraulic system	F10615349
MCO 9 EVO	K072	1 - 9999	Motor	Service packages | Diesel engine	1 pc.	**First service | Replacement interval** 500 h | 2000 h	SCANIA - LRC	Service packages	Drive unit - engine	2403247

FILTER SETS

Series code	Serial code	Series range	Type	Application	Requirement	Motor	Exhaust emission standard	Subassembly	Installation location	Part no.
MCO 9 EVO	K072	1 - 9999	Motor	Service packages | Diesel engine	1 pc.	**Replacement interval** 500 h	SCANIA - LRC	Service packages	Drive unit - engine	2403244
			Motor	Service packages | Diesel engine	1 pc.	**First service | Replacement interval** 500 h | 2000 h	SCANIA - TIER 3 - STAGE IIIA; SCANIA - LRC	Service packages	Drive unit - engine	2270762
			Motor	Service packages | Diesel engine	1 pc.	**Replacement interval** 500 h	SCANIA - TIER 3 - STAGE IIIA; SCANIA - LRC	Service packages	Drive unit - engine	2270763
			Hydraulics	Service packages | Hydraulics	1 pc.	**Replacement interval** 1000 h	SCANIA - TIER 3 - STAGE IIIA; SCANIA - LRC	Service packages	Hydraulic system	2393114
			Hydraulics	Service packages | Hydraulics | Cone crusher	1 pc.	**First service | Replacement interval** 500 h | 2000 h	SCANIA - TIER 3 - STAGE IIIA; SCANIA - LRC	Service packages	Lubrication system	2390020
MCO 9i EVO	K073	1 - 9999	Motor	Service packages | Diesel engine	1 pc.	**Replacement interval** 500 h	SCANIA - TIER 4F - STAGE IV	Service packages	Drive unit - engine	2562262

MAINTENANCE PARTS

FILTER SETS										
Series code	Serial code	Series range	Type	Application	Requirement	Motor	Exhaust emission standard	Subassembly	Installation location	Part no.
MCO 9i EVO	K073	1 - 9999	Motor	Service packages | Diesel engine	1 pc.	**First service | Replacement interval** 500 h | 2000 h	SCANIA - TIER 4F - STAGE IV	Service packages	Drive unit - engine	2382644
			Hydraulics	Service packages | Hydraulics	1 pc.	**Replacement interval** 1000 h	SCANIA - TIER 4F - STAGE IV	Service packages	Hydraulic system	2393114
			Hydraulics	Service packages | Hydraulics | Cone crusher	1 pc.	**First service | Replacement interval** 500 h | 2000 h	SCANIA - TIER 4F - STAGE IV	Service packages	Lubrication system	2390020
MCO 9S EVO	K074	1 - 9999	Motor	Service packages | Diesel engine	1 pc.	**First service | Replacement interval** 500 h | 2000 h	SCANIA - LRC; SCANIA - TIER 3 - STAGE IIIA	Service packages	Drive unit - engine	2403247
			Motor	Service packages | Diesel engine	1 pc.	**Replacement interval** 500 h	SCANIA - LRC; SCANIA - TIER 3 - STAGE IIIA	Service packages	Drive unit - engine	2403244
			Motor	Service packages | Diesel engine	1 pc.	**First service | Replacement interval** 500 h | 2000 h	SCANIA - TIER 3 - STAGE IIIA	Service packages	Drive unit - engine	2270762

FILTER SETS

Series code	Serial code	Series range	Type	Application	Requirement	Motor	Exhaust emission standard	Subassembly	Installation location	Part no.
MCO 9S EVO	K074	1 - 9999	Motor	Service packages | Diesel engine	1 pc.	**Replacement interval** 500 h	SCANIA - TIER 3 - STAGE IIIA	Service packages	Drive unit - engine	2270763
			Hydraulics	Service packages | Hydraulics	1 pc.	**Replacement interval** 1000 h	SCANIA - TIER 3 - STAGE IIIA; SCANIA - LRC	Service packages	Hydraulic system	2393114
			Hydraulics	Service packages | Hydraulics | Cone crusher	1 pc.	**First service | Replacement interval** 500 h | 2000 h	SCANIA - TIER 3 - STAGE IIIA; SCANIA - LRC	Service packages	Lubrication system	2390020
MCO 9Si EVO	K075	1 - 9999	Motor	Service packages | Diesel engine	1 pc.	**Replacement interval** 500 h	SCANIA - TIER 4F - STAGE IV; SCANIA - STAGE V	Service packages	Drive unit - engine	2562262
			Motor	Service packages | Diesel engine	1 pc.	**First service | Replacement interval** 500 h | 2000 h	SCANIA - TIER 4F - STAGE IV; SCANIA - STAGE V	Service packages	Drive unit - engine	2382644
			Hydraulics	Service packages | Hydraulics	1 pc.	**Replacement interval** 1000 h	SCANIA - TIER 4F - STAGE IV; SCANIA - STAGE V	Service packages	Hydraulic system	2393114

MAINTENANCE PARTS

FILTER SETS

Series code	Serial code	Series range	Type	Application	Requirement	Motor	Exhaust emission standard	Subassembly	Installation location	Part no.
MCO 9Si EVO	K075	1 - 9999	Hydraulics	Service packages | Hydraulics | Cone crusher	1 pc.	**First service | Replacement interval** 500 h | 2000 h	SCANIA - TIER 4F - STAGE IV; SCANIA - STAGE V	Service packages	Lubrication system	2390020
MCO 110	K038	200 - 9999	Motor	Service packages | Diesel engine	1 pc.	**Replacement interval** 500 h	SCANIA - TIER 3 - STAGE IIIA	Service packages	Drive unit - engine	2270763
			Motor	Service packages | Diesel engine	1 pc.	**First service | Replacement interval** 500 h | 2000 h	SCANIA - TIER 3 - STAGE IIIA	Service packages	Drive unit - engine	2270764
			Motor	Service packages | Diesel engine	1 pc.	**Replacement interval** 250 h	CATERPILLAR - TIER 3 - STAGE IIIA	Service packages	Drive unit - engine	2270771
			Motor	Service packages | Diesel engine	1 pc.	**Replacement interval** 500 h	SCANIA - TIER 2 - STAGE II	Service packages	Drive unit - engine	2270755
			Motor	Service packages | Diesel engine	1 pc.	**First service | Replacement interval** 500 h | 2000 h	SCANIA - TIER 2 - STAGE II	Service packages	Drive unit - engine	2270756
			Motor	Service packages | Diesel engine	1 pc.	**First service | Replacement interval** 250 h | 3000 h	CATERPILLAR - TIER 3 - STAGE IIIA	Service packages	Drive unit - engine	2270772

Due to possible technical changes, always refer to the information in the instruction manual.

FILTER SETS

Series code	Serial code	Series range	Type	Application	Requirement	Motor	Exhaust emission standard	Subassembly	Installation location	Part no.
MCO 110	K038	200 - 9999	Motor	Service packages | Diesel engine	1 pc.	**Replacement interval** 500 h	SCANIA - LRC	Service packages	Drive unit - engine	2403244
			Motor	Service packages | Diesel engine	1 pc.	**First service | Replacement interval** 500 h | 2000 h	SCANIA - LRC	Service packages	Drive unit - engine	2403248
			Hydraulics	Service packages | Hydraulics	1 pc.	**First service | Replacement interval** 500 h | 1000 h	SCANIA - TIER 3 - STAGE IIIA; CATERPILLAR - TIER 3 - STAGE IIIA; SCANIA - LRC; SCANIA - TIER 2 - STAGE II	Service packages	Hydraulic system	F10615349
				Service packages | Hydraulics | Cone crusher	1 pc.	**First service | Replacement interval** 500 h | 1000 h	SCANIA - TIER 3 - STAGE IIIA; CATERPILLAR - TIER 3 - STAGE IIIA; SCANIA - LRC	Service packages	Lubrication system	2314320
MCO 110 PRO	K110	1 - 7	Hydraulics	Service packages | Hydraulics | Cone crusher	1 pc.	**First service | Replacement interval** 500 h | 2000 h	SCANIA - TIER 3 - STAGE IIIA; SCANIA - LRC	Service packages	Lubrication system	2533774

Due to possible technical changes, always refer to the information in the instruction manual.

MAINTENANCE PARTS

FILTER SETS

Series code	Serial code	Series range	Type	Application	Requirement	Motor	Exhaust emission standard	Subassembly	Installation location	Part no.
MCO 110 PRO	K110	1 - 9999	Motor	Service packs | diesel engine | Cold package	1 pc.	**Replacement interval** 500 h	SCANIA - TIER 3 - STAGE IIIA	Service packages	Drive unit - engine	2532466
			Motor	Service packages | Diesel engine	1 pc.	**First service | Replacement interval** 500 h | 2000 h	SCANIA - TIER 3 - STAGE IIIA; SCANIA - LRC	Service packages	Drive unit - engine	2562258
			Motor	Service packs | diesel engine | Cold package	1 pc.	**Replacement interval** 500 h	SCANIA - LRC	Service packages	Drive unit - engine	2562256
			Motor	Service packages | Diesel engine	1 pc.	**First service | Replacement interval** 500 h | 2000 h	SCANIA - TIER 3 - STAGE IIIA	Service packages	Drive unit - engine	2532465
			Hydraulics	Service packages | Hydraulics | Cone crusher	1 pc.	**Replacement interval** 1000 h	SCANIA - TIER 3 - STAGE IIIA; SCANIA - LRC	Service packages	Lubrication system	2533780
		8 - 9999		Service packages | Hydraulics | Cone crusher	1 pc.	**First service | Replacement interval** 500 h | 2000 h	SCANIA - LRC; SCANIA - TIER 3 - STAGE IIIA	Service packages	Lubrication system	3031413

FILTER SETS

Series code	Serial code	Series range	Type	Application	Requirement	Motor	Exhaust emission standard	Subassembly	Installation location	Part no.
MCO 110 PRO	K111	1 - 3	Hydraulics	Service packages | Hydraulics | Cone crusher	1 pc.	**First service | Replacement interval** 500 h | 2000 h	SCANIA - TIER 4F - STAGE IV	Service packages	Lubrication system	2533774
		1 - 9999	Motor	Service packages | Diesel engine	1 pc.	**Replacement interval** 500 h	SCANIA - TIER 4F - STAGE IV	Service packages	Drive unit - engine	2562262
			Motor	Service packages | Diesel engine	1 pc.	**First service | Replacement interval** 500 h | 2000 h	SCANIA - TIER 4F - STAGE IV	Service packages	Drive unit - engine	2562261
			Hydraulics	Service packages | Hydraulics | Cone crusher	1 pc.	**Replacement interval** 1000 h	SCANIA - TIER 4F - STAGE IV; SCANIA - STAGE V	Service packages	Lubrication system	2533780
		4 - 9999		Service packages | Hydraulics | Cone crusher	1 pc.	**First service | Replacement interval** 500 h | 2000 h	SCANIA - TIER 4F - STAGE IV; SCANIA - STAGE V	Service packages	Lubrication system	3031413
		9 - 9999		Service packages | Diesel engine	1 pc.	**First service | Replacement interval** 500 h | 2000 h	SCANIA - STAGE V	Service packages	Drive unit - engine	2870408

MAINTENANCE PARTS

FILTER SETS

Series code	Serial code	Series range	Type	Application	Requirement	Motor	Exhaust emission standard	Subassembly	Installation location	Part no.
MCO 110 PRO	K111	9 - 9999	Motor	Service packages | Diesel engine	1 pc.	**Replacement interval** 500 h	SCANIA - STAGE V	Service packages	Drive unit - engine	2870407
MCO 110 S PRO	K064	209 - 9999	Motor	Service packages | Diesel engine	1 pc.	**Replacement interval** 500 h	SCANIA - TIER 3 - STAGE IIIA	Service packages	Drive unit - engine	2270763
			Motor	Service packages | Diesel engine	1 pc.	**First service | Replacement interval** 500 h | 2000 h	SCANIA - TIER 3 - STAGE IIIA	Service packages	Drive unit - engine	2270764
				Service packages | Diesel engine	1 pc.	**First service | Replacement interval** 500 h | 2000 h	SCANIA - STAGE V	Service packages	Drive unit - engine	2870408
			Motor	Service packages | Diesel engine	1 pc.	**Replacement interval** 500 h	SCANIA - STAGE V	Service packages	Drive unit - engine	2870407
				Service packages | Hydraulics	1 pc.	**First service | Replacement interval** 500 h | 1000 h	SCANIA - TIER 3 - STAGE IIIA; SCANIA - STAGE V	Service packages	Hydraulic system	2552462
				Service packages | Hydraulics | Cone crusher	1 pc.	**First service | Replacement interval** 500 h | 1000 h	SCANIA - TIER 3 - STAGE IIIA; SCANIA - STAGE V	Service packages	Lubrication system	2314320

Due to possible technical changes, always refer to the information in the instruction manual.

FILTER SETS

Series code	Serial code	Series range	Type	Application	Requirement	Motor	Exhaust emission standard	Subassembly	Installation location	Part no.
MCO 130 PRO	K042	1 - 200	Motor	Service packages | Diesel engine	1 pc.	**First service | Replacement interval** 500 h | 2000 h	SCANIA - TIER 3 - STAGE IIIA	Service packages	Drive unit - engine	2270766
			Motor	Service packages | Diesel engine	1 pc.	**Replacement interval** 500 h	SCANIA - TIER 3 - STAGE IIIA	Service packages	Drive unit - engine	2270765
		1 - 9999	Motor	Service packages | Diesel engine	1 pc.	**Replacement interval** 250 h	CATERPILLAR - TIER 3 - STAGE IIIA	Service packages	Drive unit - engine	2270771
			Motor	Service packages | Diesel engine	1 pc.	**Engine manufacturer | Exhaust emission standard | First service | Replacement interval** CAT | US EPA Tier 3 | 250 h | 3000 h	CATERPILLAR - TIER 3 - STAGE IIIA	Service packages	Drive unit - engine	2270772
			Motor	Service packages | Diesel engine	1 pc.	**First service | Replacement interval** 500 h | 2000 h	SCANIA - TIER 2 - STAGE II	Service packages	Drive unit - engine	2270760

MAINTENANCE PARTS

FILTER SETS

Series code	Serial code	Series range	Type	Application	Requirement	Motor	Exhaust emission standard	Subassembly	Installation location	Part no.
MCO 130 PRO	K042	1 - 9999	Motor	Service packages | Diesel engine	1 pc.	**Replacement interval** 500 h	SCANIA - TIER 2 - STAGE II	Service packages	Drive unit - engine	2270758
			Hydraulics	Service packages | Hydraulics	1 pc.	**First service | Replacement interval** 500 h | 1000 h	SCANIA - TIER 3 - STAGE IIIA	Service packages	Hydraulic system	F10615349
		201 - 9999	Motor	Service packages | Diesel engine	1 pc.	**Replacement interval** 500 h	SCANIA - TIER 3 - STAGE IIIA	Service packages	Drive unit - engine	2362830
			Motor	Service packages | Diesel engine	1 pc.	**First service | Replacement interval** 500 h | 2000 h	SCANIA - TIER 3 - STAGE IIIA	Service packages	Drive unit - engine	2362836
				Service packages | Hydraulics | Cone crusher	1 pc.	**First service | Replacement interval** 500 h | 1000 h	SCANIA - TIER 3 - STAGE IIIA	Service packages	Lubrication system	2314320
MCO 130 S PRO	K044	1 - 205	Motor	Service packages | Diesel engine	1 pc.	**First service | Replacement interval** 500 h | 2000 h	SCANIA - TIER 3 - STAGE IIIA	Service packages	Drive unit - engine	2270766
			Motor	Service packages | Diesel engine	1 pc.	**Replacement interval** 500 h	SCANIA - TIER 3 - STAGE IIIA	Service packages	Drive unit - engine	2270765

Due to possible technical changes, always refer to the information in the instruction manual.

FILTER SETS

Series code	Serial code	Series range	Type	Application	Requirement	Motor	Exhaust emission standard	Subassembly	Installation location	Part no.
MCO 130 S PRO	K044	207 - 9999	Motor	Service packages | Diesel engine	1 pc.	**First service | Replacement interval** 500 h | 2000 h	SCANIA - TIER 3 - STAGE IIIA	Service packages	Drive unit - engine	2362836
			Motor	Service packages | Diesel engine	1 pc.	**Replacement interval** 500 h	SCANIA - TIER 3 - STAGE IIIA	Service packages	Drive unit - engine	2362830
			Hydraulics	Service packages | Hydraulics	1 pc.	**First service | Replacement interval** 500 h | 1000 h	SCANIA - TIER 3 - STAGE IIIA	Service packages	Hydraulic system	F10615349
				Service packages | Hydraulics | Cone crusher	1 pc.	**First service | Replacement interval** 500 h | 1000 h	SCANIA - TIER 3 - STAGE IIIA	Service packages	Lubrication system	2314320
MR 100 R	K012	33 - 9999	Motor	Service packages | Diesel engine	1 pc.	**Replacement interval** 500 h	SCANIA - TIER 2 - STAGE II	Service packages	Drive unit - engine	2270755
			Motor	Service packages | Diesel engine	1 pc.	**First service | Replacement interval** 500 h | 2000 h	SCANIA - TIER 2 - STAGE II	Service packages	Drive unit - engine	2270756

MAINTENANCE PARTS

FILTER SETS

Series code	Serial code	Series range	Type	Application	Requirement	Motor	Exhaust emission standard	Subassembly	Installation location	Part no.
MR 100 R	K012	33 - 9999	Hydraulics	Service packages | Hydraulics	1 pc.	**First service | Replacement interval** 500 h | 1000 h	SCANIA - TIER 2 - STAGE II	Service packages	Hydraulic system	F10615379
MR 100 Z	K013	10 - 9999	Motor	Service packages | Diesel engine	1 pc.	**Replacement interval** 500 h	SCANIA - TIER 2 - STAGE II	Service packages	Drive unit - engine	2270755
			Motor	Service packages | Diesel engine	1 pc.	**First service | Replacement interval** 500 h | 2000 h	SCANIA - TIER 2 - STAGE II	Service packages	Drive unit - engine	2270756
			Hydraulics	Service packages | Hydraulics	1 pc.	**First service | Replacement interval** 500 h | 1000 h	SCANIA - TIER 2 - STAGE II	Service packages	Hydraulic system	F10615379
MR 110 R EVO	K016	1 - 4	Motor	Service packages | Diesel engine	1 pc.	**Replacement interval** 500 h	SCANIA - TIER 2 - STAGE II	Service packages	Drive unit - engine	2270755
			Motor	Service packages | Diesel engine	1 pc.	**First service | Replacement interval** 500 h | 2000 h	SCANIA - TIER 2 - STAGE II	Service packages	Drive unit - engine	2270756
		1 - 9999	Motor	Service packages | Diesel engine	1 pc.	**Replacement interval** 250 h	CATERPILLAR - TIER 3 - STAGE IIIA	Service packages	Drive unit - engine	2270780

Due to possible technical changes, always refer to the information in the instruction manual.

FILTER SETS

Series code	Serial code	Series range	Type	Application	Requirement	Motor	Exhaust emission standard	Subassembly	Installation location	Part no.
MR 110 R EVO	K016	1 - 9999	Motor	Service packages | Diesel engine	1 pc.	**Engine manufacturer | Exhaust emission standard | First service | Replacement interval** CAT | US EPA Tier 3 | 250 h | 3000 h	CATERPILLAR - TIER 3 - STAGE IIIA	Service packages	Drive unit - engine	2270782
			Hydraulics	Service packages | Hydraulics	1 pc.	**First service | Replacement interval** 500 h | 1000 h	SCANIA - TIER 2 - STAGE II; SCANIA - TIER 3 - STAGE IIIA	Service packages	Hydraulic system	F10625559
		5 - 9999	Motor	Service packages | Diesel engine	1 pc.	**First service | Replacement interval** 500 h | 2000 h	SCANIA - TIER 3 - STAGE IIIA	Service packages	Drive unit - engine	2270764
			Motor	Service packages | Diesel engine	1 pc.	**Replacement interval** 500 h	SCANIA - TIER 3 - STAGE IIIA	Service packages	Drive unit - engine	2270763
MR 110 Z EVO	K017	3 - 51	Motor	Service packages | Diesel engine	1 pc.	**First service | Replacement interval** 500 h | 2000 h	SCANIA - TIER 2 - STAGE II	Service packages	Drive unit - engine	2270756

Due to possible technical changes, always refer to the information in the instruction manual.

MAINTENANCE PARTS

FILTER SETS										
Series code	Serial code	Series range	Type	Application	Requirement	Motor	Exhaust emission standard	Subassembly	Installation location	Part no.
MR 110 Z EVO	K017	3 - 51	Motor	Service packages | Diesel engine	1 pc.	**Replacement interval** 500 h	SCANIA - TIER 2 - STAGE II	Service packages	Drive unit - engine	2270755
		3 - 9999	Motor	Service packages | Diesel engine	1 pc.	**First service | Replacement interval** 500 h | 2000 h	SCANIA - LRC	Service packages	Drive unit - engine	2403248
		1 - 9999	Motor	Service packages | Diesel engine	1 pc.	**Engine manufacturer | Exhaust emission standard | First service | Replacement interval** CAT | US EPA Tier 3 | 250 h | 3000 h	CATERPILLAR - TIER 3 - STAGE IIIA	Service packages	Drive unit - engine	2270782
			Motor	Service packages | Diesel engine	1 pc.	**Replacement interval** 250 h	CATERPILLAR - TIER 3 - STAGE IIIA	Service packages	Drive unit - engine	2270780
		3 - 9999	Motor	Service packages | Diesel engine	1 pc.	**Replacement interval** 500 h	SCANIA - LRC	Service packages	Drive unit - engine	2403244

FILTER SETS

Series code	Serial code	Series range	Type	Application	Requirement	Motor	Exhaust emission standard	Subassembly	Installation location	Part no.
MR 110 Z EVO	K017	3 - 9999	Hydraulics	Service packages | Hydraulics	1 pc.	**First service | Replacement interval** 500 h | 1000 h	SCANIA - TIER 2 - STAGE II; CATERPILLAR - TIER 3 - STAGE IIIA; SCANIA - TIER 3 - STAGE IIIA; SCANIA - LRC	Service packages	Hydraulic system	F10625559
		52 - 9999	Motor	Service packages | Diesel engine	1 pc.	**First service | Replacement interval** 500 h | 2000 h	SCANIA - TIER 3 - STAGE IIIA	Service packages	Drive unit - engine	2270764
			Motor	Service packages | Diesel engine	1 pc.	**Replacement interval** 500 h	SCANIA - TIER 3 - STAGE IIIA	Service packages	Drive unit - engine	2270763
MR 110 EVO	K018	1 - 18	Motor	Service packages | Diesel engine	1 pc.	**Replacement interval** 500 h	SCANIA - LRC	Service packages	Drive unit - engine	2270763
			Motor	Service packages | Diesel engine	1 pc.	**First service | Replacement interval** 500 h | 2000 h	SCANIA - LRC	Service packages	Drive unit - engine	2270764

MAINTENANCE PARTS

FILTER SETS

Series code	Serial code	Series range	Type	Application	Requirement	Motor	Exhaust emission standard	Subassembly	Installation location	Part no.
MR 110 EVO	K018	1 - 9999	Motor	Service packages | Diesel engine	1 pc.	**First service | Replacement interval** 500 h | 2000 h	SCANIA - TIER 3 - STAGE IIIA; SCANIA - LRC	Service packages	Drive unit - engine	2270764
			Motor	Service packages | Diesel engine	1 pc.	**Replacement interval** 500 h	SCANIA - TIER 3 - STAGE IIIA; SCANIA - LRC	Service packages	Drive unit - engine	2270763
			Hydraulics	Service packages | Hydraulics	1 pc.	**Replacement interval** 1000 h	SCANIA - TIER 3 - STAGE IIIA; SCANIA - LRC	Service packages	Hydraulic system	2582725
			Hydraulics	Service packages | Hydraulics	1 pc.	**First service | Replacement interval** 500 h | 2000 h	SCANIA - TIER 3 - STAGE IIIA; SCANIA - LRC	Service packages	Hydraulic system	2378001
		19 - 9999	Motor	Service packages | Diesel engine	1 pc.	**First service | Replacement interval** 500 h | 2000 h	SCANIA - LRC	Service packages	Drive unit - engine	2403248
			Motor	Service packages | Diesel engine	1 pc.	**Replacement interval** 500 h	SCANIA - LRC	Service packages	Drive unit - engine	2403244

FILTER SETS

Series code	Serial code	Series range	Type	Application	Requirement	Motor	Exhaust emission standard	Subassembly	Installation location	Part no.
MR 110 EVO	K019	1 - 9999	Motor	Service packages | Diesel engine	1 pc.	**Replacement interval** 500 h	SCANIA - TIER 4F - STAGE IV	Service packages	Drive unit - engine	2562262
			Motor	Service packages | Diesel engine	1 pc.	**First service | Replacement interval** 500 h | 2000 h	SCANIA - TIER 4F - STAGE IV	Service packages	Drive unit - engine	2382642
			Motor	Service packages | Diesel engine	1 pc.	**Replacement interval** 500 h	SCANIA - STAGE V	Service packages	Drive unit - engine	2870407
				Service packages | Diesel engine	1 pc.	**First service | Replacement interval** 500 h | 2000 h	SCANIA - STAGE V	Service packages	Drive unit - engine	2870408
			Hydraulics	Service packages | Hydraulics	1 pc.	**Replacement interval** 1000 h	SCANIA - TIER 4F - STAGE IV; SCANIA - STAGE V	Service packages	Hydraulic system	2582725
			Hydraulics	Service packages | Hydraulics	1 pc.	**First service | Replacement interval** 500 h | 2000 h	SCANIA - TIER 4F - STAGE IV; SCANIA - STAGE V	Service packages	Hydraulic system	2378001
MR 122 PRO	K062	66 - 218	Motor	Service packages | Diesel engine	1 pc.	**Replacement interval** 500 h	SCANIA - TIER 2 - STAGE II	Service packages	Drive unit - engine	2270755

Due to possible technical changes, always refer to the information in the instruction manual.

MAINTENANCE PARTS

FILTER SETS										
Series code	Serial code	Series range	Type	Application	Requirement	Motor	Exhaust emission standard	Subassembly	Installation location	Part no.
MR 122 PRO	K062	66 - 218	Motor	Service packages | Diesel engine	1 pc.	**First service | Replacement interval** 500 h | 2000 h	SCANIA - TIER 2 - STAGE II	Service packages	Drive unit - engine	2270756
		66 - 9999	Motor	Service packages | Diesel engine	1 pc.	**First service | Replacement interval** 250 h | 3000 h	CATERPILLAR - TIER 3 - STAGE IIIA	Service packages	Drive unit - engine	2270782
			Motor	Service packages | Diesel engine	1 pc.	**Replacement interval** 250 h	CATERPILLAR - TIER 3 - STAGE IIIA	Service packages	Drive unit - engine	2270780
			Hydraulics	Service packages | Hydraulics	1 pc.	**First service | Replacement interval** 500 h | 1000 h	SCANIA - TIER 2 - STAGE II; CATERPILLAR - TIER 3 - STAGE IIIA; SCANIA - TIER 3 - STAGE IIIA; SCANIA - LRC	Service packages	Hydraulic system	F10615349
		219 - 9999	Motor	Service packages | Diesel engine	1 pc.	**First service | Replacement interval** 500 h | 2000 h	SCANIA - TIER 3 - STAGE IIIA	Service packages	Drive unit - engine	2270764

FILTER SETS

Series code	Serial code	Series range	Type	Application	Requirement	Motor	Exhaust emission standard	Subassembly	Installation location	Part no.
MR 122 PRO	K062	219 - 9999	Motor	Service packages | Diesel engine	1 pc.	**Replacement interval** 500 h	SCANIA - TIER 3 - STAGE IIIA	Service packages	Drive unit - engine	2270763
		240 - 9999	Motor	Service packages | Diesel engine	1 pc.	**Replacement interval** 500 h	SCANIA - LRC	Service packages	Drive unit - engine	2403244
			Motor	Service packages | Diesel engine	1 pc.	**First service | Replacement interval** 500 h | 2000 h	SCANIA - LRC	Service packages	Drive unit - engine	2403248
MR 130 R EVO	K023	200 - 9999	Motor	Service packages | Diesel engine	1 pc.	**First service | Replacement interval** 500 h | 2000 h	SCANIA - TIER 2 - STAGE II	Service packages	Drive unit - engine	2270756
			Motor	Service packages | Diesel engine	1 pc.	**Replacement interval** 500 h	SCANIA - TIER 3 - STAGE IIIA	Service packages	Drive unit - engine	2270763
			Motor	Service packages | Diesel engine	1 pc.	**First service | Replacement interval** 500 h | 2000 h	SCANIA - TIER 3 - STAGE IIIA	Service packages	Drive unit - engine	2270764
			Motor	Service packages | Diesel engine	1 pc.	**Replacement interval** 500 h	SCANIA - TIER 2 - STAGE II	Service packages	Drive unit - engine	2270755

MAINTENANCE PARTS

FILTER SETS										
Series code	Serial code	Series range	Type	Application	Requirement	Motor	Exhaust emission standard	Subassembly	Installation location	Part no.
MR 130 R EVO	K023	1 - 199	Motor	Service packages | Diesel engine	1 pc.	**Engine manufacturer | Exhaust emission standard | First service | Replacement interval** CAT | US EPA Tier 3 | 250 h | 3000 h	CATERPILLAR - TIER 3 - STAGE IIIA	Service packages	Drive unit - engine	2270772
			Motor	Service packages | Diesel engine	1 pc.	**Replacement interval** 250 h	CATERPILLAR - TIER 3 - STAGE IIIA	Service packages	Drive unit - engine	2270771
		200 - 9999	Hydraulics	Service packages | Hydraulics	1 pc.	**First service | Replacement interval** 500 h | 1000 h	SCANIA - TIER 2 - STAGE II; SCANIA - TIER 3 - STAGE IIIA	Service packages	Hydraulic system	F10625559
MR 130 Z EVO	K024	70 - 299	Hydraulics	Service packages | Hydraulics	1 pc.	**First service | Replacement interval** 500 h | 1000 h	SCANIA - TIER 2 - STAGE II	Service packages	Hydraulic system	F10615389
		70 - 356	Motor	Service packages | Diesel engine	1 pc.	**Replacement interval** 500 h	SCANIA - TIER 2 - STAGE II	Service packages	Drive unit - engine	2270755

FILTER SETS

Series code	Serial code	Series range	Type	Application	Requirement	Motor	Exhaust emission standard	Subassembly	Installation location	Part no.
MR 130 Z EVO	K024	70 - 356	Motor	Service packages | Diesel engine	1 pc.	**First service | Replacement interval** 500 h | 2000 h	SCANIA - TIER 2 - STAGE II	Service packages	Drive unit - engine	2270756
		301 - 9999	Motor	Service packages | Diesel engine	1 pc.	**Engine manufacturer | Exhaust emission standard | First service | Replacement interval** CAT | US EPA Tier 3 | 250 h | 3000 h	CATERPILLAR - TIER 3 - STAGE IIIA	Service packages	Drive unit - engine	2270772
			Motor	Service packages | Diesel engine	1 pc.	**Replacement interval** 250 h	CATERPILLAR - TIER 3 - STAGE IIIA	Service packages	Drive unit - engine	2270771
			Hydraulics	Service packages | Hydraulics	1 pc.	**First service | Replacement interval** 500 h | 1000 h	CATERPILLAR - TIER 3 - STAGE IIIA; SCANIA - TIER 3 - STAGE IIIA; SCANIA - LRC	Service packages	Hydraulic system	F10625559

MAINTENANCE PARTS

FILTER SETS

Series code	Serial code	Series range	Type	Application	Requirement	Motor	Exhaust emission standard	Subassembly	Installation location	Part no.
MR 130 Z EVO	K024	357 - 9999	Motor	Service packages | Diesel engine	1 pc.	**First service | Replacement interval** 500 h | 2000 h	SCANIA - LRC	Service packages	Drive unit - engine	2403248
			Motor	Service packages | Diesel engine	1 pc.	**Replacement interval** 500 h	SCANIA - TIER 3 - STAGE IIIA	Service packages	Drive unit - engine	2270763
			Motor	Service packages | Diesel engine	1 pc.	**First service | Replacement interval** 500 h | 2000 h	SCANIA - TIER 3 - STAGE IIIA	Service packages	Drive unit - engine	2270764
			Motor	Service packages | Diesel engine	1 pc.	**Replacement interval** 500 h	SCANIA - LRC	Service packages	Drive unit - engine	2403244
MR 130 EVO	K077	1 - 9999	Motor	Service packages | Diesel engine	1 pc.	**Replacement interval** 500 h	SCANIA - TIER 3 - STAGE IIIA	Service packages	Drive unit - engine	2270763
			Motor	Service packages | Diesel engine	1 pc.	**Replacement interval** 500 h	SCANIA - LRC; SCANIA - TIER 3 - STAGE IIIA	Service packages	Drive unit - engine	2403244
			Motor	Service packages | Diesel engine	1 pc.	**First service | Replacement interval** 500 h | 2000 h	SCANIA - LRC; SCANIA - TIER 3 - STAGE IIIA	Service packages	Drive unit - engine	2403248

Due to possible technical changes, always refer to the information in the instruction manual.

FILTER SETS

Series code	Serial code	Series range	Type	Application	Requirement	Motor	Exhaust emission standard	Subassembly	Installation location	Part no.
MR 130 EVO	K077	1 - 9999	Motor	Service packages | Diesel engine	1 pc.	**First service | Replacement interval** 500 h | 2000 h	SCANIA - TIER 3 - STAGE IIIA	Service packages	Drive unit - engine	2270764
			Hydraulics	Service packages | Hydraulics	1 pc.	**Replacement interval** 1000 h	SCANIA - TIER 3 - STAGE IIIA; SCANIA - LRC	Service packages	Hydraulic system	2582725
			Hydraulics	Service packages | Hydraulics	1 pc.	**First service | Replacement interval** 500 h | 2000 h	SCANIA - TIER 3 - STAGE IIIA; SCANIA - LRC	Service packages	Hydraulic system	2378001
	K078	1 - 9999	Motor	Service packages | Diesel engine	1 pc.	**Replacement interval** 500 h	SCANIA - TIER 4F - STAGE IV	Service packages	Drive unit - engine	2562262
			Motor	Service packages | Diesel engine	1 pc.	**First service | Replacement interval** 500 h | 2000 h	SCANIA - TIER 4F - STAGE IV	Service packages	Drive unit - engine	2382642
			Motor	Service packages | Diesel engine	1 pc.	**Replacement interval** 500 h	SCANIA - STAGE V	Service packages	Drive unit - engine	2870407

MAINTENANCE PARTS

FILTER SETS										
Series code	Serial code	Series range	Type	Application	Requirement	Motor	Exhaust emission standard	Subassembly	Installation location	Part no.
MR 130 EVO	K078	1 - 9999		Service packages | Diesel engine	1 pc.	**First service | Replacement interval** 500 h | 2000 h	SCANIA - STAGE V	Service packages	Drive unit - engine	2870408
			Hydraulics	Service packages | Hydraulics	1 pc.	**Replacement interval** 1000 h	SCANIA - TIER 4F - STAGE IV; SCANIA - STAGE V	Service packages	Hydraulic system	2582725
			Hydraulics	Service packages | Hydraulics	1 pc.	**First service | Replacement interval** 500 h | 2000 h	SCANIA - TIER 4F - STAGE IV; SCANIA - STAGE V	Service packages	Hydraulic system	2378001
MR 150 PRO	K063	32 - 32	Motor	Service packages | Diesel engine	1 pc.	**Replacement interval** 500 h	SCANIA - TIER 3 - STAGE IIIA	Service packages	Drive unit - engine	2362830
			Motor	Service packages | Diesel engine	1 pc.	**First service | Replacement interval** 500 h | 2000 h	SCANIA - TIER 3 - STAGE IIIA	Service packages	Drive unit - engine	2362836
			Hydraulics	Service packages | Hydraulics	1 pc.	**First service | Replacement interval** 500 h | 1000 h	SCANIA - TIER 3 - STAGE IIIA	Service packages	Hydraulic system	F10615349

FILTER SETS

Series code	Serial code	Series range	Type	Application	Requirement	Motor	Exhaust emission standard	Subassembly	Installation location	Part no.
MR 170 PRO	K033	202 - 9999		Service packages | Diesel engine	1 pc.	**First service | Replacement interval** 500 h | 2000 h	SCANIA - TIER 4F - STAGE IV	Service packages	Drive unit - engine	2635365
				Service packages | Diesel engine	1 pc.	**Replacement interval** 500 h	SCANIA - TIER 4F - STAGE IV	Service packages	Drive unit - engine	2635366
			Motor	Service packages | Diesel engine	1 pc.	**First service | Replacement interval** 500 h | 2000 h	SCANIA - LRC	Service packages	Drive unit - engine	2270760
			Motor	Service packages | Diesel engine	1 pc.	**Replacement interval** 500 h	SCANIA - LRC	Service packages	Drive unit - engine	2270758
			Hydraulics	Service packages | Hydraulics	1 pc.	**First service | Replacement interval** 500 h | 1000 h	SCANIA - TIER 4F - STAGE IV; SCANIA - LRC	Service packages	Hydraulic system	F10615349
MSS 352 EVO	K067	200 - 9999	Motor	Service packages | Diesel engine	1 pc.	**Replacement interval** 1500 h	CATERPILLAR - TIER 4F - STAGE IV - 95KW - S/N JKT…	Service packages	Drive unit - engine	2579518

MAINTENANCE PARTS

FILTER SETS										
Series code	Serial code	Series range	Type	Applic-ation	Re-quire-ment	Motor	Ex-haust emis-sion stand-ard	Su-basse-mbly	Install-ation loca-tion	Part no.
MSS 352 EVO	K067	200 - 9999		Service pack-ages | Diesel engine	1 pc.	**Re-place-ment interval** 250 h	CATER-PILLAR - STAGE V - 100KW - S/N J37…	Service pack-ages	Drive unit - engine	3067077
			Motor	Service pack-ages | Diesel engine	1 pc.	**Re-place-ment interval** 250 h	CATER-PILLAR - TIER 3 - STAGE IIIA - 98KW - FIXED SPEED - S/N W23...; CATER-PILLAR - TIER 3 - LRC - 95KW - S/N W23...	Service pack-ages	Drive unit - engine	2586324
			Motor	Service pack-ages | Diesel engine	1 pc.	**Re-place-ment interval** 1500 h	CATER-PILLAR - TIER 4I - STAGE IIIB - 75KW - S/N 448…; CATER-PILLAR - TIER 4I - STAGE IIIB - 95KW - S/N 448…	Service pack-ages	Drive unit - engine	2579332

FILTER SETS										
Series code	Serial code	Series range	Type	Application	Requirement	Motor	Exhaust emission standard	Subassembly	Installation location	Part no.
MSS 352 EVO	K067	200 - 9999	Motor	Service packages | Diesel engine	1 pc.	**Replacement interval** 250 h	CATERPILLAR - TIER 4I - STAGE IIIB - 75KW - S/N 448…; CATERPILLAR - TIER 4I - STAGE IIIB - 95KW - S/N 448…; CATERPILLAR - TIER 4F - STAGE IV - 95KW - S/N JKT…	Service packages	Drive unit - engine	2512756
			Motor	Service packages | Diesel engine	1 pc.	**Replacement interval** 250 h	CATERPILLAR - TIER 3 - STAGE IIIA - 75KW - S/N 446...	Service packages	Drive unit - engine	2304910
				Service packages | Diesel engine	1 pc.	**Replacement interval** 1000 h	CATERPILLAR - STAGE V - 100KW - S/N J37…	Service packages	Drive unit - engine	3074672
		1 - 9999	Motor	Service packages | Diesel engine	1 pc.	**Replacement interval** 250 h	CATERPILLAR - TIER 3 - LRC - 95KW - S/N 444...	Service packages	Drive unit - engine	2226637

MAINTENANCE PARTS

FILTER SETS										
Series code	Serial code	Series range	Type	Applic-ation	Re-quire-ment	Motor	Ex-haust emis-sion stand-ard	Su-basse-mbly	Install-ation loca-tion	Part no.
MSS 352 EVO	K067	200 - 9999	Motor	Service pack-ages | Diesel engine	1 pc.	**Re-place-ment interval** 250 h	JCB - TIER 3 - STAGE IIIA	Service pack-ages	Drive unit - engine	2226638
MSS 502 EVO	K066	200 - 9999		Service pack-ages | Diesel engine	1 pc.	**Re-place-ment interval** 1000 h	CATER-PILLAR - STAGE V - 100KW - S/N J37…	Service pack-ages	Drive unit - engine	3074672
			Motor	Service pack-ages | Diesel engine	1 pc.	**Re-place-ment interval** 1500 h	CATER-PILLAR - TIER 4I - STAGE IIIB - 75KW - S/N 448…; CATER-PILLAR - TIER 4I - STAGE IIIB - 95KW - S/N 448…	Service pack-ages	Drive unit - engine	2579332

FILTER SETS

Series code	Serial code	Series range	Type	Application	Requirement	Motor	Exhaust emission standard	Subassembly	Installation location	Part no.
MSS 502 EVO	K066	200 - 9999	Motor	Service packages | Diesel engine	1 pc.	**Replacement interval** 250 h	CATERPILLAR - TIER 4I - STAGE IIIB - 75KW - S/N 448…; CATERPILLAR - TIER 4I - STAGE IIIB - 95KW - S/N 448…; CATERPILLAR - TIER 4F - STAGE IV - 95KW - S/N JKT…	Service packages	Drive unit - engine	2512756
			Motor	Service packages | Diesel engine	1 pc.	**Replacement interval** 250 h	CATERPILLAR - TIER 3 - STAGE IIIA - 75KW - S/N 446...	Service packages	Drive unit - engine	2304910
		1 - 9999	Motor	Service packages | Diesel engine	1 pc.	**Replacement interval** 250 h	CATERPILLAR - TIER 3 - LRC - 95KW - S/N 444...	Service packages	Drive unit - engine	2226637
		200 - 9999		Service packages | Diesel engine	1 pc.	**Replacement interval** 250 h	CATERPILLAR - STAGE V - 100KW - S/N J37…	Service packages	Drive unit - engine	3067077

MAINTENANCE PARTS

FILTER SETS										
Series code	Serial code	Series range	Type	Application	Requirement	Motor	Exhaust emission standard	Subassembly	Installation location	Part no.
MSS 502 EVO	K066	200 - 9999	Motor	Service packages | Diesel engine	1 pc.	**Replacement interval** 250 h	CATERPILLAR - TIER 3 - STAGE IIIA - 98KW - FIXED SPEED - S/N W23...; CATERPILLAR - TIER 3 - LRC - 95KW - S/N W23...	Service packages	Drive unit - engine	2586324
			Motor	Service packages | Diesel engine	1 pc.	**Replacement interval** 1500 h	CATERPILLAR - TIER 4F - STAGE IV - 95KW - S/N JKT...	Service packages	Drive unit - engine	2579518
MS 14 Z	K068	200 - 9999	Motor	Service packages | Diesel engine	1 pc.	**Replacement interval** 250 h	CATERPILLAR - TIER 3 - LRC - 95KW - S/N W23...; CATERPILLAR - TIER 3 - STAGE IIIA - 98KW - FIXED SPEED - S/N W23...	Service packages	Drive unit - engine	2586324
		1 - 9999	Motor	Service packages | Diesel engine	1 pc.	**Replacement interval** 250 h	CATERPILLAR - TIER 4I - STAGE IIIB - 95KW - S/N 448...	Service packages	Drive unit - engine	2579332

FILTER SETS

Series code	Serial code	Series range	Type	Application	Requirement	Motor	Exhaust emission standard	Subassembly	Installation location	Part no.
MS 14 Z	K068	200 - 9999	Motor	Service packages | Diesel engine	1 pc.	**Replacement interval** 250 h	CATERPILLAR - TIER 3 - STAGE IIIA - 75KW - S/N 446...	Service packages	Drive unit - engine	2304910
			Motor	Service packages | Diesel engine	1 pc.	**Replacement interval** 250 h	CATERPILLAR - TIER 4F - STAGE IV - 75KW - S/N JKT...	Service packages	Drive unit - engine	2512756
			Motor	Service packages | Diesel engine	1 pc.	**Replacement interval** 1500 h	CATERPILLAR - TIER 4F - STAGE IV - 75KW - S/N JKT...	Service packages	Drive unit - engine	2579518
		1 - 9999	Motor	Service packages | Diesel engine	1 pc.	**Replacement interval** 250 h	CATERPILLAR - TIER 3 - LRC - 95KW - S/N 444...	Service packages	Drive unit - engine	2226637
MS 16 Z	K048	200 - 9999	Motor	Service packages | Diesel engine	1 pc.	**Replacement interval** 250 h	CATERPILLAR - TIER 2 - STAGE II - S/N 334...	Service packages	Drive unit - engine	2226635
			Motor	Service packages | Diesel engine	1 pc.	**Replacement interval** 250 h	CATERPILLAR - TIER 3 - STAGE IIIA - 75KW - S/N 446...	Service packages	Drive unit - engine	2304910

MAINTENANCE PARTS

FILTER SETS										
Series code	Serial code	Series range	Type	Application	Requirement	Motor	Exhaust emission standard	Subassembly	Installation location	Part no.
MS 16 Z	K048	200 - 9999	Motor	Service packages | Diesel engine	1 pc.	**Replacement interval** 250 h	CATERPILLAR - TIER 3 - LRC - 95KW - S/N 444...	Service packages	Drive unit - engine	2226637
			Motor	Service packages | Diesel engine	1 pc.	**Replacement interval** 1500 h	CATERPILLAR - TIER 4F - STAGE IV - 75KW - S/N JKT...; CATERPILLAR - TIER 4F - STAGE IV - 95KW - S/N JKT...	Service packages	Drive unit - engine	2579518
			Motor	Service packages | Diesel engine	1 pc.	**Replacement interval** 1500 h	CATERPILLAR - TIER 4I - STAGE IIIB - 75KW - S/N 448...; CATERPILLAR - TIER 4I - STAGE IIIB - 95KW - S/N 448...	Service packages	Drive unit - engine	2579332

FILTER SETS

Series code	Serial code	Series range	Type	Application	Requirement	Motor	Exhaust emission standard	Subassembly	Installation location	Part no.
MS 16 Z	K048	200 - 9999	Motor	Service packages | Diesel engine	1 pc.	**Replacement interval** 250 h	CATERPILLAR - TIER 4I - STAGE IIIB - 75KW - S/N 448…; CATERPILLAR - TIER 4I - STAGE IIIB - 95KW - S/N 448…; CATERPILLAR - TIER 4F - STAGE IV - 75KW - S/N JKT…; CATERPILLAR - TIER 4F - STAGE IV - 95KW - S/N JKT…	Service packages	Drive unit - engine	2512756
			Motor	Service packages | Diesel engine	1 pc.	**Replacement interval** 250 h	CATERPILLAR - TIER 3 - LRC - 95KW - S/N W23...; CATERPILLAR - TIER 3 - STAGE IIIA - 98KW - FIXED SPEED - S/N W23...	Service packages	Drive unit - engine	2586324

MAINTENANCE PARTS

FILTER SETS										
Series code	Serial code	Series range	Type	Applic-ation	Re-quire-ment	Motor	Ex-haust emis-sion stand-ard	Su-basse-mbly	Install-ation loca-tion	Part no.
MS 16 D	K049	200 - 9999	Motor	Service pack-ages | Diesel engine	1 pc.	**Re-place-ment interval** 250 h	CATER-PILLAR - TIER 2 - STAGE II - S/N 334...	Service pack-ages	Drive unit - engine	2226635
			Motor	Service pack-ages | Diesel engine	1 pc.	**Re-place-ment interval** 250 h	CATER-PILLAR - TIER 3 - STAGE IIIA - 75KW - S/N 446...	Service pack-ages	Drive unit - engine	2304910
			Motor	Service pack-ages | Diesel engine	1 pc.	**Re-place-ment interval** 250 h	CATER-PILLAR - TIER 3 - LRC - 95KW - S/N 444...	Service pack-ages	Drive unit - engine	2226637
			Motor	Service pack-ages | Diesel engine	1 pc.	**Re-place-ment interval** 250 h	CATER-PILLAR - TIER 3 - LRC - 95KW - S/N W23...; CATER-PILLAR - TIER 3 - STAGE IIIA - 98KW - FIXED SPEED - S/N W23...	Service pack-ages	Drive unit - engine	2586324

FILTER SETS										
Series code	Serial code	Series range	Type	Application	Requirement	Motor	Exhaust emission standard	Subassembly	Installation location	Part no.
MS 16 D	K049	200 - 9999	Motor	Service packages | Diesel engine	1 pc.	**Replacement interval** 1500 h	CATERPILLAR - TIER 4I - STAGE IIIB - 75KW - S/N 448…; CATERPILLAR - TIER 4I - STAGE IIIB - 95KW - S/N 448…	Service packages	Drive unit - engine	2579332
			Motor	Service packages | Diesel engine	1 pc.	**Replacement interval** 1500 h	CATERPILLAR - TIER 4F - STAGE IV - 95KW - S/N JKT…	Service packages	Drive unit - engine	2579518
			Motor	Service packages | Diesel engine	1 pc.	**Replacement interval** 250 h	CATERPILLAR - TIER 4I - STAGE IIIB - 75KW - S/N 448…; CATERPILLAR - TIER 4F - STAGE IV - 95KW - S/N JKT…; CATERPILLAR - TIER 4I - STAGE IIIB - 95KW - S/N 448…	Service packages	Drive unit - engine	2512756

MAINTENANCE PARTS

FILTER SETS										
Series code	Serial code	Series range	Type	Application	Requirement	Motor	Exhaust emission standard	Subassembly	Installation location	Part no.
MS 19 Z	K054	200 - 9999	Motor	Service packages | Diesel engine	1 pc.	**Replacement interval** 250 h	CATERPILLAR - TIER 3 - LRC - 95KW - S/N 444...	Service packages	Drive unit - engine	2226637
			Motor	Service packages | Diesel engine	1 pc.	**Replacement interval** 250 h	CATERPILLAR - TIER 2 - STAGE II - S/N 334...	Service packages	Drive unit - engine	2226635
			Motor	Service packages | Diesel engine	1 pc.	**Replacement interval** 1500 h	CATERPILLAR - TIER 4I - STAGE IIIB - 95KW - S/N 448…	Service packages	Drive unit - engine	2579332
			Motor	Service packages | Diesel engine	1 pc.	**Replacement interval** 250 h	CATERPILLAR - TIER 3 - LRC - 95KW - S/N W23...; CATERPILLAR - TIER 3 - STAGE IIIA - 98KW - FIXED SPEED - S/N W23...	Service packages	Drive unit - engine	2586324

FILTER SETS										
Series code	Serial code	Series range	Type	Application	Requirement	Motor	Exhaust emission standard	Subassembly	Installation location	Part no.
MS 19 Z	K054	200 - 9999	Motor	Service packages | Diesel engine	1 pc.	**Replacement interval** 250 h	CATERPILLAR - TIER 4F - STAGE IV - 95KW - S/N JKT…; CATERPILLAR - TIER 4I - STAGE IIIB - 95KW - S/N 448…	Service packages	Drive unit - engine	2512756
			Motor	Service packages | Diesel engine	1 pc.	**Replacement interval** 1500 h	CATERPILLAR - TIER 4F - STAGE IV - 95KW - S/N JKT…	Service packages	Drive unit - engine	2579518
MS 19 D	K055	200 - 9999	Motor	Service packages | Diesel engine	1 pc.	**Replacement interval** 1500 h	CATERPILLAR - TIER 4I - STAGE IIIB - 95KW - S/N 448…	Service packages	Drive unit - engine	2579332
			Motor	Service packages | Diesel engine	1 pc.	**Replacement interval** 1500 h	CATERPILLAR - TIER 4F - STAGE IV - 95KW - S/N JKT…	Service packages	Drive unit - engine	2579518

FILTER SETS										
Series code	Serial code	Series range	Type	Application	Requirement	Motor	Exhaust emission standard	Subassembly	Installation location	Part no.
MS 19 D	K055	200 - 9999	Motor	Service packages | Diesel engine	1 pc.	**Replacement interval** 250 h	CATERPILLAR - TIER 4F - STAGE IV - 95KW - S/N JKT...; CATERPILLAR - TIER 4I - STAGE IIIB - 95KW - S/N 448...	Service packages	Drive unit - engine	2512756
			Motor	Service packages | Diesel engine	1 pc.	**Replacement interval** 250 h	CATERPILLAR - TIER 3 - LRC - 95KW - S/N 444...	Service packages	Drive unit - engine	2226637
			Motor	Service packages | Diesel engine	1 pc.	**Replacement interval** 250 h	CATERPILLAR - TIER 3 - LRC - 95KW - S/N W23...; CATERPILLAR - TIER 3 - STAGE IIIA - 98KW - FIXED SPEED - S/N W23...	Service packages	Drive unit - engine	2586324
			Motor	Service packages | Diesel engine	1 pc.	**Replacement interval** 250 h	CATERPILLAR - TIER 2 - STAGE II - S/N 334...	Service packages	Drive unit - engine	2226635

FILTER SETS

Series code	Serial code	Series range	Type	Application	Requirement	Motor	Exhaust emission standard	Subassembly	Installation location	Part no.
MSS 1102 PRO	K076	1 - 9999	Motor	Service packages | Diesel engine	1 pc.	**Replacement interval** 1500 h	CATERPILLAR - TIER 4F - STAGE IV - 165KW - S/N 881…	Service packages	Drive unit - engine	2582753
			Motor	Service packages | Diesel engine	1 pc.	**Replacement interval** 1500 h	CATERPILLAR - TIER 4I - STAGE IIIB - 165KW - S/N 770…	Service packages	Drive unit - engine	2582746
			Motor	Service packages | Diesel engine	1 pc.	**Replacement interval** 500 h	CATERPILLAR - TIER 4I - STAGE IIIB - 165KW - S/N 770…; CATERPILLAR - TIER 4F - STAGE IV - 165KW - S/N 881…	Service packages	Drive unit - engine	2512758
			Motor	Service packages | Diesel engine	1 pc.	**Replacement interval** 250 h	CATERPILLAR - TIER 3 - STAGE IIIA - 165KW - S/N 666…	Service packages	Drive unit - engine	2325954
				Service packages | Diesel engine	1 pc.	**Replacement interval** 1500 h	CATERPILLAR - TIER 4F - STAGE V - 168KW - S/N 6J6…	Service packages	Drive unit - engine	3027331

MAINTENANCE PARTS

FILTER SETS

Series code	Serial code	Series range	Type	Application	Requirement	Motor	Exhaust emission standard	Subassembly	Installation location	Part no.
MSS 1102 PRO	K076	1 - 9999	Motor	Service packages | Diesel engine	1 pc.	**Replacement interval** 500 h	CATERPILLAR - TIER 3 - LRC - 165KW - S/N G9R…; CATERPILLAR - TIER 3 - STAGE IIIA - 206KW - FIXED SPEED - S/N G9R…	Service packages	Drive unit - engine	2586325
				Service packages | Diesel engine	1 pc.	**Replacement interval** 1500 h	CATERPILLAR - TIER 4I - STAGE IIIB - 165KW - S/N 770…	Service packages	Drive unit - engine	2959162
				Service packages | Diesel engine	1 pc.	**Replacement interval** 1500 h	CATERPILLAR - TIER 4F - STAGE IV - 165KW - S/N 881…	Service packages	Drive unit - engine	2959164
				Service packages | Diesel engine	1 pc.	**Replacement interval** 500 h	CATERPILLAR - TIER 3 - LRC - 165KW - S/N G9R…; CATERPILLAR - TIER 3 - STAGE IIIA - 206KW - FIXED SPEED - S/N G9R…	Service packages	Drive unit - engine	2959158

FILTER SETS

Series code	Serial code	Series range	Type	Application	Requirement	Motor	Exhaust emission standard	Subassembly	Installation location	Part no.
MSS 1102 PRO	K076	1 - 9999		Service packages | Diesel engine	1 pc.	**Replacement interval** 500 h	CATERPILLAR - TIER 4F - STAGE V - 168KW - S/N 6J6…	Service packages	Drive unit - engine	WX3014238
				Service packages | Diesel engine	1 pc.	**Replacement interval** 500 h	CATERPILLAR - TIER 4I - STAGE IIIB - 165KW - S/N 770…; CATERPILLAR - TIER 4F - STAGE IV - 165KW - S/N 881…	Service packages	Drive unit - engine	2959178
MSC 702 EVO	K083	10 - 15	Hydraulics	Service packages | Hydraulics	1 pc.	**First service | Replacement interval** 500 h | 1000 h	DEUTZ - TIER 3 - STAGE IIIA	Service packages	Hydraulic system	2470325
		10 - 16	Motor	Service packages | Diesel engine	1 pc.	**Replacement interval** 250 h	DEUTZ - TIER 3 - STAGE IIIA	Service packages	Drive unit - engine	2564705
			Motor	Service packages | Diesel engine	1 pc.	**Replacement interval** 1000 h	DEUTZ - TIER 3 - STAGE IIIA	Service packages	Drive unit - engine	2564715

MAINTENANCE PARTS

FILTER SETS

Series code	Serial code	Series range	Type	Application	Requirement	Motor	Exhaust emission standard	Subassembly	Installation location	Part no.
MSC 702 EVO	K083	16 - 16	Hydraulics	Service packages | Hydraulics	1 pc.	**First service | Replacement interval** 500 h | 1000 h	DEUTZ - TIER 3 - STAGE IIIA	Service packages	Hydraulic system	2594581
		17 - 17	Hydraulics	Service packages | Hydraulics	1 pc.	**First service | Replacement interval** 500 h | 1000 h	DEUTZ - TIER 3 - STAGE IIIA	Service packages	Hydraulic system	2470325
		17 - 131	Motor	Service packages | Diesel engine	1 pc.	**Replacement interval** 1000 h	DEUTZ - TIER 3 - STAGE IIIA	Service packages	Drive unit - engine	2565167
			Motor	Service packages | Diesel engine	1 pc.	**Replacement interval** 250 h	DEUTZ - TIER 3 - STAGE IIIA	Service packages	Drive unit - engine	2565165
		18 - 9999	Hydraulics	Service packages | Hydraulics	1 pc.	**First service | Replacement interval** 500 h | 1000 h	DEUTZ - TIER 3 - STAGE IIIA	Service packages	Hydraulic system	2594581
		126 - 9999		Service packages | Diesel engine	1 pc.	**Replacement interval** 500 h	JOHN DEERE - STAGE IIIA	Service packages	Drive unit - engine	3017440
				Service packages | Diesel engine	1 pc.	**First service | Replacement interval** 500 h | 2000 h	JOHN DEERE - STAGE IIIA	Service packages	Drive unit - engine	3017441

Due to possible technical changes, always refer to the information in the instruction manual.

FILTER SETS

Series code	Serial code	Series range	Type	Application	Requirement	Motor	Exhaust emission standard	Subassembly	Installation location	Part no.
MSC 702 EVO	K083	126 - 9999	Hydraulics	Service packages | Hydraulics	1 pc.	**First service | Replacement interval** 500 h | 1000 h	JOHN DEERE - STAGE IIIA	Service packages	Hydraulic system	2594581
MSC 702i EVO	K103	10 - 11	Motor	Service packages | Diesel engine	1 pc.	**Replacement interval** 1000 h	DEUTZ - TIER 4F - STAGE IV	Service packages	Drive unit - engine	2547726
			Motor	Service packages | Diesel engine	1 pc.	**Replacement interval** 250 h	DEUTZ - TIER 4F - STAGE IV	Service packages	Drive unit - engine	2547725
			Hydraulics	Service packages | Hydraulics	1 pc.	**First service | Replacement interval** 500 h | 1000 h	DEUTZ - TIER 4F - STAGE IV	Service packages	Hydraulic system	2470325
		12 - 70	Motor	Service packages | Diesel engine	1 pc.	**Replacement interval** 1000 h	DEUTZ - TIER 4F - STAGE IV	Service packages	Drive unit - engine	2564711
			Motor	Service packages | Diesel engine	1 pc.	**Replacement interval** 250 h	DEUTZ - TIER 4F - STAGE IV	Service packages	Drive unit - engine	2564707
		12 - 9999	Hydraulics	Service packages | Hydraulics	1 pc.	**First service | Replacement interval** 500 h | 1000 h	DEUTZ - TIER 4F - STAGE IV	Service packages	Hydraulic system	2594581

MAINTENANCE PARTS

FILTER SETS										
Series code	Serial code	Series range	Type	Application	Requirement	Motor	Exhaust emission standard	Subassembly	Installation location	Part no.
MSC 702i EVO	K103	45 - 9999		Service packages | Diesel engine	1 pc.	**Replacement interval** 500 h	JOHN DEERE - STAGE V	Service packages	Drive unit - engine	3017435
				Service packages | Diesel engine	1 pc.	**Replacement interval** 1500 h	JOHN DEERE - STAGE V	Service packages	Drive unit - engine	3017436
				Service packages | Diesel engine	1 pc.	**Replacement interval** 3000 h	JOHN DEERE - STAGE V	Service packages	Drive unit - engine	3017439
			Hydraulics	Service packages | Hydraulics	1 pc.	**First service | Replacement interval** 500 h | 1000 h	JOHN DEERE - STAGE V	Service packages	Hydraulic system	2594581
MSC 703 EVO	K084	10 - 32	Motor	Service packages | Diesel engine	1 pc.	**Replacement interval** 250 h	DEUTZ - TIER 3 - STAGE IIIA	Service packages	Drive unit - engine	2564705
			Motor	Service packages | Diesel engine	1 pc.	**Replacement interval** 1000 h	DEUTZ - TIER 3 - STAGE IIIA	Service packages	Drive unit - engine	2564715
		10 - 34	Hydraulics	Service packages | Hydraulics	1 pc.	**First service | Replacement interval** 500 h | 1000 h	DEUTZ - TIER 3 - STAGE IIIA	Service packages	Hydraulic system	2470325

FILTER SETS

Series code	Serial code	Series range	Type	Application	Requirement	Motor	Exhaust emission standard	Subassembly	Installation location	Part no.
MSC 703 EVO	K084	33 - 201	Motor	Service packages | Diesel engine	1 pc.	**Replacement interval** 250 h	DEUTZ - TIER 3 - STAGE IIIA	Service packages	Drive unit - engine	2565165
			Motor	Service packages | Diesel engine	1 pc.	**Replacement interval** 1000 h	DEUTZ - TIER 3 - STAGE IIIA	Service packages	Drive unit - engine	2565167
		35 - 9999	Hydraulics	Service packages | Hydraulics	1 pc.	**First service | Replacement interval** 500 h | 1000 h	DEUTZ - TIER 3 - STAGE IIIA	Service packages	Hydraulic system	2594581
		197 - 9999		Service packages | Diesel engine	1 pc.	**Replacement interval** 500 h	JOHN DEERE - STAGE IIIA	Service packages	Drive unit - engine	3017440
				Service packages | Diesel engine	1 pc.	**First service | Replacement interval** 500 h | 2000 h	JOHN DEERE - STAGE IIIA	Service packages	Drive unit - engine	3017441
			Hydraulics	Service packages | Hydraulics	1 pc.	**First service | Replacement interval** 500 h | 1000 h	JOHN DEERE - STAGE IIIA	Service packages	Hydraulic system	2594581
MSC 703i EVO	K104	10 - 11	Hydraulics	Service packages | Hydraulics	1 pc.	**First service | Replacement interval** 500 h | 1000 h	DEUTZ - TIER 4F - STAGE IV	Service packages	Hydraulic system	2470325

MAINTENANCE PARTS

FILTER SETS

Series code	Serial code	Series range	Type	Application	Requirement	Motor	Exhaust emission standard	Subassembly	Installation location	Part no.
MSC 703i EVO	K104	10 - 12	Motor	Service packages | Diesel engine	1 pc.	**Replacement interval** 1000 h	DEUTZ - TIER 4F - STAGE IV	Service packages	Drive unit - engine	2547726
			Motor	Service packages | Diesel engine	1 pc.	**Replacement interval** 250 h	DEUTZ - TIER 4F - STAGE IV	Service packages	Drive unit - engine	2547725
		12 - 12	Hydraulics	Service packages | Hydraulics	1 pc.	**First service | Replacement interval** 500 h | 1000 h	DEUTZ - TIER 4F - STAGE IV	Service packages	Hydraulic system	2594581
		13 - 13	Hydraulics	Service packages | Hydraulics	1 pc.	**First service | Replacement interval** 500 h | 1000 h	DEUTZ - TIER 4F - STAGE IV	Service packages	Hydraulic system	2470325
		13 - 56	Motor	Service packages | Diesel engine	1 pc.	**Replacement interval** 250 h	DEUTZ - TIER 4F - STAGE IV	Service packages	Drive unit - engine	2564707
			Motor	Service packages | Diesel engine	1 pc.	**Replacement interval** 1000 h	DEUTZ - TIER 4F - STAGE IV	Service packages	Drive unit - engine	2564711
		14 - 9999	Hydraulics	Service packages | Hydraulics	1 pc.	**First service | Replacement interval** 500 h | 1000 h	DEUTZ - TIER 4F - STAGE IV	Service packages	Hydraulic system	2594581

FILTER SETS

Series code	Serial code	Series range	Type	Application	Requirement	Motor	Exhaust emission standard	Subassembly	Installation location	Part no.
MSC 703i EVO	K104	39 - 9999		Service packages | Diesel engine	1 pc.	**Replacement interval** 500 h	JOHN DEERE - STAGE V	Service packages	Drive unit - engine	3017435
				Service packages | Diesel engine	1 pc.	**Replacement interval** 1500 h	JOHN DEERE - STAGE V	Service packages	Drive unit - engine	3017436
				Service packages | Diesel engine	1 pc.	**Replacement interval** 3000 h	JOHN DEERE - STAGE V	Service packages	Drive unit - engine	3017439
			Hydraulics	Service packages | Hydraulics	1 pc.	**First service | Replacement interval** 500 h | 1000 h	JOHN DEERE - STAGE V	Service packages	Hydraulic system	2594581
MSC 952 EVO	K085	10 - 15	Motor	Service packages | Diesel engine	1 pc.	**Replacement interval** 250 h	DEUTZ - TIER 3 - STAGE IIIA	Service packages	Drive unit - engine	2564705
			Motor	Service packages | Diesel engine	1 pc.	**Replacement interval** 1000 h	DEUTZ - TIER 3 - STAGE IIIA	Service packages	Drive unit - engine	2564715
		10 - 16	Hydraulics	Service packages | Hydraulics	1 pc.	**First service | Replacement interval** 500 h | 1000 h	DEUTZ - TIER 3 - STAGE IIIA	Service packages	Hydraulic system	2470325

MAINTENANCE PARTS

FILTER SETS

Series code	Serial code	Series range	Type	Application	Requirement	Motor	Exhaust emission standard	Subassembly	Installation location	Part no.
MSC 952 EVO	K085	16 - 152	Motor	Service packages | Diesel engine	1 pc.	**Replacement interval** 1000 h	DEUTZ - TIER 3 - STAGE IIIA	Service packages	Drive unit - engine	2565167
			Motor	Service packages | Diesel engine	1 pc.	**Replacement interval** 250 h	DEUTZ - TIER 3 - STAGE IIIA	Service packages	Drive unit - engine	2565165
		17 - 9999	Hydraulics	Service packages | Hydraulics	1 pc.	**First service | Replacement interval** 500 h | 1000 h	DEUTZ - TIER 3 - STAGE IIIA	Service packages	Hydraulic system	2594581
		153 - 9999		Service packages | Diesel engine	1 pc.	**Replacement interval** 500 h	JOHN DEERE - STAGE IIIA	Service packages	Drive unit - engine	3017440
				Service packages | Diesel engine	1 pc.	**First service | Replacement interval** 500 h | 2000 h	JOHN DEERE - STAGE IIIA	Service packages	Drive unit - engine	3017441
			Hydraulics	Service packages | Hydraulics	1 pc.	**First service | Replacement interval** 500 h | 1000 h	JOHN DEERE - STAGE IIIA	Service packages	Hydraulic system	2594581
MSC 952i EVO	K105	10 - 11	Motor	Service packages | Diesel engine	1 pc.	**Replacement interval** 1000 h	DEUTZ - TIER 4F - STAGE IV	Service packages	Drive unit - engine	2547726

FILTER SETS

Series code	Serial code	Series range	Type	Application	Requirement	Motor	Exhaust emission standard	Subassembly	Installation location	Part no.
MSC 952i EVO	K105	10 - 11	Motor	Service packages | Diesel engine	1 pc.	**Replacement interval** 500 h	DEUTZ - TIER 4F - STAGE IV	Service packages	Drive unit - engine	2547725
			Hydraulics	Service packages | Hydraulics	1 pc.	**First service | Replacement interval** 500 h | 1000 h	DEUTZ - TIER 4F - STAGE IV	Service packages	Hydraulic system	2470325
		12 - 66	Motor	Service packages | Diesel engine	1 pc.	**Replacement interval** 1000 h	DEUTZ - TIER 4F - STAGE V	Service packages	Drive unit - engine	2660526
			Motor	Service packages | Diesel engine	1 pc.	**Replacement interval** 500 h	DEUTZ - TIER 4F - STAGE V	Service packages	Drive unit - engine	2660523
			Hydraulics	Service packages | Hydraulics	1 pc.	**First service | Replacement interval** 500 h | 1000 h	DEUTZ - TIER 4F - STAGE V	Service packages	Hydraulic system	2594581
		51 - 9999		Service packages | Diesel engine	1 pc.	**Replacement interval** 3000 h	JOHN DEERE - STAGE V	Service packages	Drive unit - engine	3017439
				Service packages | Diesel engine	1 pc.	**Replacement interval** 1500 h	JOHN DEERE - STAGE V	Service packages	Drive unit - engine	3017436

MAINTENANCE PARTS

FILTER SETS										
Series code	Serial code	Series range	Type	Application	Requirement	Motor	Exhaust emission standard	Subassembly	Installation location	Part no.
MSC 952i EVO	K105	51 - 9999		Service packages | Diesel engine	1 pc.	**Replacement interval** 500 h	JOHN DEERE - STAGE V	Service packages	Drive unit - engine	3017435
			Hydraulics	Service packages | Hydraulics	1 pc.	**First service | Replacement interval** 500 h | 1000 h	JOHN DEERE - STAGE V	Service packages	Hydraulic system	2594581
MSC 953 EVO	K086	10 - 41	Motor	Service packages | Diesel engine	1 pc.	**Replacement interval** 250 h	DEUTZ - TIER 3 - STAGE IIIA	Service packages	Drive unit - engine	2564705
			Motor	Service packages | Diesel engine	1 pc.	**Replacement interval** 1000 h	DEUTZ - TIER 3 - STAGE IIIA	Service packages	Drive unit - engine	2564715
			Hydraulics	Service packages | Hydraulics	1 pc.	**First service | Replacement interval** 500 h | 1000 h	DEUTZ - TIER 3 - STAGE IIIA	Service packages	Hydraulic system	2470325
		40 - 40	Motor	Service packages | Diesel engine	1 pc.	**First service | Replacement interval** 500 h | 500 h	DEUTZ - TIER 4F - STAGE IV	Service packages	Drive unit - engine	2547725
			Motor	Service packages | Diesel engine	1 pc.	**Replacement interval** 1000 h	DEUTZ - TIER 4F - STAGE IV	Service packages	Drive unit - engine	2547726

FILTER SETS

Series code	Serial code	Series range	Type	Application	Requirement	Motor	Exhaust emission standard	Subassembly	Installation location	Part no.
MSC 953 EVO	K086	40 - 40	Hydraulics	Service packages | Hydraulics	1 pc.	**First service | Replacement interval** 500 h | 1000 h	DEUTZ - TIER 4F - STAGE IV	Service packages	Hydraulic system	2470325
		42 - 43	Hydraulics	Service packages | Hydraulics	1 pc.	**First service | Replacement interval** 500 h | 1000 h	DEUTZ - TIER 3 - STAGE IIIA	Service packages	Hydraulic system	2594581
		42 - 515	Motor	Service packages | Diesel engine	1 pc.	**Replacement interval** 1000 h	DEUTZ - TIER 3 - STAGE IIIA	Service packages	Drive unit - engine	2565167
			Motor	Service packages | Diesel engine	1 pc.	**Replacement interval** 250 h	DEUTZ - TIER 3 - STAGE IIIA	Service packages	Drive unit - engine	2565165
		44 - 49	Hydraulics	Service packages | Hydraulics	1 pc.	**First service | Replacement interval** 500 h | 1000 h	DEUTZ - TIER 3 - STAGE IIIA	Service packages	Hydraulic system	2470325
		50 - 9999	Hydraulics	Service packages | Hydraulics	1 pc.	**First service | Replacement interval** 500 h | 1000 h	DEUTZ - TIER 3 - STAGE IIIA	Service packages	Hydraulic system	2594581
		349 - 9999		Service packages | Diesel engine	1 pc.	**Replacement interval** 500 h	JOHN DEERE - STAGE IIIA	Service packages	Drive unit - engine	3017440

Due to possible technical changes, always refer to the information in the instruction manual.

MAINTENANCE PARTS

FILTER SETS

Series code	Serial code	Series range	Type	Application	Requirement	Motor	Exhaust emission standard	Subassembly	Installation location	Part no.
MSC 953 EVO	K086	349 - 9999		Service packages | Diesel engine	1 pc.	**First service | Replacement interval** 500 h | 2000 h	JOHN DEERE - STAGE IIIA	Service packages	Drive unit - engine	3017441
			Hydraulics	Service packages | Hydraulics	1 pc.	**First service | Replacement interval** 500 h | 1000 h	JOHN DEERE - STAGE IIIA	Service packages	Hydraulic system	2594581
MSC 953i EVO	K106	10 - 11	Hydraulics	Service packages | Hydraulics	1 pc.	**First service | Replacement interval** 500 h | 1000 h	DEUTZ - TIER 4F - STAGE IV	Service packages	Hydraulic system	2470325
		10 - 13	Motor	Service packages | Diesel engine	1 pc.	**Replacement interval** 1000 h	DEUTZ - TIER 4F - STAGE IV	Service packages	Drive unit - engine	2547726
			Motor	Service packages | Diesel engine	1 pc.	**Replacement interval** 500 h	DEUTZ - TIER 4F - STAGE IV	Service packages	Drive unit - engine	2547725
		12 - 12	Hydraulics	Service packages | Hydraulics	1 pc.	**First service | Replacement interval** 500 h | 1000 h	DEUTZ - TIER 4F - STAGE IV	Service packages	Hydraulic system	2594581

FILTER SETS

Series code	Serial code	Series range	Type	Application	Requirement	Motor	Exhaust emission standard	Subassembly	Installation location	Part no.
MSC 953i EVO	K106	13 - 13	Hydraulics	Service packages | Hydraulics	1 pc.	**First service | Replacement interval** 500 h | 1000 h	DEUTZ - TIER 4F - STAGE IV	Service packages	Hydraulic system	2470325
		14 - 111	Motor	Service packages | Diesel engine	1 pc.	**Replacement interval** 1000 h	DEUTZ - TIER 4F - STAGE V	Service packages	Drive unit - engine	2660526
			Motor	Service packages | Diesel engine	1 pc.	**Replacement interval** 500 h	DEUTZ - TIER 4F - STAGE V	Service packages	Drive unit - engine	2660523
		14 - 9999	Hydraulics	Service packages | Hydraulics	1 pc.	**First service | Replacement interval** 500 h | 1000 h	DEUTZ - TIER 4F - STAGE V	Service packages	Hydraulic system	2594581
		76 - 12	Hydraulics	Service packages | Hydraulics	1 pc.	**First service | Replacement interval** 500 h | 1000 h	JOHN DEERE - STAGE V	Service packages	Hydraulic system	2594581
		76 - 9999		Service packages | Diesel engine	1 pc.	**Replacement interval** 3000 h	JOHN DEERE - STAGE V	Service packages	Drive unit - engine	3017439
				Service packages | Diesel engine	1 pc.	**Replacement interval** 500 h	JOHN DEERE - STAGE V	Service packages	Drive unit - engine	3017435

MAINTENANCE PARTS

FILTER SETS

Series code	Serial code	Series range	Type	Application	Requirement	Motor	Exhaust emission standard	Subassembly	Installation location	Part no.
MSC 953i EVO	K106	76 - 9999		Service packages | Diesel engine	1 pc.	**Replacement interval** 1500 h	JOHN DEERE - STAGE V	Service packages	Drive unit - engine	3017436
			Hydraulics	Service packages | Hydraulics	1 pc.	**First service | Replacement interval** 500 h | 1000 h	JOHN DEERE - STAGE V	Service packages	Hydraulic system	2594581
MC 110 EVO	K116	1 - 9999	Motor	Service packages | Diesel engine	1 pc.	**First service | Replacement interval** 500 h | 2000 h	SCANIA - TIER 3 - STAGE IIIA	Service packages	Drive unit - engine	2270762
			Motor	Service packages | Diesel engine	1 pc.	**Replacement interval** 500 h	SCANIA - LRC	Service packages	Drive unit - engine	2403247
			Motor	Service packages | Diesel engine	1 pc.	**First service | Replacement interval** 500 h | 2000 h	SCANIA - LRC	Service packages	Drive unit - engine	2403244
			Motor	Service packages | Diesel engine	1 pc.	**Replacement interval** 500 h	SCANIA - TIER 3 - STAGE IIIA	Service packages	Drive unit - engine	2270763
				Service packages | Hydraulics	1 pc.	**Replacement interval** 1000 h	SCANIA - TIER 3 - STAGE IIIA; SCANIA - LRC	Service packages	Hydraulic system	3080308

Due to possible technical changes, always refer to the information in the instruction manual.

FILTER SETS

Series code	Serial code	Series range	Type	Application	Requirement	Motor	Exhaust emission standard	Subassembly	Installation location	Part no.
MC 110 EVO	K116	1 - 9999		Service packages | Hydraulics	1 pc.	**First service | Replacement interval** 500 h | 2000 h	SCANIA - TIER 3 - STAGE IIIA; SCANIA - LRC	Service packages	Hydraulic system	3080309
MCO 90 EVO	K120	1 - 9999	Motor	Service packages | Diesel engine	1 pc.	**First service | Replacement interval** 500 h | 2000 h	SCANIA - TIER 3 - STAGE IIIA	Service packages	Drive unit - engine	2270762
			Motor	Service packages | Diesel engine	1 pc.	**Replacement interval** 500 h	SCANIA - TIER 3 - STAGE IIIA	Service packages	Drive unit - engine	2270763
			Motor	Service packages | Diesel engine	1 pc.	**First service | Replacement interval** 500 h | 2000 h	SCANIA - TIER 3 - STAGE IIIA; SCANIA - LRC	Service packages	Drive unit - engine	2403247
			Motor	Service packages | Diesel engine	1 pc.	**Replacement interval** 500 h	SCANIA - TIER 3 - STAGE IIIA; SCANIA - LRC	Service packages	Drive unit - engine	2403244
				Service packages | Hydraulics	1 pc.	**Replacement interval** 1000 h	SCANIA - TIER 3 - STAGE IIIA; SCANIA - LRC	Service packages	Hydraulic system	2856088

MAINTENANCE PARTS

FILTER SETS										
Series code	Serial code	Series range	Type	Application	Requirement	Motor	Exhaust emission standard	Subassembly	Installation location	Part no.
MCO 90 EVO	K120	1 - 9999		Service packages | Hydraulics	1 pc.	**First service | Replacement interval** 500 h | 2000 h	SCANIA - TIER 3 - STAGE IIIA; SCANIA - LRC	Service packages	Hydraulic system	2855584
	K121	1 - 9999		Service packages | Diesel engine	1 pc.	**First service | Replacement interval** 500 h | 2000 h	SCANIA - STAGE V; SCANIA - TIER 4F - STAGE IV	Service packages	Drive unit - engine	2859178
				Service packages | Diesel engine	1 pc.	**Replacement interval** 500 h	SCANIA - STAGE V; SCANIA - TIER 4F - STAGE IV	Service packages	Drive unit - engine	2859098
				Service packages | Hydraulics	1 pc.	**First service | Replacement interval** 500 h | 2000 h	SCANIA - STAGE V; SCANIA - TIER 4F - STAGE IV	Service packages	Hydraulic system	2855584
				Service packages | Hydraulics	1 pc.	**Replacement interval** 1000 h	SCANIA - STAGE V; SCANIA - TIER 4F - STAGE IV	Service packages	Hydraulic system	2856088
MSS 802 EVO	K082	10 - 82		Service packages | Hydraulics	1 pc.	**First service | Replacement interval** 500 h | 1000 h	DEUTZ - TIER 3 - STAGE IIIA	Service packages	Hydraulic system	2922830

FILTER SETS

Series code	Serial code	Series range	Type	Application	Requirement	Motor	Exhaust emission standard	Subassembly	Installation location	Part no.
MSS 802 EVO	K082	10 - 9999		Service packages | Diesel engine	1 pc.	**First service | Replacement interval** 500 h | 1000 h	DEUTZ - TIER 3 - STAGE IIIA	Service packages	Drive unit - engine	2921354
				Service packages | Diesel engine	1 pc.	**Replacement interval** 500 h	DEUTZ - TIER 3 - STAGE IIIA	Service packages	Drive unit - engine	2921350
		29 - 9999		Service packages | Hydraulics	1 pc.	**First service | Replacement interval** 500 h | 1000 h	JOHN DEERE - STAGE IIIA	Service packages	Hydraulic system	2922830
				Service packages | Diesel engine	1 pc.	**Replacement interval** 500 h	JOHN DEERE - STAGE IIIA	Service packages	Drive unit - engine	3017440
				Service packages | Diesel engine	1 pc.	**First service | Replacement interval** 500 h | 2000 h	JOHN DEERE - STAGE IIIA	Service packages	Drive unit - engine	3017441
		83 - 9999		Service packages | Hydraulics	1 pc.	**First service | Replacement interval** 500 h | 1000 h	DEUTZ - TIER 3 - STAGE IIIA; JOHN DEERE - STAGE IIIA	Service packages	Hydraulic system	WX3357437

MAINTENANCE PARTS

FILTER SETS										
Series code	Serial code	Series range	Type	Application	Requirement	Motor	Exhaust emission standard	Subassembly	Installation location	Part no.
MR 122i PRO	K031	1 - 9999	Motor	Service packages | Diesel engine	1 pc.	**First service | Replacement interval** 500 h | 2000 h	SCANIA - TIER 4F - STAGE IV	Service packages	Drive unit - engine	2382642
				Service packages | Diesel engine	1 pc.	**First service | Replacement interval** 500 h | 2000 h	SCANIA - STAGE V	Service packages	Drive unit - engine	2870408
			Motor	Service packages | Diesel engine	1 pc.	**Replacement interval** 500 h	SCANIA - STAGE V	Service packages	Drive unit - engine	2870407
			Motor	Service packages | Diesel engine	1 pc.	**Replacement interval** 500 h	SCANIA - TIER 4F - STAGE IV	Service packages	Drive unit - engine	2562262
			Hydraulics	Service packages | Hydraulics	1 pc.	**First service | Replacement interval** 500 h | 1000 h	SCANIA - TIER 4F - STAGE IV; SCANIA - STAGE V	Service packages	Hydraulic system	F10615349
MSC 1202 PRO	K129	1 - 9999		Service packages | Diesel engine	1 pc.	**Replacement interval** 500 h	CATERPILLAR - TIER 3 - LRC - 168KW - S/N G9R…	Service packages	Drive unit - engine	2959158

FILTER SETS										
Series code	Serial code	Series range	Type	Applic-ation	Re-quire-ment	Motor	Ex-haust emis-sion stand-ard	Su-basse-mbly	Install-ation loca-tion	Part no.
MSC 1202 PRO	K129	1 - 9999		Service pack-ages | Diesel engine	1 pc.	**Re-place-ment interval** 500 h	CATER-PILLAR - TIER 3 - LRC - 168KW - S/N G9R…	Service pack-ages	Drive unit - engine	2803543
MSC 1203 PRO	K130	1 - 9999		Service pack-ages | Diesel engine	1 pc.	**Re-place-ment interval** 500 h	CATER-PILLAR - TIER 3 - STAGE IIIA - 209KW - FIXED SPEED - S/N G9R…; CATER-PILLAR - TIER 3 - LRC - 168KW - S/N G9R…	Service pack-ages	Drive unit - engine	2803543
				Service pack-ages | Diesel engine	1 pc.	**Re-place-ment interval** 1500 h	CATER-PILLAR - TIER 4F - STAGE V - 168KW - S/N 6J6…	Service pack-ages	Drive unit - engine	3027331
				Service pack-ages | Diesel engine	1 pc.	**Re-place-ment interval** 500 h	CATER-PILLAR - TIER 4F - STAGE V - 168KW - S/N 6J6…	Service pack-ages	Drive unit - engine	WX3014238

MAINTENANCE PARTS

FILTER SETS										
Series code	Serial code	Series range	Type	Applic-ation	Re-quire-ment	Motor	Ex-haust emis-sion stand-ard	Su-basse-mbly	Install-ation loca-tion	Part no.
MSC 1203 PRO	K130	1 - 9999		Service pack-ages | Diesel engine	1 pc.	**Re-place-ment interval** 500 h	CATER-PILLAR - TIER 3 - STAGE IIIA - 209KW - FIXED SPEED - S/N G9R…; CATER-PILLAR - TIER 3 - LRC - 168KW - S/N G9R…	Service pack-ages	Drive unit - engine	2959158
MBT 24	K127	1 - 9999		Service pack-ages | Diesel engine	1 pc.	**Re-place-ment interval** 500 h	ISUZU - TIER 3 - STAGE IIIA	Service pack-ages	Drive unit - engine	2843714
				Service pack-ages | Diesel engine	1 pc.	**Re-place-ment interval** 250 h	DEUTZ - TIER 4F - STAGE V	Service pack-ages	Drive unit - engine	3014325
				Service pack-ages | Diesel engine	1 pc.	**Re-place-ment interval** 500 h	ISUZU - TIER 4F - STAGE IV	Service pack-ages	Drive unit - engine	2896642
MBW 15	K126	1 - 9999		Service pack-ages | Diesel engine	1 pc.	**Re-place-ment interval** 500 h	ISUZU - TIER 3 - STAGE IIIA	Service pack-ages	Drive unit - engine	2843714
				Service pack-ages | Diesel engine	1 pc.	**Re-place-ment interval** 500 h	ISUZU - TIER 4F - STAGE IV	Service pack-ages	Drive unit - engine	2896642

FILTER SETS

Series code	Serial code	Series range	Type	Application	Requirement	Motor	Exhaust emission standard	Subassembly	Installation location	Part no.
MBT 20	K128	1 - 9999		Service packages | Diesel engine	1 pc.	**Replacement interval** 500 h	ISUZU - TIER 4F - STAGE IV	Service packages	Drive unit - engine	2896642
				Service packages | Diesel engine	1 pc.	**Replacement interval** 500 h	ISUZU - TIER 3 - STAGE IIIA	Service packages	Drive unit - engine	2843714
				Service packages | Diesel engine	1 pc.	**Replacement interval** 250 h	DEUTZ - TIER 4F - STAGE V	Service packages	Drive unit - engine	3014325
MR 130 PRO	K125	1 - 9999		Service packages | Diesel engine	1 pc.	**First service | Replacement interval** 500 h | 2000 h	SCANIA - STAGE V	Service packages	Drive unit - engine	2978967
				Service packages | Diesel engine	1 pc.	**Replacement interval** 500 h	SCANIA - STAGE V	Service packages	Drive unit - engine	2978970
				Service packages | Hydraulics	1 pc.	**First service | Replacement interval** 500 h | 1000 h	SCANIA - STAGE V	Service packages	Hydraulic system	3086322
	K124	1 - 9999		Service packages | Diesel engine	1 pc.	**Replacement interval** 500 h	SCANIA - TIER 3 - STAGE IIIA	Service packages	Drive unit - engine	3070791

MAINTENANCE PARTS

FILTER SETS										
Series code	Serial code	Series range	Type	Application	Requirement	Motor	Exhaust emission standard	Subassembly	Installation location	Part no.
MR 130 PRO	K124	1 - 9999		Service packages | Diesel engine	1 pc.	**First service | Replacement interval** 500 h | 2000 h	SCANIA - TIER 3 - STAGE IIIA	Service packages	Drive unit - engine	3070787
				Service packages | Diesel engine	1 pc.	**Replacement interval** 500 h	SCANIA - TIER 3 - STAGE IIIA	Service packages	Drive unit - engine	3071760
				Service packages | Diesel engine	1 pc.	**First service | Replacement interval** 500 h | 2000 h	SCANIA - TIER 3 - STAGE IIIA	Service packages	Drive unit - engine	3071758
				Service packages | Hydraulics	1 pc.	**First service | Replacement interval** 500 h | 1000 h	SCANIA - TIER 3 - STAGE IIIA	Service packages	Hydraulic system	3086322
MBT 20	K131	1 - 9999		Service packages | Diesel engine	1 pc.	**Replacement interval** 250 h	KUBOTA - TIER 3 - STAGE IIIA	Service packages	Drive unit - engine	3119151
				Service packages | Diesel engine	1 pc.	**Replacement interval** 750 h	KUBOTA - TIER 3 - STAGE IIIA	Service packages	Drive unit - engine	3119545
				Service packages | Hydraulics	1 pc.	**First service | Replacement interval** 250 h | 2000 h	KUBOTA - TIER 3 - STAGE IIIA	Service packages	Hydraulic system	3111957

Due to possible technical changes, always refer to the information in the instruction manual.

FILTER SETS

Series code	Serial code	Series range	Type	Application	Requirement	Motor	Exhaust emission standard	Subassembly	Installation location	Part no.
MBT 20	K132	1 - 9999		Service packages | Diesel engine	1 pc.	**Replacement interval** 250 h	JOHN DEERE - STAGE V	Service packages	Drive unit - engine	WX3112789
				Service packages | Diesel engine	1 pc.	**Replacement interval** 1250 h	JOHN DEERE - STAGE V	Service packages	Drive unit - engine	3116211
				Service packages | Hydraulics	1 pc.	**First service | Replacement interval** 250 h | 2000 h	JOHN DEERE - STAGE V	Service packages	Hydraulic system	3111957
MBT 24	K133	1 - 9999		Service packages | Diesel engine	1 pc.	**Replacement interval** 250 h	KUBOTA - TIER 3 - STAGE IIIA	Service packages	Drive unit - engine	3119151
				Service packages | Diesel engine	1 pc.	**Replacement interval** 750 h	KUBOTA - TIER 3 - STAGE IIIA	Service packages	Drive unit - engine	3119545
				Service packages | Hydraulics	1 pc.	**First service | Replacement interval** 250 h | 2000 h	KUBOTA - TIER 3 - STAGE IIIA	Service packages	Hydraulic system	3111957
	K134	1 - 9999		Service packages | Diesel engine	1 pc.	**Replacement interval** 250 h	JOHN DEERE - STAGE V	Service packages	Drive unit - engine	WX3112789

MAINTENANCE PARTS

FILTER SETS

Series code	Serial code	Series range	Type	Application	Requirement	Motor	Exhaust emission standard	Subassembly	Installation location	Part no.
MBT 24	K134	1 - 9999		Service packages | Diesel engine	1 pc.	**Replacement interval** 1250 h	JOHN DEERE - STAGE V	Service packages	Drive unit - engine	3116211
				Service packages | Hydraulics	1 pc.	**First service | Replacement interval** 250 h | 2000 h	JOHN DEERE - STAGE V	Service packages	Hydraulic system	3111957
MS 15 Z	K047	200 - 9999	Motor	Service packages | Diesel engine	1 pc.	**Replacement interval** 250 h	CATERPILLAR - TIER 3 - LRC - 95KW - S/N W23...; CATERPILLAR - TIER 3 - STAGE IIIA - 98KW - FIXED SPEED - S/N W23...	Service packages	Drive unit - engine	2586324
			Motor	Service packages | Diesel engine	1 pc.	**Replacement interval** 250 h	CATERPILLAR - TIER 4I - STAGE IIIB - 95KW - S/N 448…; CATERPILLAR - TIER 4F - STAGE IV - 95KW - S/N JKT…	Service packages	Drive unit - engine	2512756

FILTER SETS

Series code	Serial code	Series range	Type	Application	Requirement	Motor	Exhaust emission standard	Subassembly	Installation location	Part no.
MS 15 Z	K047	200 - 9999	Motor	Service packages | Diesel engine	1 pc.	**Replacement interval** 1500 h	CATERPILLAR - TIER 4I - STAGE IIIB - 95KW - S/N 448…	Service packages	Drive unit - engine	2579332
			Motor	Service packages | Diesel engine	1 pc.	**Replacement interval** 1500 h	CATERPILLAR - TIER 4F - STAGE IV - 95KW - S/N JKT…	Service packages	Drive unit - engine	2579518
		1 - 9999	Motor	Service packages | Diesel engine	1 pc.	**Replacement interval** 250 h	CATERPILLAR - TIER 3 - LRC - 75 KW - S/N 446...	Service packages	Drive unit - engine	2304910
		200 - 9999		Service packages | Diesel engine	1 pc.	**Replacement interval** 1500 h	CATERPILLAR - STAGE V - 102KW - S/N 4J4…	Service packages	Drive unit - engine	3074673
			Motor	Service packages | Diesel engine	1 pc.	**Replacement interval** 250 h	CATERPILLAR - TIER 2 - STAGE II - S/N 334...	Service packages	Drive unit - engine	2226635
			Motor	Service packages | Diesel engine	1 pc.	**Replacement interval** 250 h	CATERPILLAR - TIER 3 - LRC - 95KW - S/N 444...	Service packages	Drive unit - engine	2226637

MAINTENANCE PARTS

FILTER SETS

Series code	Serial code	Series range	Type	Application	Requirement	Motor	Exhaust emission standard	Subassembly	Installation location	Part no.
MS 15 Z	K047	200 - 9999		Service packages | Diesel engine	1 pc.	**Replacement interval** 250 h	CATERPILLAR - STAGE V - 102KW - S/N 4J4…	Service packages	Drive unit - engine	3067080
MSS 802 EVO	K102	10 - 54	Motor	Service packages | Diesel engine	1 pc.	**First service | Replacement interval** 500 h | 1000 h	DEUTZ - STAGE V	Service packages	Drive unit - engine	2660526
			Motor	Service packages | Diesel engine	1 pc.	**Replacement interval** 500 h	DEUTZ - STAGE V	Service packages	Drive unit - engine	2660523
		10 - 9999		Service packages | Hydraulics	1 pc.	**First service | Replacement interval** 500 h | 1000 h	DEUTZ - STAGE V	Service packages	Hydraulic system	2922830
		19 - 9999		Service packages | Hydraulics	1 pc.	**First service | Replacement interval** 500 h | 1000 h	JOHN DEERE - STAGE V	Service packages	Hydraulic system	2922830
				Service packages | Diesel engine	1 pc.	**Replacement interval** 500 h	JOHN DEERE - STAGE V	Service packages	Drive unit - engine	3017435
				Service packages | Diesel engine	1 pc.	**Replacement interval** 1500 h	JOHN DEERE - STAGE V	Service packages	Drive unit - engine	3017436

Due to possible technical changes, always refer to the information in the instruction manual.

FILTER SETS

Series code	Serial code	Series range	Type	Application	Requirement	Motor	Exhaust emission standard	Subassembly	Installation location	Part no.
MSS 802 EVO	K102	19 - 9999		Service packages | Diesel engine	1 pc.	**Replacement interval** 3000 h	JOHN DEERE - STAGE V	Service packages	Drive unit - engine	3017439
				Service packages | Hydraulics	1 pc.	**First service | Replacement interval** 500 h | 1000 h	DEUTZ - STAGE V; JOHN DEERE - STAGE V	Service packages	Hydraulic system	WX3357437
MC 110 EVO	K117	1 - 9999		Service packages | Diesel engine	1 pc.	**First service | Replacement interval** 500 h | 2000 h	SCANIA - STAGE V; SCANIA - TIER 4F - STAGE IV	Service packages	Drive unit - engine	2859178
				Service packages | Diesel engine	1 pc.	**Replacement interval** 500 h	SCANIA - STAGE V; SCANIA - TIER 4F - STAGE IV	Service packages	Drive unit - engine	2859098
				Service packages | Hydraulics	1 pc.	**First service | Replacement interval** 500 h | 2000 h	SCANIA - STAGE V; SCANIA - TIER 4F - STAGE IV	Service packages	Hydraulic system	3080309
				Service packages | Hydraulics	1 pc.	**Replacement interval** 1000 h	SCANIA - STAGE V; SCANIA - TIER 4F - STAGE IV	Service packages	Hydraulic system	3080308

MAINTENANCE PARTS

FILTER SETS

Series code	Serial code	Series range	Type	Application	Requirement	Motor	Exhaust emission standard	Subassembly	Installation location	Part no.
MR 100 NEO	K136	1 - 120		Service packages | Diesel engine	1 pc.	**Replacement interval** 500 h	JOHN DEERE - STAGE V/IV	Service packages	Drive unit - engine	3127995
				Service packages | Diesel engine	1 pc.	**Replacement interval** 3000 h	JOHN DEERE - STAGE V/IV	Service packages	Drive unit - engine	3129963
				Service packages | Hydraulics	1 pc.	**First service | Replacement interval** 500 h | 2000 h	JOHN DEERE - STAGE V/IV	Service packages	Hydraulic system	WX3195748
				Service packages | Hydraulics	1 pc.	**Replacement interval** 1000 h	JOHN DEERE - STAGE V/IV	Service packages	Hydraulic system	WX3195749
		121 - 9999		Service packages | Diesel engine	1 pc.	**Replacement interval** 500 h	JOHN DEERE - STAGE V/IV	Service packages	Drive unit - engine	3127995
				Service packages | Diesel engine	1 pc.	**Replacement interval** 3000 h	JOHN DEERE - STAGE V/IV	Service packages	Drive unit - engine	3129963
				Service packages | Hydraulics	1 pc.	**First service | Replacement interval** 500 h | 2000 h	JOHN DEERE - STAGE V/IV	Service packages	Hydraulic system	WX3302870

FILTER SETS

Series code	Serial code	Series range	Type	Application	Requirement	Motor	Exhaust emission standard	Subassembly	Installation location	Part no.
MR 100 NEO	K136	121 - 9999		Service packages | Hydraulics	1 pc.	**Replacement interval** 1000 h	JOHN DEERE - STAGE V/IV	Service packages	Hydraulic system	WX3195749
MR 100 NEOe	K138	1 - 19		Service packages | Diesel engine	1 pc.	**Replacement interval** 3000 h	JOHN DEERE - STAGE V/IV	Service packages	Drive unit - engine	3129963
				Service packages | Diesel engine	1 pc.	**Replacement interval** 500 h	JOHN DEERE - STAGE V/IV	Service packages	Drive unit - engine	3127995
				Service packages | Hydraulics	1 pc.	**First service | Replacement interval** 500 h | 2000 h	JOHN DEERE - STAGE V/IV	Service packages	Hydraulic system	WX3195748
				Service packages | Hydraulics	1 pc.	**Replacement interval** 1000 h	JOHN DEERE - STAGE V/IV	Service packages	Hydraulic system	WX3195749
		20 - 9999		Service packages | Diesel engine	1 pc.	**Replacement interval** 3000 h	JOHN DEERE - STAGE V/IV	Service packages	Drive unit - engine	3129963
				Service packages | Diesel engine	1 pc.	**Replacement interval** 500 h	JOHN DEERE - STAGE V/IV	Service packages	Drive unit - engine	3127995

MAINTENANCE PARTS

FILTER SETS

Series code	Serial code	Series range	Type	Application	Requirement	Motor	Exhaust emission standard	Subassembly	Installation location	Part no.
MR 100 NEOe	K138	20 - 9999		Service packages | Hydraulics	1 pc.	**First service | Replacement interval** 500 h | 2000 h	JOHN DEERE - STAGE V/IV	Service packages	Hydraulic system	WX3302870
				Service packages | Hydraulics	1 pc.	**Replacement interval** 1000 h	JOHN DEERE - STAGE V/IV	Service packages	Hydraulic system	WX3195749
MR 100 NEO	K135	1 - 9999		Service packages | Diesel engine	1 pc.	**Replacement interval** 3000 h	JOHN DEERE - STAGE IIIA	Service packages	Drive unit - engine	WX3298786
				Service packages | Diesel engine	1 pc.	**Replacement interval** 500 h	JOHN DEERE - STAGE IIIA	Service packages	Drive unit - engine	3127995
				Service packages | Hydraulics	1 pc.	**First service | Replacement interval** 500 h | 2000 h	JOHN DEERE - STAGE IIIA	Service packages	Hydraulic system	WX3302870
				Service packages | Hydraulics	1 pc.	**Replacement interval** 1000 h	JOHN DEERE - STAGE IIIA	Service packages	Hydraulic system	WX3195749
MSS 502 EVO	K142	1 - 9999		Service packages | Diesel engine	1 pc.	**Replacement interval** 500 h	JOHN DEERE - STAGE IIIA	Service packages	Drive unit - engine	3017440

FILTER SETS

Series code	Serial code	Series range	Type	Application	Requirement	Motor	Exhaust emission standard	Subassembly	Installation location	Part no.
MSS 502 EVO	K142	1 - 9999		Service packages | Diesel engine	1 pc.	**First service | Replacement interval** 500 h | 2000 h	JOHN DEERE - STAGE IIIA	Service packages	Drive unit - engine	3017441
				Service packages | Hydraulics	1 pc.	**First service | Replacement interval** 500 h | 1000 h	JOHN DEERE - STAGE IIIA	Service packages	Hydraulic system	WX3187679
	K143	1 - 9999		Service packages | Diesel engine	1 pc.	**Replacement interval** 500 h	JOHN DEERE - STAGE V	Service packages	Drive unit - engine	3017435
				Service packages | Diesel engine	1 pc.	**Replacement interval** 1500 h	JOHN DEERE - STAGE V	Service packages	Drive unit - engine	3017436
				Service packages | Diesel engine	1 pc.	**Replacement interval** 3000 h	JOHN DEERE - STAGE V	Service packages	Drive unit - engine	3017439
				Service packages | Hydraulics	1 pc.	**First service | Replacement interval** 500 h | 1000 h	JOHN DEERE - STAGE V	Service packages	Hydraulic system	WX3187679
MSS 1102 PRO	K144	1 - 9999		Service packages | Diesel engine	1 pc.	**Replacement interval** 500 h	JOHN DEERE - STAGE IIIA	Service packages	Drive unit - engine	WX3307801

MAINTENANCE PARTS

FILTER SETS										
Series code	Serial code	Series range	Type	Application	Requirement	Motor	Exhaust emission standard	Subassembly	Installation location	Part no.
MSS 1102 PRO	K144	1 - 9999		Service packages | Diesel engine	1 pc.	**Replacement interval** 3000 h	JOHN DEERE - STAGE IIIA	Service packages	Drive unit - engine	WX3307806
				Service packages | Diesel engine	1 pc.	**Replacement interval** 1500 h	JOHN DEERE - STAGE IIIA	Service packages	Drive unit - engine	WX3307805
				Service packages | Hydraulics	1 pc.	**Replacement interval** 1000 h	JOHN DEERE - STAGE IIIA	Service packages	Hydraulic system	WX3187679
	K145	1 - 9999		Service packages | Diesel engine	1 pc.	**Replacement interval** 1500 h	JOHN DEERE - STAGE V	Service packages	Drive unit - engine	WX3262149
				Service packages | Diesel engine	1 pc.	**Replacement interval** 500 h	JOHN DEERE - STAGE V	Service packages	Drive unit - engine	WX3262147
				Service packages | Diesel engine	1 pc.	**Replacement interval** 3000 h	JOHN DEERE - STAGE V	Service packages	Drive unit - engine	WX3262150
				Service packages | Hydraulics	1 pc.	**Replacement interval** 1000 h	JOHN DEERE - STAGE V	Service packages	Hydraulic system	WX3187679
MSC 702 EVO	K148	1 - 9999		Service packages | Diesel engine	1 pc.	**Replacement interval** 500 h	JOHN DEERE - STAGE IIIA	Service packages	Drive unit - engine	3017440

FILTER SETS

Series code	Serial code	Series range	Type	Application	Requirement	Motor	Exhaust emission standard	Subassembly	Installation location	Part no.
MSC 702 EVO	K148	1 - 9999		Service packages | Diesel engine	1 pc.	**First service | Replacement interval** 500 h | 2000 h	JOHN DEERE - STAGE IIIA	Service packages	Drive unit - engine	3017441
			Hydraulics	Service packages | Hydraulics	1 pc.	**First service | Replacement interval** 500 h | 1000 h	JOHN DEERE - STAGE IIIA	Service packages	Hydraulic system	2594581
	K149	1 - 9999		Service packages | Diesel engine	1 pc.	**Replacement interval** 500 h	JOHN DEERE - STAGE V	Service packages	Drive unit - engine	3017435
				Service packages | Diesel engine	1 pc.	**Replacement interval** 3000 h	JOHN DEERE - STAGE V	Service packages	Drive unit - engine	3017439
				Service packages | Diesel engine	1 pc.	**Replacement interval** 1500 h	JOHN DEERE - STAGE V	Service packages	Drive unit - engine	3017436
			Hydraulics	Service packages | Hydraulics	1 pc.	**First service | Replacement interval** 500 h | 1000 h	JOHN DEERE - STAGE V	Service packages	Hydraulic system	2594581
MSC 703 EVO	K150	1 - 9999		Service packages | Diesel engine	1 pc.	**Replacement interval** 500 h	JOHN DEERE - STAGE IIIA	Service packages	Drive unit - engine	3017440

MAINTENANCE PARTS

FILTER SETS										
Series code	Serial code	Series range	Type	Application	Requirement	Motor	Exhaust emission standard	Subassembly	Installation location	Part no.
MSC 703 EVO	K150	1 - 9999		Service packages | Diesel engine	1 pc.	**First service | Replacement interval** 500 h | 2000 h	JOHN DEERE - STAGE IIIA	Service packages	Drive unit - engine	3017441
			Hydraulics	Service packages | Hydraulics	1 pc.	**First service | Replacement interval** 500 h | 1000 h	JOHN DEERE - STAGE IIIA	Service packages	Hydraulic system	2594581
	K151	1 - 9999		Service packages | Diesel engine	1 pc.	**Replacement interval** 500 h	JOHN DEERE - STAGE V	Service packages	Drive unit - engine	3017435
				Service packages | Diesel engine	1 pc.	**Replacement interval** 3000 h	JOHN DEERE - STAGE V	Service packages	Drive unit - engine	3017439
				Service packages | Diesel engine	1 pc.	**Replacement interval** 1500 h	JOHN DEERE - STAGE V	Service packages	Drive unit - engine	3017436
			Hydraulics	Service packages | Hydraulics	1 pc.	**First service | Replacement interval** 500 h | 1000 h	JOHN DEERE - STAGE V	Service packages	Hydraulic system	2594581
MSC 952 EVO	K152	1 - 9999		Service packages | Diesel engine	1 pc.	**Replacement interval** 500 h	JOHN DEERE - STAGE IIIA	Service packages	Drive unit - engine	3017440

FILTER SETS

Series code	Serial code	Series range	Type	Application	Requirement	Motor	Exhaust emission standard	Subassembly	Installation location	Part no.
MSC 952 EVO	K152	1 - 9999		Service packages | Diesel engine	1 pc.	**First service | Replacement interval** 500 h | 2000 h	JOHN DEERE - STAGE IIIA	Service packages	Drive unit - engine	3017441
			Hydraulics	Service packages | Hydraulics	1 pc.	**First service | Replacement interval** 500 h | 1000 h	JOHN DEERE - STAGE IIIA	Service packages	Hydraulic system	2594581
	K153	1 - 9999		Service packages | Diesel engine	1 pc.	**Replacement interval** 500 h	JOHN DEERE - STAGE V	Service packages	Drive unit - engine	3017435
				Service packages | Diesel engine	1 pc.	**Replacement interval** 3000 h	JOHN DEERE - STAGE V	Service packages	Drive unit - engine	3017439
				Service packages | Diesel engine	1 pc.	**Replacement interval** 1500 h	JOHN DEERE - STAGE V	Service packages	Drive unit - engine	3017436
			Hydraulics	Service packages | Hydraulics	1 pc.	**First service | Replacement interval** 500 h | 1000 h	JOHN DEERE - STAGE V	Service packages	Hydraulic system	2594581
MSC 953 EVO	K154	1 - 9999		Service packages | Diesel engine	1 pc.	**Replacement interval** 500 h	JOHN DEERE - STAGE IIIA	Service packages	Drive unit - engine	3017440

MAINTENANCE PARTS

FILTER SETS										
Series code	Serial code	Series range	Type	Application	Requirement	Motor	Exhaust emission standard	Subassembly	Installation location	Part no.
MSC 953 EVO	K154	1 - 9999		Service packages | Diesel engine	1 pc.	**First service | Replacement interval** 500 h | 2000 h	JOHN DEERE - STAGE IIIA	Service packages	Drive unit - engine	3017441
			Hydraulics	Service packages | Hydraulics	1 pc.	**First service | Replacement interval** 500 h | 1000 h	JOHN DEERE - STAGE IIIA	Service packages	Hydraulic system	2594581
	K155	1 - 9999		Service packages | Diesel engine	1 pc.	**Replacement interval** 500 h	JOHN DEERE - STAGE V	Service packages	Drive unit - engine	3017435
				Service packages | Diesel engine	1 pc.	**Replacement interval** 3000 h	JOHN DEERE - STAGE V	Service packages	Drive unit - engine	3017439
				Service packages | Diesel engine	1 pc.	**Replacement interval** 1500 h	JOHN DEERE - STAGE V	Service packages	Drive unit - engine	3017436
			Hydraulics	Service packages | Hydraulics	1 pc.	**First service | Replacement interval** 500 h | 1000 h	JOHN DEERE - STAGE V	Service packages	Hydraulic system	2594581

LUBRICANTS

Filling or lubricating your machine with a lubricant which is specifically matched to your application is critical for the service life of the operational parts in combustion engines, hydraulic components, gear units and bearings.

WIRTGEN GROUP lubricants meet these requirements perfectly and are optimised for your WIRTGEN GROUP machine.

The best choice for ensuring the effectiveness of your machine and reducing maintenance costs long-term!

> Read more online for WIRTGEN

> Read more online for VÖGELE

> Read more online for HAMM

> Read more online for KLEEMANN

GEAR OILS			
Part	Properties	Container	Part no.
Gear oil 85W-90	Mineral oil-based axle gear oil for WIRTGEN drive systems. Do not use for WIRTGEN milling drum gearboxes (except 2500 SM, 4200 SM), HAMM vibratory bearings and drum drives or VÖGELE pump splitter gearboxes and drive systems.	5 l	2065030
		20 l	2065031
		208 l	2065032
High-performance gear oil PGLP 150	Exclusive fully synthetic gear oil tailored to high-performance use in WIRTGEN milling drum gearboxes. The high wettability of the lubricant ensures that the oil adheres well to gears and thus offers excellent wear protection. Do not use for HAMM vibratory bearings and drum drives.	5 l	2173019
		20 l	199752
		208 l	2120829
High-performance gear oil PGLP 220	Exclusive fully synthetic gear oil designed for high-performance use in WIRTGEN milling drum gearboxes as well as KLEEMANN conveyor and bevel gearboxes. The high wettability of the lubricant ensures that the oil adheres well to gears and thus offers excellent wear protection. Do not use for HAMM vibratory bearings and drum drives.	5 l	2170074
		20 l	2065033
		208 l	2065034
High-performance gear oil PGLP 460	Exclusive fully synthetic gear oil tailored to high-performance use in WIRTGEN hot recyclers and in S-Pack binding agent metering units. The high wettability of the lubricant ensures that the oil adheres well to gears and thus offers excellent wear protection. Do not use for HAMM vibratory bearings and drum drives.	5 l	2461524
		20 l	2120830
Multi gear oil VG 150	Mineral oil-based industrial gear oil for KLEEMANN cone crushers. The EP (extreme pressure) additives provide exceptional wear protection. Recommended for use in KLEEMANN MCO 9 EVO and MCO 11 PRO cone crushers.	20 l	2483280
		208 l	2483281

Due to possible technical changes, always refer to the information in the instruction manual.

Original KLEEMANN

MAINTENANCE PARTS

GEAR OILS

Part	Properties	Container	Part no.
Special gear oil	Special fully synthetic multigrade gear oil for VÖGELE pump splitter gearboxes and drive systems, HAMM vibratory bearings as well as KLEEMANN travel drives. It has excellent cold-start behaviour and offers exceptional wear protection (for example in bearings, gear wheels) and is therefore particularly suitable for demanding applications.	5 l	1238051
		20 l	2065037
		208 l	2065038
Special gear oil for roller drum drives	Special fully synthetic multigrade gear oil for HAMM roller drum drives. It has excellent cold-start behaviour and offers exceptional wear protection (for example in bearings, gear wheels) and is therefore particularly suitable for demanding applications.	5 l	2571293
		20 l	2571294
		208 l	2571300

HYDRAULIC OILS

Part	Properties	Container	Part no.
Clutch fuid HLP 32	Hydraulic oil for use in KLEEMANN clutches Suitable for low temperatures (subpolar zone).	5 l	2268030
		20 l	2268032
Hydraulic Oil HVLP 46	Multigrade hydraulic oil Suitable for moderate temperatures.	20 l	2065028
		208 l	2065029
		1000 l IBC	2118571
Hydraulic oil HVLP 68	Multigrade hydraulic oil suitable for high temperatures (subtropics, tropics).	20 l	2118574
		208 l	2570591

COOLANTS

Part	Properties	Container	Part no.
Antifreezing Compound WG30	Coolants for protection against corrosion, overheating and frost (not suitable for use in 09WR (WR 200i) or KLEEMANN machines).	5 l	2173022
		20 l	2173023
		208 l	2173024
Antifreezing Compound WG48	Coolant for KLEEMANN machines to protect against corrosion, overheating and frost.	20 l	2535933
WG40 Anti-Freeze (pink)	Coolants to protect against corrosion, overheating and frost for Mercedes Benz diesel engines installed in 09WR (WR 200i).	20 l	2555507

Due to possible technical changes, always refer to the information in the instruction manual.

ENGINE OILS

Part	Properties	Container	Part no.
Engine oil low SAPS 10W-30	Semi-synthetic 'Low SAPS' engine oil (low sulphated ash, sulphur and phosphorus content) with Fuel Economy technology. Its low sulphated ash content ensures that burnt oil components do not prematurely clog the exhaust aftertreatment system's particulate filters (DPF).	5 l	2210320
		20 l	2210322
		208 l	2210323
		1000 l IBC	2118570
Engine oil low SAPS 10W-40	Synthetic low-viscosity engine oil with a comprehensive performance spectrum Fuel savings of up to 1% compared to a 15W-40 are possible. For use in markets in which low-sulphur fuel is used (e.g. Europe). Suitable for engines with exhaust gas aftertreatment (EU Stage 3b/ US EPA Tier 4i exhaust emission standard and above).	5 l	2346869
		20 l	2346870
		208 l	2346871
Engine oil low SAPS 15W-40	Mineral oil-based engine oil with higher quality base oil Meets the viscosity requirements of all WIRTGEN GROUP machines with Cummins engines. For use in markets in which low-sulphur fuel is used (e.g. Europe). Suitable for engines with exhaust gas aftertreatment (EU Stage 3b/ US EPA Tier 4i exhaust emission standard and above).	5 l	2573349
		20 l	2573350
		208 l	2573351
		1000 l IBC	2637453
Engine oil 10W-40	Synthetic low-viscosity engine oil for the longest oil change intervals For use in markets in which fuel with a higher sulphur content is used (e.g. India, China, Africa, South America). Suitable for engines without exhaust aftertreatment (up to and including EU Stage 3a/US EPA Tier 3 exhaust emission standards).	5 l	2112355
		20 l	2112354
		208 l	2219171
		1000 l IBC	2118569
Engine oil 15W-40	Mineral oil-based multigrade engine oil For use in markets where fuel with a higher sulphur content is used (for example India, China, Africa, South America). Suitable for engines without exhaust aftertreatment (up to and including EU Stage 3a/US EPA Tier 3 exhaust emission standards).	5 l	2065020
		20 l	2065025
		208 l	2065026
		1000 l IBC	2118572

GREASE

Part	Properties	Container	Part no.
Drive bearing grease	Special high-performance grease for use in HAMM bearings. Extremely pressure- and water-resistant.	1 kg	1227114

Due to possible technical changes, always refer to the information in the instruction manual.

Original KLEEMANN

MAINTENANCE PARTS

GREASE			
Part	Properties	Container	Part no.
Drum bearing grease	Exclusive grease for the lubrication of HAMM drum bearings. Extremely temperature- and pressure-resistant.	1 kg	1205757
Friction and roller bearing grease	High-performance polyurea grease with extreme pressure resistance and excellent wear protection. For the lubrication of VÖGELE roller bearings and sliding bearings that are subject to high thermal loads as well as BENNINGHOVEN applications. Wide operating temperature range from -25 °C to +180 °C (multigrade grease).	18 kg	2027868
		400 g	WX3178176
High-performance grease	Mineral oil-based lithium complex grease with excellent wear protection. For use on couplings and WIRTGEN remixers, for example. Wide operating temperature range from -20 °C to +150 °C (multigrade grease).	400 g	47259
KLEEMANN high-performance grease	Grease for KLEEMANN screen bearings.	380 g	M10021195
Multipurpose Moly grease	Mineral oil-based grease for lubricating high-load or shock-loaded bearings in damp, unfavourable conditions. Suitable for lubrication points with mixed friction, rough surfaces and as assembly grease (for example joint pins, wheel bearings). Not suitable for ball bearings and polished surfaces. Operating temperature from -25 °C to +120 °C.	18 kg	WX3327565
		180 kg	WX3327566
		400 g	2065035
Cone Moly grease	High viscosity lithium complex grease for lubricating KLEEMANN cone crushers. Molybdenum disulphide (MoS2) grease. For heavy-duty, slow-turning bearings and bolts. Not suitable for ball bearings and polished surfaces. Operating temperature from -20 °C to +150 °C.	18 kg	2368338
		400 g	2342967

OTHER LUBRICANTS			
Part	Properties	Container	Part no.
AdBlue®/DEF	32.5% high-purity urea solution according to DIN 70070 / ISO 22241. AdBlue® is a registered trademark of the Association of the Automotive Industry (Verband der Automobilindustrie e. V.; VDA)	10 l	2434706
		210 l	2090870
		1000 l	2447156
Asphalt anti-stick	The perfect solution for pneumatic tyre and combination rollers from HAMM – prevents bitumen sticking to the rubber tyres. The emulsion is based on a non-toxic solution and is therefore quickly biodegradable.	5 l	2559307
		20 l	2559309
Silicone transformer liquid	DOW transformer oil can be used for the magnetic separator on KLEEMANN machines.	20 l	2346389

Due to possible technical changes, always refer to the information in the instruction manual.

BIOLOGICAL HYDRAULIC OIL			
Part	Properties	Container	Part no.
Bio Hydraulic Oil HVLP 46	Biodegradable multigrade hydraulic oil Suitable for moderate temperatures.	20 l	2118575
		208 l	2270558

Original KLEEMANN

EMERGENCY KITS

Small faults in the electrical system such as blown fuses, failed relays, damaged contacts or switches can interrupt construction site operations for long periods of time. KLEEMANN emergency kits for machine operators, which consist of items specially selected for the respective machine type, can be used to rectify any malfunctions quickly and cost-effectively.

> Read more online

EMERGENCY KITS

KLEEMANN emergency kits for machine operators, which consist of items specially selected for the respective machine type, can be used to rectify any malfunctions quickly and cost-effectively.

EMERGENCY KITS				
Series code	Serial code	Series range	Version	Part no.
MC 100 EVO	K002, K011	1 - 9999	Worldwide	2328285
MC 110 R EVO	K005	1 - 9999	Worldwide	2328285
MC 110 Ri EVO	K014	1 - 9999	Worldwide	2328285
MC 110 Z EVO	K006	1 - 9999	Worldwide	2328285

EMERGENCY KITS				
Series code	Serial code	Series range	Version	Part no.
MC 110 Zi EVO	K015	1 - 9999	Worldwide	2328285
MC 120 PRO	K034	1 - 9999	EU	2540693
	K035	1 - 9999	US	2568649
			EU	2540693
MCO 9 EVO	K072	1 - 9999	Worldwide	2392714
MCO 9i EVO	K073	1 - 9999	Worldwide	2392714
MCO 9S EVO	K074	1 - 9999	Worldwide	2392714
MCO 9Si EVO	K075	1 - 9999	Worldwide	2392714
MCO 110 PRO	K110	1 - 9999	EU	2540693
	K111	1 - 9999	US	2568649
			EU	2540693
MR 110 EVO	K018	1 - 9999	Worldwide	2385137
		137 - 9999	Worldwide	2591720
	K019	1 - 34	Worldwide	2385137
		35 - 35	Worldwide	2591720
		36 - 36	Worldwide	2385137
		37 - 9999	Worldwide	2591720
MR 130 EVO	K077	1 - 192	Worldwide	2385137
		193 - 9999	Worldwide	2591720
	K078	1 - 29	Worldwide	2385137
		30 - 30	Worldwide	2591720
		31 - 32	Worldwide	2385137
		33 - 9999	Worldwide	2591720
MSC 702 EVO	K083	1 - 9999	Worldwide	2503425
MSC 702i EVO	K103	1 - 9999	Worldwide	2503425
MSC 703 EVO	K084	1 - 9999	Worldwide	2503425

Original KLEEMANN

EMERGENCY KITS

EMERGENCY KITS				
Series code	Serial code	Series range	Version	Part no.
MSC 703i EVO	K104	1 - 9999	Worldwide	2503425
MSC 952 EVO	K085	1 - 9999	Worldwide	2503425
MSC 952i EVO	K105	1 - 9999	Worldwide	2503425
MSC 953 EVO	K086	1 - 9999	Worldwide	2503425
MSC 953i EVO	K106	1 - 9999	Worldwide	2503425
MR 130 PRO	K125, K124	1 - 9999	Worldwide	3078533
MBT 20	K131, K132	1 - 9999	Worldwide	WX3191797
MBT 24	K133, K134	1 - 9999	Worldwide	WX3191797
MR 100 NEOe	K138, K137	1 - 9999	Worldwide	WX3198542
MSS 1102 PRO	K144	1 - 9999	Worldwide	2503425
MSC 702 EVO	K148, K149	1 - 9999	Worldwide	2503425
MSC 703 EVO	K150, K151	1 - 9999	Worldwide	2503425
MSC 952 EVO	K152, K153	1 - 9999	Worldwide	2503425
MSC 953 EVO	K154, K155	1 - 9999	Worldwide	2503425

DIGITAL SOLUTIONS AND OPERATING

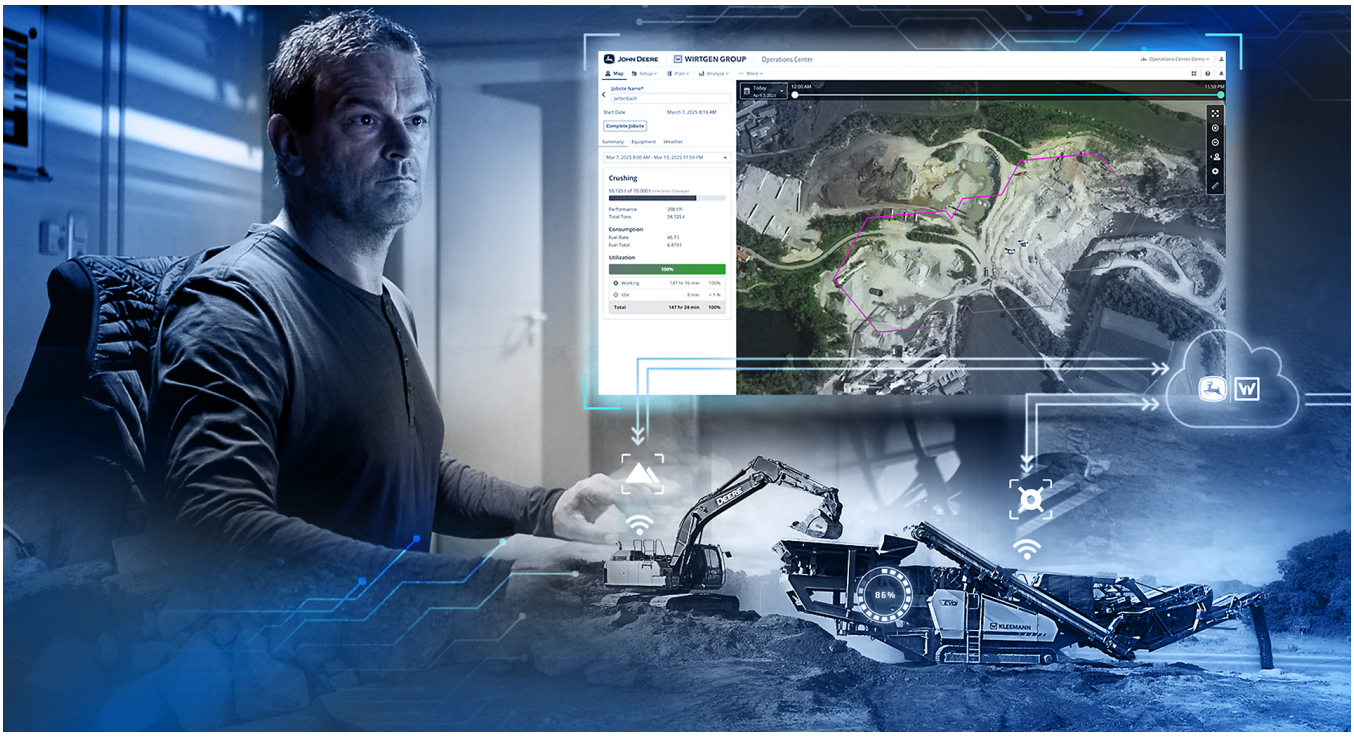

The digital solutions from KLEEMANN enable optimal exploitation of the potentials of every machine: Whether SPECTIVE CONNECT for mobile display of machine and process data, the radio remote control for convenient operations from a distance, the belt conveyor scales for precise registration of performance or the telematics unit for real-time monitoring in the John Deere Operations Center™ – each solution contributes to making processes more efficient, more transparent and user-friendlier.

> Read more online

SPECTIVE CONNECT

SPECTIVE CONNECT is the logical extension of SPECTIVE that replicates the user interface on the crusher in the cabin of the excavator or wheel loader and thus brings it directly to the operator. Apart from relevant data such as engine speed, consumption values, productivity and fill levels, it also displays error messages and live camera views.

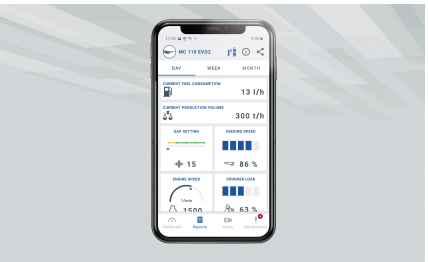

SPECTIVE CONNECT						
Series code	Serial code	Version	Package	Package content	Retrofitting	Part no.
MC 120 PRO	K034, K035	EU	Standard	SPECTIVE CONNECT	Retrofitting possible in the field	3084487
		North America	Standard	SPECTIVE CONNECT	Retrofitting possible in the field	3084490
MCO 110 PRO	K110, K111	EU	Standard	SPECTIVE CONNECT	Retrofitting possible in the field	3093136
		North America	Standard	SPECTIVE CONNECT	Retrofitting possible in the field	3093096

DIGITAL SOLUTIONS AND OPERATING

SPECTIVE CONNECT						
Series code	Serial code	Version	Package	Package content	Retrofitting	Part no.
MR 110 EVO	K018, K019	North America	Standard	SPECTIVE CONNECT	Retrofitting possible in the field	3042142
		EU	Standard	SPECTIVE CONNECT	Retrofitting possible in the field	3042137
MR 130 EVO	K077	EU	Standard	SPECTIVE CONNECT	Retrofitting possible in the field	3043113
		North America	Standard	SPECTIVE CONNECT	Retrofitting possible in the field	3043130
	K078	North America	Standard	SPECTIVE CONNECT	Retrofitting possible in the field	3043130
		EU	Standard	SPECTIVE CONNECT	Retrofitting possible in the field	3043113
MC 110 EVO	K116	North America	Standard	SPECTIVE CONNECT	Retrofitting possible in the field	2922178
		EU	Standard	SPECTIVE CONNECT	Retrofitting possible in the field	2922177
MCO 90 EVO	K120	EU	Standard	SPECTIVE CONNECT	Retrofitting possible in the field	2922177
	K121	EU	Standard	SPECTIVE CONNECT	Retrofitting possible in the field	2922177
		North America	Standard	SPECTIVE CONNECT	Retrofitting possible in the field	2922178
MR 130 PRO	K125	EU	Standard	SPECTIVE CONNECT	Retrofitting possible in the field	WX3052614
		North America	Standard	SPECTIVE CONNECT	Retrofitting possible in the field	WX3052615
	K124	North America	Standard	SPECTIVE CONNECT	Retrofitting possible in the field	WX3052615
		EU	Standard	SPECTIVE CONNECT	Retrofitting possible in the field	WX3052614
MC 110 EVO	K117	North America	Standard	SPECTIVE CONNECT	Retrofitting possible in the field	2922178
		EU	Standard	SPECTIVE CONNECT	Retrofitting possible in the field	2922177

FULL CONTROL

SPECTIVE CONNECT and the small radio remote control are the ideal operating team. This combination enables you to increase your efficiency and safety during the crushing process. All relevant data are visible on the smartphone at a glance, including assistance for reporting. Convenient control of all relevant functions from the driver's cab in automatic mode.

FULL CONTROL							
Series code	Serial code	Part	Version	Package	Package content	Retrofitting	Part no.
MCO 90 EVO	K120	SPECTIVE CONNECT Full Control	EU	Full Control	SPECTIVE CONNECT; SPECTIVE radio remote control, small	Retrofitting possible in the field	2982508
	K121	SPECTIVE CONNECT Full Control	North America	Full Control	SPECTIVE CONNECT; SPECTIVE radio remote control, small	Retrofitting possible in the field	2982510
			EU	Full Control	SPECTIVE CONNECT; SPECTIVE radio remote control, small	Retrofitting possible in the field	2982508
MR 130 PRO	K125	SPECTIVE CONNECT Full Control	EU	Full Control	SPECTIVE CONNECT; SPECTIVE radio remote control, small	Retrofitting possible in the field	3052616
	K124	SPECTIVE CONNECT Full Control	North America	Full Control	SPECTIVE CONNECT; SPECTIVE radio remote control, small	Retrofitting possible in the field	WX3052619
			EU	Full Control	SPECTIVE CONNECT; SPECTIVE radio remote control, small	Retrofitting possible in the field	3052616

DIGITAL SOLUTIONS AND OPERATING

PRODUCTIVITY

SPECTIVE CONNECT, the small radio remote control and the belt scale on the crusher discharge conveyor are the best trio for ensuring maximum performance and ensure that operators always have a direct view of the performance data of their plants.

PRODUCTIVITY							
Series code	Serial code	Part	Version	Package	Package content	Retrofitting	Part no.
MC 120 PRO	K034	SPECTIVE CONNECT Productivity	EU	Productivity	SPECTIVE CONNECT; Belt scale, crusher discharge conveyor	Retrofitting possible in the field	3084491
			North America	Productivity	SPECTIVE CONNECT; Belt scale, crusher discharge conveyor	Retrofitting possible in the field	3084492
	K035	SPECTIVE CONNECT Productivity	North America	Productivity	SPECTIVE CONNECT; Belt scale, crusher discharge conveyor	Retrofitting possible in the field	3084492
			EU	Productivity	SPECTIVE CONNECT; Belt scale, crusher discharge conveyor	Retrofitting possible in the field	3084491
MCO 110 PRO	K110	SPECTIVE CONNECT Productivity	North America	Productivity	SPECTIVE CONNECT; Belt scale, crusher discharge conveyor	Retrofitting possible in the field	3093204
			EU	Productivity	SPECTIVE CONNECT; Belt scale, crusher discharge conveyor	Retrofitting possible in the field	3093173

PRODUCTIVITY							
Series code	Serial code	Part	Version	Package	Package content	Retrofitting	Part no.
MCO 110 PRO	K111	SPECTIVE CONNECT Productivity	EU	Productivity	SPECTIVE CONNECT; Belt scale, crusher discharge conveyor	Retrofitting possible in the field	3093173
			North America	Productivity	SPECTIVE CONNECT; Belt scale, crusher discharge conveyor	Retrofitting possible in the field	3093204
MR 110 EVO	K018, K019	SPECTIVE CONNECT Productivity	EU	Productivity	SPECTIVE CONNECT; Belt scale, crusher discharge conveyor	Retrofitting possible in the field	3043124
			North America	Productivity	SPECTIVE CONNECT; Belt scale, crusher discharge conveyor	Retrofitting possible in the field	3043131
MR 130 EVO	K077, K078	SPECTIVE CONNECT Productivity	EU	Productivity	SPECTIVE CONNECT; Belt scale, crusher discharge conveyor	Retrofitting possible in the field	3043125
			North America	Productivity	SPECTIVE CONNECT; Belt scale, crusher discharge conveyor	Retrofitting possible in the field	3043132

DIGITAL SOLUTIONS AND OPERATING

PERFORMANCE

The Productivity Package for the MOBIREX MR 110/130(i) EVO2 comprises SPECTIVE CONNECT and the optional belt scale on the crusher discharge conveyor. With this combination, operators always have a real-time overview of the performance data of their plants and are guaranteed additional transparency.

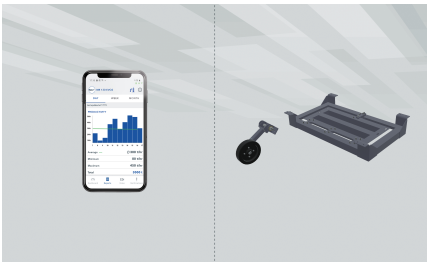

PERFORMANCE

Series code	Serial code	Part	Version	Package	Package content	Retrofitting	Part no.
MCO 90 EVO	K120	SPECTIVE CONNECT Performance	EU	Performance	SPECTIVE CONNECT; SPECTIVE radio remote control, small; Belt scale, crusher discharge conveyor	Retrofitting possible in the field	2982541
	K121	SPECTIVE CONNECT Performance	EU	Performance	SPECTIVE CONNECT; SPECTIVE radio remote control, small; Belt scale, crusher discharge conveyor	Retrofitting possible in the field	2982541
			North America	Performance	SPECTIVE CONNECT; SPECTIVE radio remote control, small; Belt scale, crusher discharge conveyor	Retrofitting possible in the field	2982543
MR 130 PRO	K125	SPECTIVE CONNECT Performance	North America	Performance	SPECTIVE CONNECT; SPECTIVE radio remote control, small; Belt scale, crusher discharge conveyor	Retrofitting possible in the field	WX3052624
			EU	Performance	SPECTIVE CONNECT; SPECTIVE radio remote control, small; Belt scale, crusher discharge conveyor	Retrofitting possible in the field	WX3052621

PERFORMANCE							
Series code	Serial code	Part	Version	Package	Package content	Retrofitting	Part no.
MR 130 PRO	K124	SPECTIVE CONNECT Performance	EU	Performance	SPECTIVE CONNECT; SPECTIVE radio remote control, small; Belt scale, crusher discharge conveyor	Retrofitting possible in the field	WX3052621
			North America	Performance	SPECTIVE CONNECT; SPECTIVE radio remote control, small; Belt scale, crusher discharge conveyor	Retrofitting possible in the field	WX3052624

PRODUCTIVITY VIEW+

The Productivity and Overview Package comprises SPECTIVE CONNECT, the belt scale on the crusher discharge conveyor and the camera system. This guarantees that plant operators have a 'live' overview of the plant and its performance data at their fingertips at all times.

PRODUCTIVITY VIEW+							
Series code	Serial code	Part	Version	Package	Package content	Retrofitting	Part no.
MC 120 PRO	K034, K035	SPECTIVE CONNECT Productivity View+	EU; North America	Productivity View+	SPECTIVE CONNECT; Belt scale, crusher discharge conveyor; Camera system with upgrade to SPECTIVE CONNECT	Retrofitting at subsidiaries	3055812

DIGITAL SOLUTIONS AND OPERATING

PERFORMANCE VIEW+

The Performance and Overview Package comprises SPECTIVE CONNECT, the small radio remote control, the belt scale on the crusher discharge conveyor and the camera system. This combination guarantees that operators have a 'live' overview of the plant and its performance data at their fingertips at all times.

PERFORMANCE VIEW+							
Series code	Serial code	Part	Version	Package	Package content	Retrofitting	Part no.
MC 110 EVO	K116	SPECTIVE CONNECT Performance View+	EU; North America	Performance View+	SPECTIVE CONNECT; SPECTIVE radio remote control, small; Belt scale, crusher discharge conveyor; Camera system with upgrade to SPECTIVE CONNECT	Retrofitting at subsidiaries	3055926
MR 130 PRO	K125, K124	SPECTIVE CONNECT Performance View+	EU; North America	Performance View+	SPECTIVE CONNECT; SPECTIVE radio remote control, small; Belt scale, crusher discharge conveyor; Camera system with upgrade to SPECTIVE CONNECT	Retrofitting at subsidiaries	3074246
MC 110 EVO	K117	SPECTIVE CONNECT Performance View+	EU; North America	Performance View+	SPECTIVE CONNECT; SPECTIVE radio remote control, small; Belt scale, crusher discharge conveyor; Camera system with upgrade to SPECTIVE CONNECT	Retrofitting at subsidiaries	3055926

Original KLEEMANN

PARTS BUNDLES

The 'Parts Bundles' offer a variety of packages of original KLEEMANN spare parts which are available only during a limited promotion period. These bundles enable users to create their own stocks of essential spare parts at an attractively discounted price. Timely ordering of the right parts can minimise costly machine downtimes and significantly increase the efficiency of operational procedures. The parts bundles are an economical way to ensure the immediate availability of essential spare parts whenever they are needed.

> Read more online

PARTS BUNDLES

Series code	Serial code	Series range	Part	Package content	Part no.
MR 110 EVO	K018	137 - 9999	MR 110 EVO2 bundle 1	4 Pcs KRS 40 wear plates_B53; 26 pcs. Wear plate, KRS 40; 18 Pcs KRS 40 wear plates_B21; 16 pcs Hexagon bolt; 88 pcs Hexagon bolt; Retaining washer, 104 pcs; Impact bar, 1; Pressure plate, 300 bar, 1; Impact plate, Mn, 2 pcs; Bolt, 4 pcs; Hexagon nut, 4 pcs; Clamping washer, 4 pcs; Flat scraper element, 1; Flat scraper, 1	WX3327703
			MR 110 EVO2 bundle 2	4 Pcs KRS 40 wear plates_B53; 26 pcs. Wear plate, KRS 40; 18 Pcs KRS 40 wear plates_B21; 16 pcs Hexagon bolt; 88 pcs Hexagon bolt; Retaining washer, 104 pcs; Impact bar, 1; Pressure plate, 300 bar, 1; Bolt, 4 pcs; Hexagon nut, 4 pcs; Clamping washer, 4 pcs; Flat scraper element, 1; Flat scraper, 1; Belt set, 1; Rubber pad, 1; Rubber curtain, 5 pcs	WX3327716
			MR 110 EVO2 bundle 3	4 Pcs KRS 40 wear plates_B53; 26 pcs. Wear plate, KRS 40; 18 Pcs KRS 40 wear plates_B21; 16 pcs Hexagon bolt; 88 pcs Hexagon bolt; Retaining washer, 104 pcs; Impact bar, 1; Pressure plate, 300 bar, 1; Impact plate, Mn, 2 pcs; Bolt, 4 pcs; Hexagon nut, 4 pcs; Clamping washer, 4 pcs; Flat scraper element, 1; Flat scraper, 1; Belt set, 1; Rubber pad, 1; Rubber curtain, 5 pcs; Chain, 7 pcs; ROW/US electrics cabinet set, 1; Service set, 1	WX3327718
	K019	35 - 9999	MR 110 EVO2 bundle 1	4 Pcs KRS 40 wear plates_B53; 26 pcs. Wear plate, KRS 40; 18 Pcs KRS 40 wear plates_B21; 16 pcs Hexagon bolt; 88 pcs Hexagon bolt; Retaining washer, 104 pcs; Impact bar, 1; Pressure plate, 300 bar, 1; Impact plate, Mn, 2 pcs; Bolt, 4 pcs; Hexagon nut, 4 pcs; Clamping washer, 4 pcs; Flat scraper element, 1; Flat scraper, 1	WX3327703
			MR 110 EVO2 bundle 2	4 Pcs KRS 40 wear plates_B53; 26 pcs. Wear plate, KRS 40; 18 Pcs KRS 40 wear plates_B21; 16 pcs Hexagon bolt; 88 pcs Hexagon bolt; Retaining washer, 104 pcs; Impact bar, 1; Pressure plate, 300 bar, 1; Bolt, 4 pcs; Hexagon nut, 4 pcs; Clamping washer, 4 pcs; Flat scraper element, 1; Flat scraper, 1; Belt set, 1; Rubber pad, 1; Rubber curtain, 5 pcs	WX3327716

Original KLEEMANN

PARTS BUNDLES

PARTS BUNDLES					
Series code	Serial code	Series range	Part	Package content	Part no.
MR 110 EVO	K019	35 - 9999	MR 110 EVO2 bundle 3	4 Pcs KRS 40 wear plates_B53; 26 pcs. Wear plate, KRS 40; 18 Pcs KRS 40 wear plates_B21; 16 pcs Hexagon bolt; 88 pcs Hexagon bolt; Retaining washer, 104 pcs; Impact bar, 1; Pressure plate, 300 bar, 1; Impact plate, Mn, 2 pcs; Bolt, 4 pcs; Hexagon nut, 4 pcs; Clamping washer, 4 pcs; Flat scraper element, 1; Flat scraper, 1; Belt set, 1; Rubber pad, 1; Rubber curtain, 5 pcs; Chain, 7 pcs; ROW/US electrics cabinet set, 1; Service set, 1	WX3327718
MR 130 EVO	K077, K078	30 - 9999	MR 130 EVO2 bundle 1	4 Pcs KRS 40 wear plates_B53; 26 pcs. Wear plate, KRS 40; 18 Pcs KRS 40 wear plates_B21; 16 pcs Hexagon bolt; 88 pcs Hexagon bolt; Retaining washer, 104 pcs; Impact bar, 1; Pressure plate, 300 bar, 1; Impact plate, Mn, 2 pcs; Bolt, 4 pcs; Hexagon nut, 4 pcs; Clamping washer, 4 pcs; Flat scraper element, 1; Flat scraper, 1	WX3327696
			MR 130 EVO2 bundle 2	4 Pcs KRS 40 wear plates_B53; 26 pcs. Wear plate, KRS 40; 18 Pcs KRS 40 wear plates_B21; 16 pcs Hexagon bolt; 88 pcs Hexagon bolt; Retaining washer, 104 pcs; Impact bar, 1; Pressure plate, 300 bar, 1; Impact plate, Mn, 2 pcs; Bolt, 4 pcs; Hexagon nut, 4 pcs; Clamping washer, 4 pcs; Flat scraper element, 1; Flat scraper, 1; Belt set, 1; Rubber pad, 1; Rubber curtain, 5 pcs	WX3327698
			MR 130 EVO2 bundle 3	4 Pcs KRS 40 wear plates_B53; 26 pcs. Wear plate, KRS 40; 18 Pcs KRS 40 wear plates_B21; 16 pcs Hexagon bolt; 88 pcs Hexagon bolt; Retaining washer, 104 pcs; Impact bar, 1; Pressure plate, 300 bar, 1; Impact plate, Mn, 2 pcs; Bolt, 4 pcs; Hexagon nut, 4 pcs; Clamping washer, 4 pcs; Flat scraper element, 1; Flat scraper, 1; Belt set, 1; Rubber pad, 1; Rubber curtain, 5 pcs; Chain, 7 pcs; ROW/US electrics cabinet set, 1; Service set, 1	WX3327700

PARTS BUNDLES					
Series code	Serial code	Series range	Part	Package content	Part no.
MR 100 NEO	K136	1 - 9999	Parts bundles Neo 1	4 Pcs KRS 40 wear plates_B53; 18 Pcs KRS 40 wear plates_B21; 6 Pcs KRS 40 wear plates_B22; 8 Pcs Hexagon bolt_B54; Hexagon bolt_B27, 48 pcs; Retaining washer_B26, 56 pcs; Impact bar, 1; Pressure plate, 300 bar, 1; Flat scraper for transfer conveyor, 1; Front scraper for prescreen conveyor, 1; Front scraper for crusher discharge conveyor, 1; Front scraper for fine grain conveyor, 1	WX3285937
			Parts bundles Neo 2	4 Pcs KRS 40 wear plates_B53; 18 Pcs KRS 40 wear plates_B21; 6 Pcs KRS 40 wear plates_B22; 8 Pcs Hexagon bolt_B54; Hexagon bolt_B27, 48 pcs; Retaining washer_B26, 56 pcs; Impact bar, 1; Pressure plate, 300 bar, 1; Front scraper for prescreen conveyor, 1; Front scraper for crusher discharge conveyor, 1; Front scraper for fine grain conveyor, 1; Flat scraper for transfer conveyor, 1; Drive belt, 5 pcs; Rubber curtain, 7 pcs	WX3285938
			Parts bundles Neo 3	4 Pcs KRS 40 wear plates_B53; 18 Pcs KRS 40 wear plates_B21; 6 Pcs KRS 40 wear plates_B22; 8 Pcs Hexagon bolt_B54; Hexagon bolt_B27, 48 pcs; Retaining washer_B26, 56 pcs; Impact bar, 1; Pressure plate, 300 bar, 1; Front scraper for prescreen conveyor, 1; Flat scraper for transfer conveyor, 1; Front scraper for crusher discharge conveyor, 1; Front scraper for fine grain conveyor, 1; Drive belt, 5 pcs; Rubber curtain, 7 pcs; Chain, 1; ROW/UL electrics cabinet set, 1; Service set, 1	WX3285940
MR 100 NEOe	K138	1 - 9999	Parts bundles Neo 1	4 Pcs KRS 40 wear plates_B53; 18 Pcs KRS 40 wear plates_B21; 6 Pcs KRS 40 wear plates_B22; 8 Pcs Hexagon bolt_B54; Hexagon bolt_B27, 48 pcs; Retaining washer_B26, 56 pcs; Impact bar, 1; Pressure plate, 300 bar, 1; Flat scraper for transfer conveyor, 1; Front scraper for prescreen conveyor, 1; Front scraper for crusher discharge conveyor, 1; Front scraper for fine grain conveyor, 1	WX3285937

Original KLEEMANN

PARTS BUNDLES

PARTS BUNDLES					
Series code	Serial code	Series range	Part	Package content	Part no.
MR 100 NEOe	K138	1 - 9999	Parts bundles Neo 2	4 Pcs KRS 40 wear plates_B53; 18 Pcs KRS 40 wear plates_B21; 6 Pcs KRS 40 wear plates_B22; 8 Pcs Hexagon bolt_B54; Hexagon bolt_B27, 48 pcs; Retaining washer_B26, 56 pcs; Impact bar, 1; Pressure plate, 300 bar, 1; Front scraper for prescreen conveyor, 1; Front scraper for crusher discharge conveyor, 1; Front scraper for fine grain conveyor, 1; Flat scraper for transfer conveyor, 1; Drive belt, 5 pcs; Rubber curtain, 7 pcs	WX3285938
			Parts bundles Neo 3	4 Pcs KRS 40 wear plates_B53; 18 Pcs KRS 40 wear plates_B21; 6 Pcs KRS 40 wear plates_B22; 8 Pcs Hexagon bolt_B54; Hexagon bolt_B27, 48 pcs; Retaining washer_B26, 56 pcs; Impact bar, 1; Pressure plate, 300 bar, 1; Front scraper for prescreen conveyor, 1; Flat scraper for transfer conveyor, 1; Front scraper for crusher discharge conveyor, 1; Front scraper for fine grain conveyor, 1; Drive belt, 5 pcs; Rubber curtain, 7 pcs; Chain, 1; ROW/UL electrics cabinet set, 1; Service set, 1	WX3285940
MR 100 NEO	K135	1 - 9999	Parts bundles Neo 1	4 Pcs KRS 40 wear plates_B53; 18 Pcs KRS 40 wear plates_B21; 6 Pcs KRS 40 wear plates_B22; 8 Pcs Hexagon bolt_B54; Hexagon bolt_B27, 48 pcs; Retaining washer_B26, 56 pcs; Impact bar, 1; Pressure plate, 300 bar, 1; Flat scraper for transfer conveyor, 1; Front scraper for prescreen conveyor, 1; Front scraper for crusher discharge conveyor, 1; Front scraper for fine grain conveyor, 1	WX3285937
			Parts bundles Neo 2	4 Pcs KRS 40 wear plates_B53; 18 Pcs KRS 40 wear plates_B21; 6 Pcs KRS 40 wear plates_B22; 8 Pcs Hexagon bolt_B54; Hexagon bolt_B27, 48 pcs; Retaining washer_B26, 56 pcs; Impact bar, 1; Pressure plate, 300 bar, 1; Front scraper for prescreen conveyor, 1; Front scraper for crusher discharge conveyor, 1; Front scraper for fine grain conveyor, 1; Flat scraper for transfer conveyor, 1; Drive belt, 5 pcs; Rubber curtain, 7 pcs	WX3285938

PARTS BUNDLES					
Series code	Serial code	Series range	Part	Package content	Part no.
MR 100 NEO	K135	1 - 9999	Parts bundles Neo 3	4 Pcs KRS 40 wear plates_B53; 18 Pcs KRS 40 wear plates_B21; 6 Pcs KRS 40 wear plates_B22; 8 Pcs Hexagon bolt_B54; Hexagon bolt_B27, 48 pcs; Retaining washer_B26, 56 pcs; Impact bar, 1; Pressure plate, 300 bar, 1; Front scraper for prescreen conveyor, 1; Flat scraper for transfer conveyor, 1; Front scraper for crusher discharge conveyor, 1; Front scraper for fine grain conveyor, 1; Drive belt, 5 pcs; Rubber curtain, 7 pcs; Chain, 1; ROW/UL electrics cabinet set, 1; Service set, 1	WX3285940
MR 100 NEOe	K137	1 - 9999	Parts bundles Neo 1	4 Pcs KRS 40 wear plates_B53; 18 Pcs KRS 40 wear plates_B21; 6 Pcs KRS 40 wear plates_B22; 8 Pcs Hexagon bolt_B54; Hexagon bolt_B27, 48 pcs; Retaining washer_B26, 56 pcs; Impact bar, 1; Pressure plate, 300 bar, 1; Flat scraper for transfer conveyor, 1; Front scraper for prescreen conveyor, 1; Front scraper for crusher discharge conveyor, 1; Front scraper for fine grain conveyor, 1	WX3285937
			Parts bundles Neo 2	4 Pcs KRS 40 wear plates_B53; 18 Pcs KRS 40 wear plates_B21; 6 Pcs KRS 40 wear plates_B22; 8 Pcs Hexagon bolt_B54; Hexagon bolt_B27, 48 pcs; Retaining washer_B26, 56 pcs; Impact bar, 1; Pressure plate, 300 bar, 1; Front scraper for prescreen conveyor, 1; Front scraper for crusher discharge conveyor, 1; Front scraper for fine grain conveyor, 1; Flat scraper for transfer conveyor, 1; Drive belt, 5 pcs; Rubber curtain, 7 pcs	WX3285938
			Parts bundles Neo 3	4 Pcs KRS 40 wear plates_B53; 18 Pcs KRS 40 wear plates_B21; 6 Pcs KRS 40 wear plates_B22; 8 Pcs Hexagon bolt_B54; Hexagon bolt_B27, 48 pcs; Retaining washer_B26, 56 pcs; Impact bar, 1; Pressure plate, 300 bar, 1; Front scraper for prescreen conveyor, 1; Flat scraper for transfer conveyor, 1; Front scraper for crusher discharge conveyor, 1; Front scraper for fine grain conveyor, 1; Drive belt, 5 pcs; Rubber curtain, 7 pcs; Chain, 1; ROW/UL electrics cabinet set, 1; Service set, 1	WX3285940

Original BENNINGHOVEN

LIFTER PLATES

The dryer drums are the key components in the asphalt production process, both for the white mineral and the RAP material. They remove moisture from the raw material and perfectly prepare the material for the processing temperature.

The drums are available in different lengths, diameters and with different built-in materials depending on the system design and the drying matrix (based on the burner, dryer drum, and dust collection).

Influencing parameters such as the plant location, type of rock, material moisture, material temperature and fuel type determine whether lifter plates are used.

Dryer drums are compact, robust and easy to maintain. Made by BENNINGHOVEN.

> Read more online

TECHNICAL SPECIFICATIONS OF THE DRYER DRUM

- Different drum sizes from 8 to 12 metres
- Inside diameter from 2 to 3 metres in various increments
- Appropriate material moisture of 3%, 4%, 5%
- Appropriate compliance of TA-Luft (German technical instructions on air quality control)
- Temperature-resistant internal components (coal dust, mastic asphalt, recycling)
- Frequency converter control (infinitely variable drive for materials with widely varying moisture content)
- Wear material/internal components
- Stainless steel or aluminium covering
- Air or mineral wool insulation

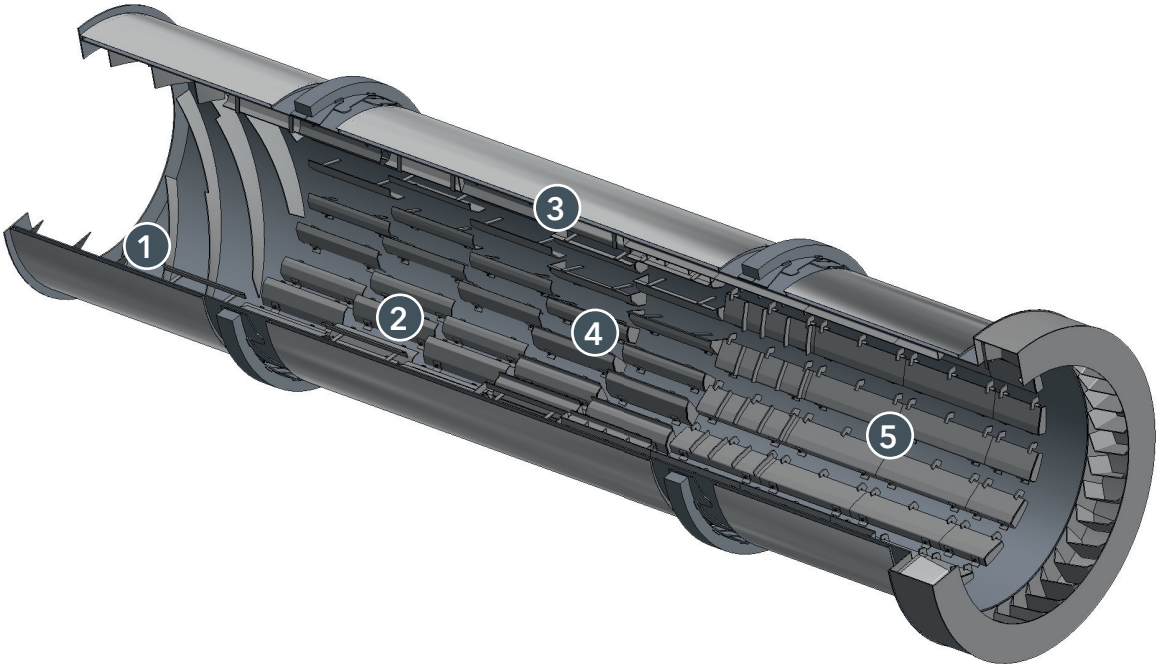

1 Continuous temperature optimisation
Ideal exhaust gas temperature through the installation and removal of lifter plates.

2 Outstanding material quality with maximum flexibility
BENNINGHOVE lifter plates are available in a range of materials and shapes – made of low-wear and temperature-resistant steel or heat-resistant steel (recommended for the addition of cold RAP material and mastic asphalt).

3 First-class drying
Well-designed material guidance thanks to an adapted drum layout plan and optimised placement of the lifter plates results in an optimal material curtain and thus an optimal drying result.

4 Easy to replace
Drum components can be replaced quickly and easily thanks to the bolted design and high-precision fit and genuine connectors.

5 Built-in fire protection
Excellent protection of the drum in the hot zones via fire protection plates (self-protection).

Original BENNINGHOVEN

CHAIN, BUCKET ELEVATOR, GEAR RING

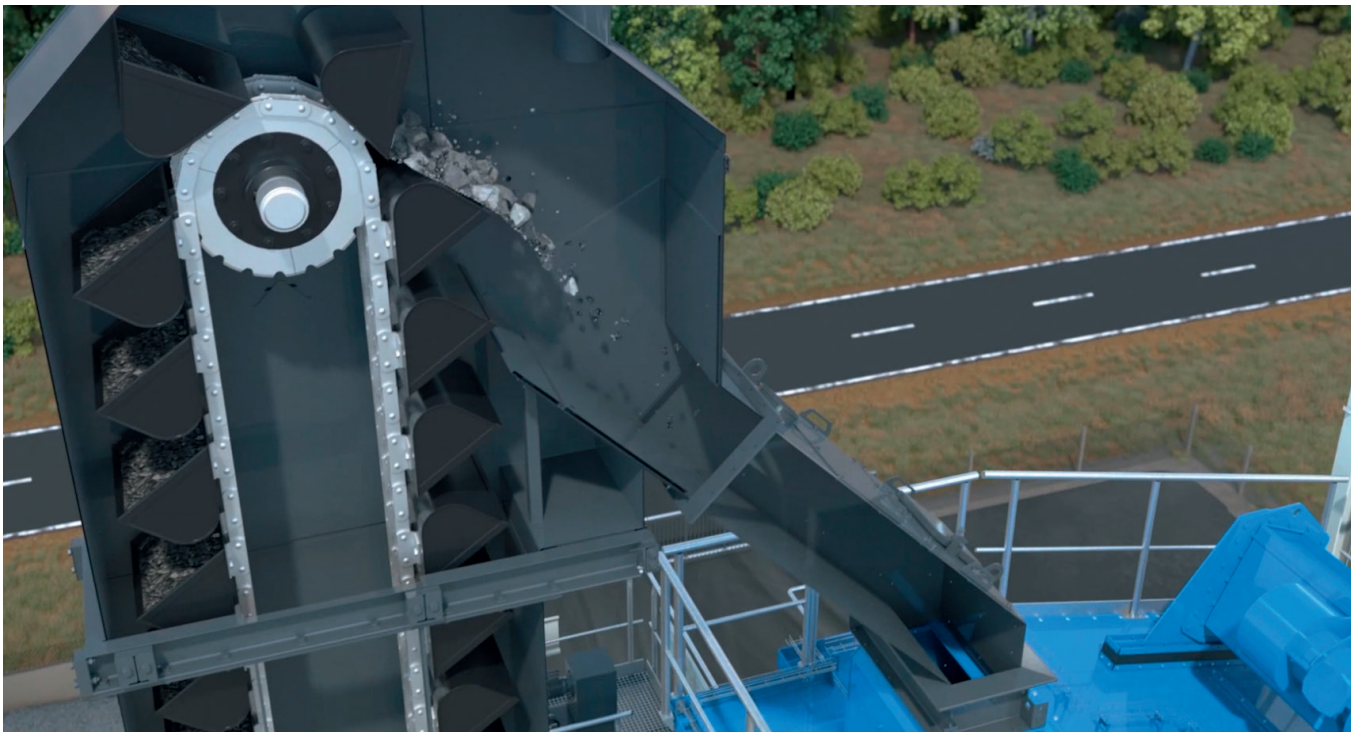

The hot bucket elevator's enclosed, compact steel structure with an internal conveyor mechanism conveys the material vertically up onto the asphalt mixing plant. A high-performance, shaft-mounted geared motor reliably drives the dual-strand, double drag link conveyor chain. For service and maintenance purposes, the geared motor is equipped with a chain anti-reverse mechanism and a key transfer system on the elevator foot. High discharge heights and conveying capacities as well as material temperatures of 400 °C require regular visual inspections or the replacement of wearing parts with genuine BENNINGHOVEN spare parts.

> Read more online

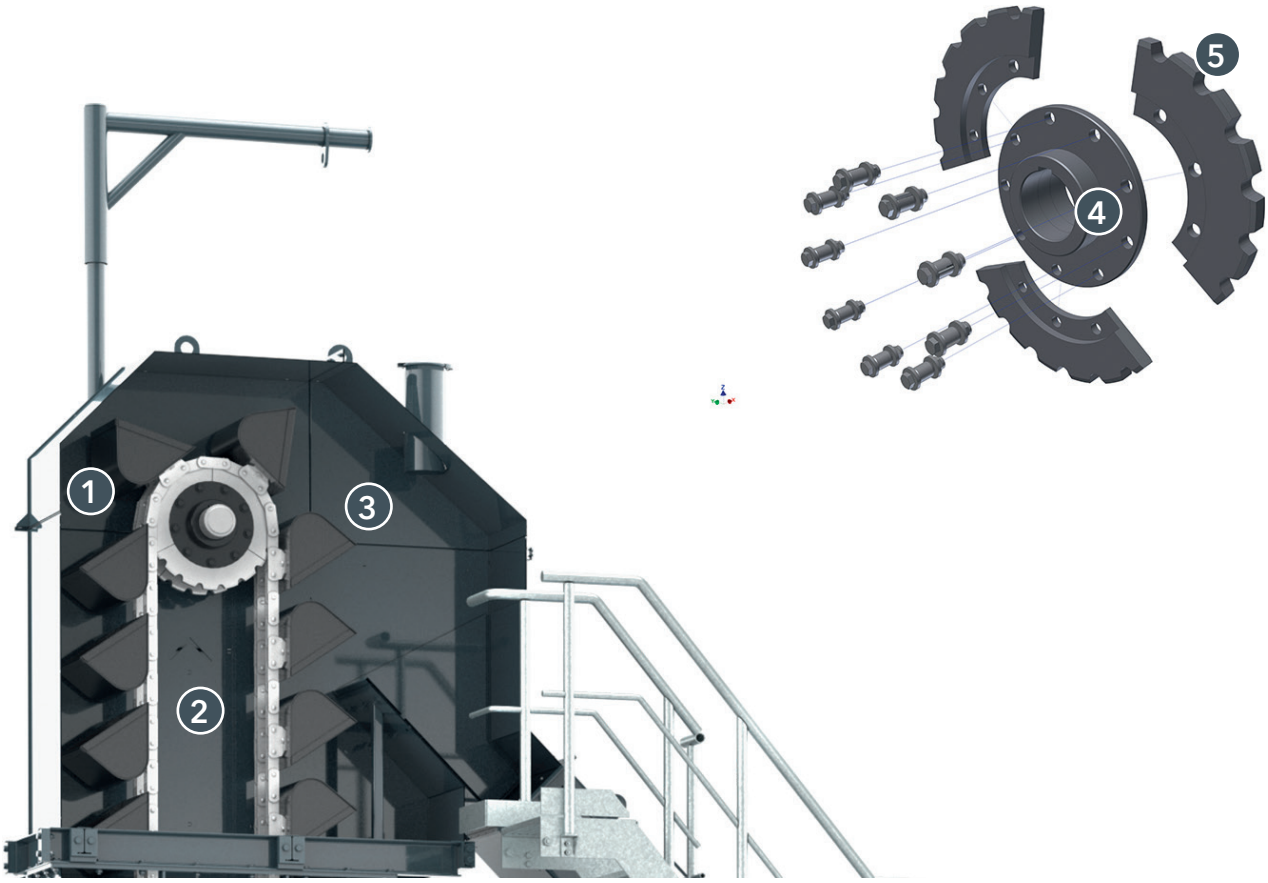

1 **Service-optimised**
The elevator buckets are bolted to the chain, allowing them to be quickly and easily replaced at any time.

2 **Flexible**
Bolt connections ensure that the chain links are easy to replace. The same goes for shortening the chain. The two-strand system facilitates optimal load distribution.

3 **User-friendly**
Easy maintenance and accessibility due to generously sized inspection openings.

4 **Extremely easy to service**
The three-part design of the sprocket allows parts of it to be replaced without requiring removal of the complete sprocket or chain strands and without any special tools.

5 **Durability**
Tempered sprocket segments guarantee maximum wear protection and a long service life.

Original BENNINGHOVEN

INNER PANELS

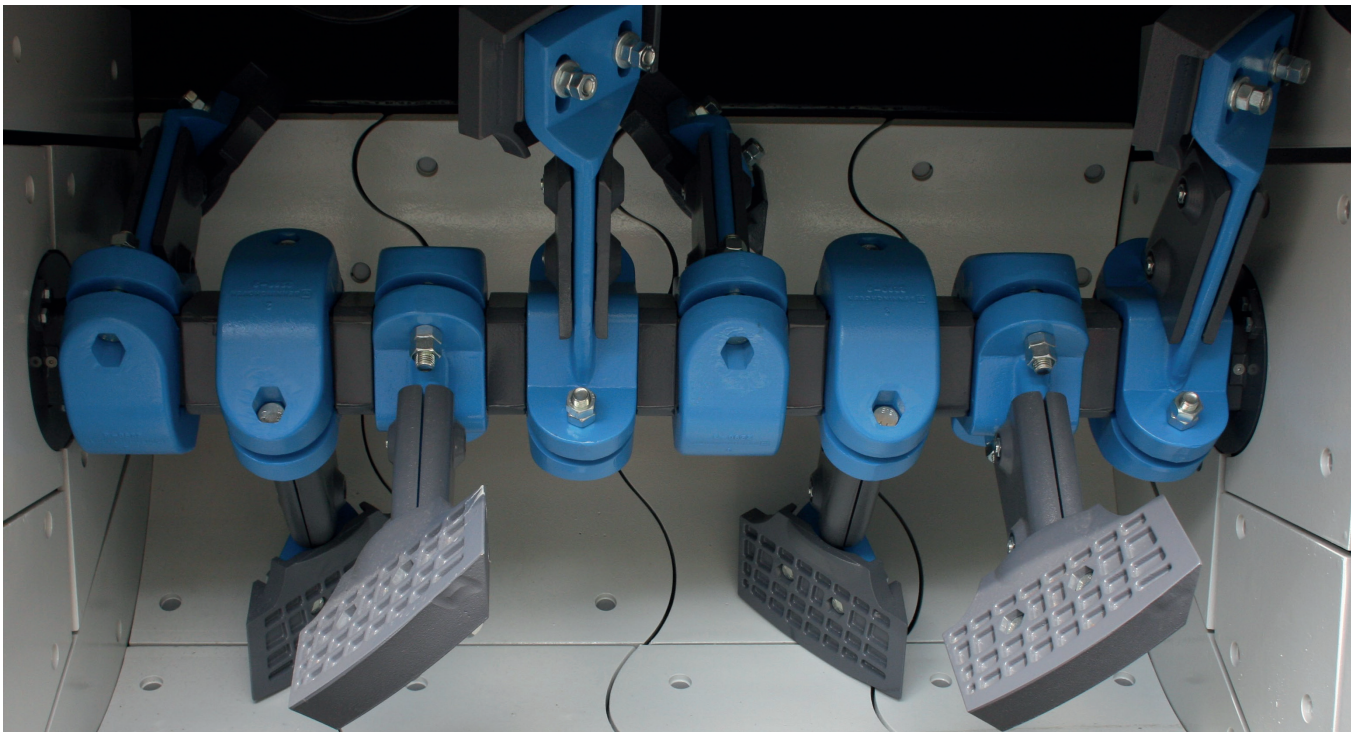

The mixer is the heart of an asphalt mixing plant. This is where the mineral is intensively mixed with the binding agent and filler to form a homogeneous mass. Due to the high loads in terms of wear, weight and power transmission, mixers are built using only materials of the highest quality. The mixing trough of the twin-shaft pugmill is lined with special cast iron. The bolts used to secure the inner panels are accessible from the outside of the unit to make maintenance and service easier. A rotary slide is used to open or close the mixer's outlet flaps via two pneumatic cylinders.

> Read more online

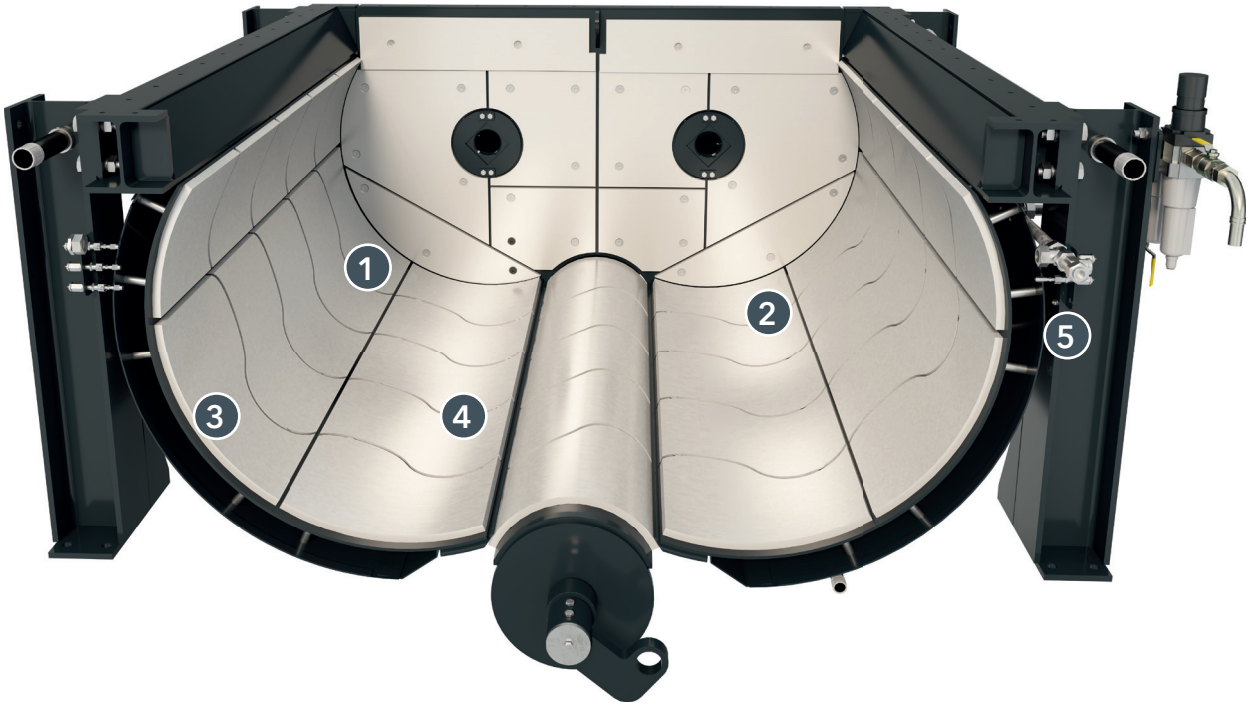

1 **S-shaped trough panels – it's the shape that makes the difference:**
Spot and surface wear is interrupted at the joints, thus ensuring the panels enjoy a longer service life thanks to the S-shape.

2 **Maximum wear protection**
The panels are made from a special alloy for maximum wear protection and a long mixer service life.

3 **Ergonomic handling**
The individual panels feature an ideal size and weight for easy handling.

4 **Individual panels can be easily replaced**
The ability to replace the individual wear zones, which are divided into panels, cuts costs.

5 **Optimal accessibility**
The panels are mounted using countersunk bolts, providing an excellent and secure hold with optimal accessibility from the outside.

Original BENNINGHOVEN

AGITATOR

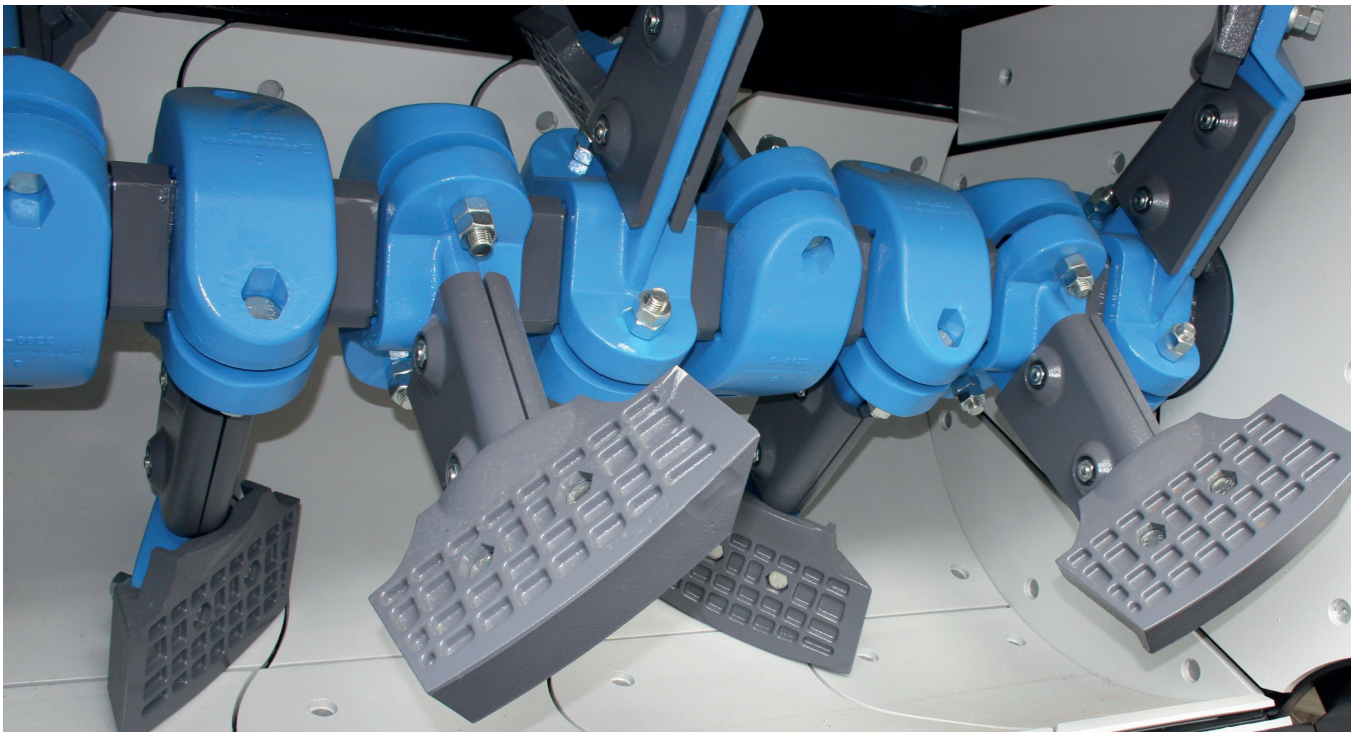

The agitator intensively mixes the mineral with the binding agent and filler to form a homogeneous mass. Due to the high loads in terms of wear, weight and power transmission, mixers are built using only materials of the highest quality. The two agitator shafts are designed for durability and a long service life. Arm guards that protect all the arms from wear, protection for the spaces between the shafts and optimised shapes that reduce the surface area exposed to wear are just a few notable examples.

> Read more online

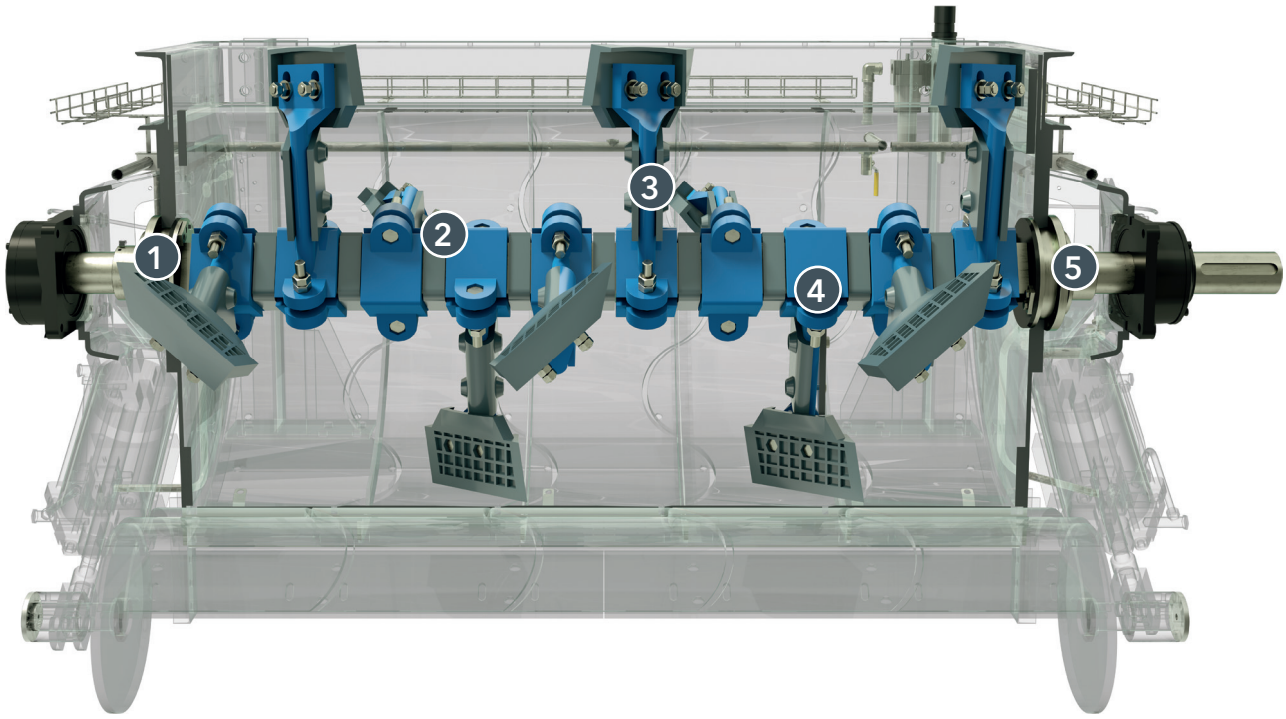

1 **Durable**
Efficient mixer shaft bearing and sealing.

2 **Fewer replacements**
Efficient shaft protection keeps the number of costly replacements of individual shaft sections to a minimum.

3 **Dual arm guard**
Complete protection of the mixer arms against wear.

4 **Minimal wear surfaces**
Perfect mounting of the mixer arms via innovative mounting clamps for longer service life.

5 **Extremely long service life**
Wear is greatly reduced due to the recessed inner seal.

Original BENNINGHOVEN

FILTER BAGS

Dedusting is an essential part of asphalt mixing plant operation. This involves extracting and filtering the dust that is generated during the mixing process – particularly rock particles and bitumen vapours. This not only has an impact on the asphalt mixing process, but is also subject to official regulations governing the emissions produced during asphalt production. These requirements are currently being increasingly tightened in many countries and regions around the world. In response to these developments, BENNINGHOVEN offers the ideal hardware in combination with the corresponding filter cloths – perfectly tailored to each other to form an unbeatable team.

> Read more online

1 **Increase service life, cut costs**
Long service life thanks to solidly sewn bags with triple stitching.

2 **From a single source**
Genuine filter bags from BENNINGHOVEN are perfectly tailored to the asphalt mixing plant's technology and processes. This combination is what leads to a long service life and extreme durability.

3 **Easy handling**
The filter bags are easy to access and replace.

4 **Extremely robust**
Different materials can even withstand high operating temperatures.

WIRTGEN GROUP

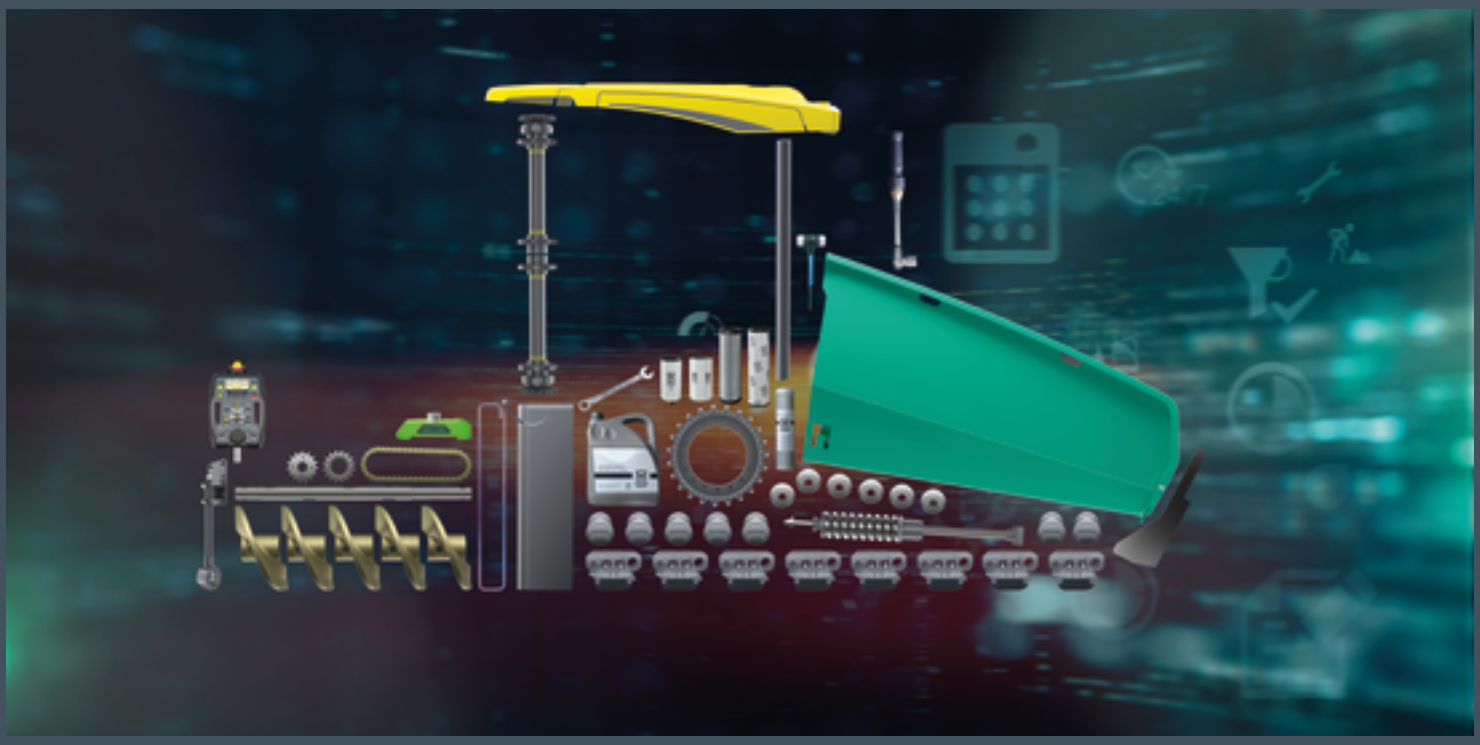

WIRTGEN GROUP
Branch of John Deere GmbH Co. KG
Reinhard-Wirtgen-Str. 2
53578 Windhagen
Germany
T: +49 26 45 / 131 0
F: +49 26 45 / 131 397
customersupport@wirtgen-group.com

parts.wirtgen-group.com

The General Standard Terms and Conditions of Sale and Delivery apply. The Terms and Conditions of Sale and Delivery of the company at which orders are processed can be sent on request. They can also be viewed on the website of the respective company: https://wirtgen-group.com/general-terms
The WIRTGEN GROUP Branch of John Deere GmbH & Co. KG and its affiliated companies protect their intellectual property. In particular, the names WIRTGEN, VÖGELE, HAMM, KLEEMANN, BENNINGHOVEN, CIBER and WITOS, the WIRTGEN GROUP Road logo and numerous other product and system names are registered trademarks in many countries. All details, illustrations and texts are non-binding and may include special equipment. We reserve the right to make technical changes without prior notice. Performance data are dependent upon actual operational conditions.
© **WIRTGEN GROUP Branch of John Deere GmbH & Co. KG** 2026. en-GB – V260123